DCR-VX9000E

RMT-806/807

SERVICE MANUAL

AEP Model
UK Model
E Model

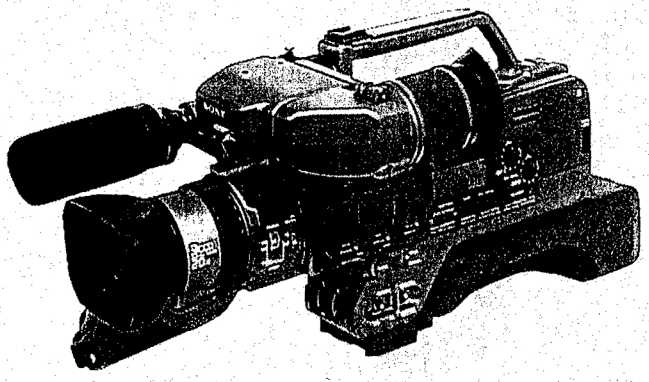

DV Digital Video Cassette

L MECHANISM

SPECIFICATIONS

Digital camcorder recorder

System

Video recording system
Two rotary heads, Helical scanning system
Audio recording system
Rotary heads, PCM system
Video signal
PAL colour, CCIR standards
Usable cassette
DV logo printed cassette
Recording / Playback time (using DV180ME cassette)
3 hours
Fastforward/rewind time
Approx. 4.5 min.
Image device
3 CCD (Charge Coupled Device 1/3")
Viewfinder
Electronic viewfinder: Monochrome
Lens
10x (optical), 20x (digital)
f = 5.9 to 59 mm (1/4 to 2 5/16 inches)
42 to 420 mm (1 5/8 to 16 9/16 inches) when converted into a 35-mm still camera
F = 1.6 to 2.1
Filter diameter 52 mm (2 1/8 inches)
Colour temperature
Auto/Indoors (3200K)/ Outdoors (5800K)
Minimum illumination
4 lx (F 1.6)
Illumination range
4 lx to 100,000 lx
Recommended illumination
More than 100 lux
Shutter speed control
1/3 to 1/10000
Gain control
–3 to 18 dB
Aperture control
F 1.6 to F 11, CLOSE

Input and output connectors

S video output
4-pin mini DIN
Luminance signal: 1 Vp-p, 75 ohm, unbalanced
Chrominance signal: 0.3 Vp-p, 75ohm, unbalanced
Video output
Phono jack, 1 Vp-p, 75 ohm, unbalanced
Audio output
Phono jacks (2: stereo L and R)
327 mV, (at load impedance 47 kilohm) impedance less than 2.2kilohm
RFU DC OUT
Special minijack, DC 5V
Headphone jack
Stereo minijack (ø 3.5 mm)
LANC control jack
Stereo mini-minijack (ø 2.5 mm)
MIC jack
Stereo minijack, 0.388 mV low impedance with 2.5 to 3.0 V DC, output impedance 6.8 kilohm (ø 3.5 mm)
Audio input
Phono jacks (2: stereo L and R)
327 mV, impedance more than 4.7 kilohm
Speaker
Dynamic speaker
DC input
4-pin connector
DV OUT
4-pin special connector
Viewfinder connector
8-pin connector

General

Power requirements
7.2 V (battery pack)
8.4 V (AC power adaptor)
Average power consumption
11.6 W during camera recording
Operating temperature
0°C to 40°C (32°F to 104°F)
Storage temperature
–20°C to +60°C (–4°F to +140°F)
Dimensions (Approx.)
216 x 225 x 470 mm (8 5/8 x 8 7/8 x 18 3/8 inches) (w/h/d)
Mass (Approx.)
3400 g (7 lb 7 oz) excluding the battery pack, lithium battery, cassette, lens cover and shoulder strap
3800 g (8 lb 6 oz) including the battery pack NP-F930, lithium battery CR 2025, cassette DV180ME, lens cover and shoulder strap
Microphone
Stereo type

— Continued on next page —

DIGITAL VIDEO CAMERA RECORDER

SONY®

AC power adaptor

Power requirements
100 - 240 V AC, 50/60 Hz
Power consumption
25 W
Output voltage
DC OUT: 8.4 V, 1.8 A in operating mode
Battery charge terminal: 8.4 V, 1.4 A in charge mode
Application
Sony battery packs NP-F930, NP-F730, NP-720 lithium ion type
Operating temperature
0°C to 40°C (32°F to 104°F)
Storage temperature
–20°C to +60°C (–4°F to +140°F)
Dimensions (Approx.)
56 x 44 x 107 mm (2 3/16 x 1 3/4 x 4 3/16 inches) (w/h/d) including projecting parts and controls
Mass (Approx.)
190 g (6.7 oz)

Design and specifications are subject to change without notice.

Checking supplied accessories

Check that the following accessories are supplied with your digital camcorder.

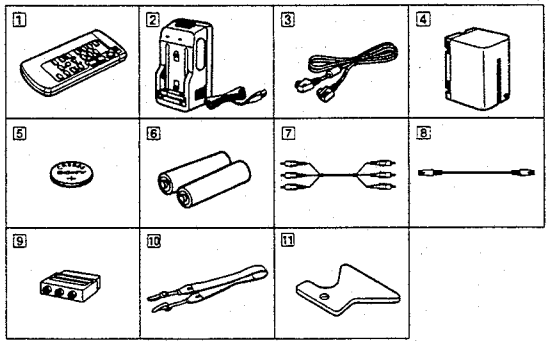

1 Wireless Remote Commander (1)
2 AC-V615 AC power adaptor (1)
3 DK-715 connecting cord (1)
4 NP-F930 Battery pack (1)
5 CR2025 Lithium Battery (1)
The lithium battery is already installed in your digital camcorder.
6 R6 (size AA) battery for Remote Commander (2)
7 A/V connecting cable (1)
8 S video cable (1)
9 21 pin adaptor (1)
10 Shoulder strap (1)
11 Shoulder pad cushion (1)
Affix shoulder pad if necessary.

SAFETY-RELATED COMPONENT WARNING!!

COMPONENTS IDENTIFIED BY MARK ⚠ OR DOTTED LINE WITH MARK ⚠ ON THE SCHEMATIC DIAGRAMS AND IN THE PARTS LIST ARE CRITICAL TO SAFE OPERATION. REPLACE THESE COMPONENTS WITH SONY PARTS WHOSE PART NUMBERS APPEAR AS SHOWN IN THIS MANUAL OR IN SUPPLEMENTS PUB-LISHED BY SONY.

SAFETY CHECK-OUT

After correcting the original service problem, perform the following safety checks before releasing the set to the customer.

1. Check the area of your repair for unsoldered or poorly-soldered connections. Check the entire board surface for solder splashes and bridges.
2. Check the interboard wiring to ensure that no wires are "pinched" or contact high-wattage resistors.
3. Look for unauthorized replacement parts, par-ticularly transistors, that were installed during a previous repair. Point them out to the customer and recommend their replacement.
4. Look for parts which, through functioning, show obvious signs of deterioration. Point them out to the customer and recommend their replace-ment.
5. Check the B+ voltage to see it is at the values specified.
6. Flexible Circuit Board Repairing
   - Keep the temperature of the soldering iron around 270°C during repairing.
   - Do not touch the soldering iron on the same conductor of the circuit board (within 3 times).
   - Be careful not to apply force on the conductor when soldering or unsoldering.

TABLE OF CONTENTS

SERVICE NOTE 7

1. GENERAL

Getting started
- Attaching the viewfinder 1-1
- Charging and installing the battery pack 1-1
- Inserting a cassette 1-3

Basic operations
- Camera recording 1-4
- Hints for better shooting 1-7
- Checking the recorded picture 1-8
- Connections for playback 1-9
- Playing back a tape 1-10

Advanced operations
- Using alternative power sources 1-12
- Changing the mode settings 1-13
- Overlapping two pictures 1-15
- Using the wide mode function 1-16
- Photo recording 1-17
- Interval recording 1-17
- Cut recording 1-19
- Selecting automatic or manual mode 1-20
- Focusing manually 1-21
- Adjusting the aperture 1-22
- Adjusting the shutter speed 1-23
- Adjusting the gain 1-25
- Tips for manual adjustment 1-26
- Adjusting the white balance 1-27
- Using the ND filter 1-29
- Using the zebra pattern 1-29
- Adjusting the recording sound 1-30
- Releasing the STEADY SHOT function 1-31
- Making a custom preset 1-32
- Re-recording a picture in the middle of a recorded tape 1-33
- Searching the recorded picture 1-34
- Displaying recording data 1-35
- Editing onto another tape 1-35
- Audio dubbing 1-36

Additional information
- Changing the lithium battery in the digital camcorder 1-37
- Resetting the date and time 1-38
- Notes on video cassettes 1-39
- Tips for using the battery pack 1-40
- Maintenance information and precautions 1-42
- Using your digital camcorder abroad 1-44
- Identifying the parts 1-45
- Warning indicators 1-53

2. DISASSEMBLY

2-1. REMOVAL OF EVF BLOCK 2-1
2-2. REMOVAL OF EVF CABINET 2-2
2-3. REMOVAL OF CRT BLOCK 2-3
2-4. REMOVAL OF VF-105 BOARD 2-3
2-5. REMOVAL OF EM-10 BOARD 2-4
2-6. REMOVAL OF PAD TERMINAL (1) 2-4
2-7. REMOVAL OF PAD TERMINAL (2) 2-5
2-8. REMOVAL OF SJ-15, RT-21, BOARD AND PAD TERMINAL (3) 2-5
2-9. REMOVAL OF LH-10 BOARD 2-6
2-10. REMOVAL OF PAD FRAME 2-6
2-11. REMOVAL OF CABINET (R) BLOCK 2-7
2-12. REMOVAL OF SW-286 AND ED-44 BOARDS 2-7
2-13. REMOVAL OF CONTROL PANEL ASSEMBLY (1) 2-8
2-14. REMOVAL OF CONTROL PANEL ASSEMBLY (2) 2-8
2-15. REMOVAL OF AM-38 AND FK-68 BOARDS 2-9
2-16. REMOVAL OF MECHANISM BLOCK (1) 2-9
2-17. REMOVAL OF MECHANISM BLOCK (2) 2-10
2-18. REMOVAL OF VK-41P BOARD 2-10
2-19. REMOVAL OF LENS BLOCK 2-11
2-20. REMOVAL OF LD-86, CD-160 AND SE-56 BOARDS 2-11
2-21. REMOVAL OF ZOOM LENS ASSEMBLY 2-12
2-22. REMOVAL OF FS-78 BOARD 2-12
2-23. REMOVAL OF MA-280 AND GP-14 BOARDS 2-13
2-24. REMOVAL OF AU-192 BOARD 2-13
2-25. REMOVAL OF JC-15P BOARD 2-14
2-26. REMOVAL OF RS-73 BOARD 2-14
2-27. REMOVAL OF MG-16, CB-54P AND DD-75P BOARDS 2-15
2-28. REMOVAL OF EJ-27, LI-60, JK-149, DV-27 AND DS-74 BOARDS 2-15
2-29. REMOVAL OF GRIP ASSEMBLY 2-16
2-30. REMOVAL OF CONTROL (ZK4520) SWITCH BLOCK 2-16
2-31. INTERNAL VIEWS 2-17
2-32. CIRCUIT BOARDS LOCATION 2-19

3. BLOCK DIAGRAMS

3-1. OVERALL BLOCK DIAGRAM (1) 3-1
3-2. OVERALL BLOCK DIAGRAM (2) 3-3
3-3. OVERALL BLOCK DAIGRAM (3) 3-5
3-4. OVERALL BLOCK DIAGRAM (4) 3-7
3-5. OVERALL BLOCK DIAGRAM (5) 3-9
3-6. POWER BLOCK DIAGRAM (1) 3-11
3-7. POWER BLOCK DIAGRAM (2) 3-13
3-8. POWER BLOCK DIAGRAM (3) 3-15

4. PRINTED WIRING BOARDS AND SCHEMATIC DIAGRAMS

4-1. FRAME SCHEMATIC DIAGRAM 4-1
4-2. PRINTED WIRING BOARDS AND SCHEMATIC DIAGRAMS 4-5
- JC-15P (1/7)(VIDEO CORE 1) SCHEMATIC DIAGRAM 4-5
- JC-15P (2/7)(VIDEO CORE 2) SCHEMATIC DIAGRAM 4-9
- JC-15P (3/7)(VIDEO CORE 3) SCHEMATIC DIAGRAM 4-11
- JC-15P (4/7)(MODE CONTROL) SCHEMATIC DIAGRAM 4-13
- JC-15P (5/7)(AUDIO) SCHEMATIC DIAGRAM 4-16
- JC-15P (6/7)(HI CONTROL) SCHEMATIC DIAGRAM 4-19
- JC-15P (7/7) (DV INPUT/OUTPUT), DV-27 (DV TERMINAL) SCHEMATIC DIAGRAM 4-22
- DV-27 (DV TERMINAL) PRINTED WIRING BOARD 4-25
- JC-15P (MAIN) PRINTED WIRING BOARD 4-27
- CD-160 (CCD IMAGER) PRINTED WIRING BOARD 4-32
- CD-160 (CCD IMAGER) SCHEMATIC DIAGRAM 4-35

· SE-56 (STEADY SHOT SENSOR) SCHEMATIC DIAGRAM 4-37
· SE-56 (STEADY SHOT SENSOR) PRINTED WIRING BOARD 4-38
· LD-86 (LENS DRIVE) PRINTED WIRING BOARD 4-40
· LD-86 (LENS DRIVE) SCHEMATIC DIAGRAM ·· 4-43
· MG-16 (MAGIC) SCHEMATIC DIAGRAM 4-46
· MG-16 (MAGIC) PRINTED WIRING BOARD 4-49
· CB-54P (MAIN) PRINTED WIRING BOARD 4-51
· CB-54P (1/3)(CAMERA) SCHEMATIC DIAGRAM 4-56
· CB-54P (2/3)(BASE BAND) SCHEMATIC DIAGRAM 4-61
· CB-54P (3/3)(VIDEO OUTPUT) SCHEMATIC DIAGRAM 4-64
· RS-73 (1/2)(MECHANIAM CONTROL) SCHEMATIC DIAGRAM 4-67
· RS-73 (2/2)(SERVO CONTROL), MD-70 (TAPE SENSOR) SCHEMATIC DIAGRAMS 4-71
· MD-70 (TAPE SENSOR) PRINTED WIRING BOARD 4-75
· RS-73 (MECHANISM/SERVO CONTROL) PRINTED WIRING BOARD 4-77
· FK-68 (CONTROL PANEL) PRINTED WIRING BOARD 4-80
· FK-68 (CONTROL PANEL), ED-44 (EDIT SEARCH SWITCH), AM-38 (SHUTTER SPEED SWITCH), SW-286 (POWER SWITCH) SCHEMATIC DIAGRAMS 4-83
· ED-44 (EDIT SEARCH SWITCH), AM-38 (SHUTTER SPEED SWITCH), SW-286 (POWER SWITCH) PRINTED WIRING BOARDS 4-86
· AU-192 (1/2)(AUDIO), JK-149 (VIDEO/AUDIO OUTPUT TERMINAL), EM-10 (MIC JACK), MA-280 (MIC AMP) SCHEMATIC DIAGRAMS 4-89
· AU-192 (2/2)(AUDIO SELECT), EJ-27 (EJECT SWITCH), GP-14 (BUZZER), HR-11 (REMOTE SENSOR 2), SJ-15 (AUDIO INPUT TERMINAL), LH-10 (HEADPHONE JACK), RT-21 (RENOTE SENSOR 1), VK-41P (PLAYER SWITCH), FS-78 (START/STOP SWITCH), LI-60 (LITHIUM BATTERY), VF-105 (EVF CONNECTOR) SCHEMATIC DIAGRAMS 4-94
· VF-105 (EVF CONNECTOR), LI-60 (LITHIUM BATTERY) PRINTED WIRING BOARDS 4-99
· AU-192 (AUDIO) PRINTED WIRING BOARD 4-101
· JK-149 (VIDEO/AUDIO OUTPUT), EM-10 (MIC JACK), MA-260 (MIC AMP) PRINTED WIRING BOARDS 4-106
· EJ-27 (EJECT SWITCH), GP-14 (BUZZER), HR-11 (REMOTE SENSOR 2), SJ-15 (AUDIO INPUT TERMINAL), LH-10 (HEADPHONE JACK), RT-21 (REMOTE SENSOR 1), VK-41P (PLAYER SWITCH), FS-78 (START/STOP SWITCH) PRINTED WIRING BOARDS 4-111
· DD-75P (POWER), DS-74 (DC IN) PRINTED WIRING BOARDS 4-115
· DD-75P (POWER), DS-74 (DC IN) SCHEMATIC DIAGRAMS 4-119

5. REPAIR PARTS LIST

5-1. EXPLODED VIEWS 5-1
5-1-1. OVERALL-1 SECTION 5-1
5-1-2. OVERALL-2 SECTION 5-2
5-1-3. CABINET (R) SECTION 5-3
5-1-4. EVF SECTION 5-4
5-1-5. MAIN BOARD SECTION 5-5
5-1-6. POWER BOARD SECTION 5-6
5-1-7. GRIP SECTION 5-7
5-1-8. CABINET (L) SECTION 5-8
5-1-9. MAIN FRAME SECTION 5-9
5-1-10. CCD BOARD SECTION 5-10
5-1-11. ZOOM LENS SECTION 5-11
5-1-12. CASSETTE COMPARTMENT BLOCK SECTION 5-12
5-1-13. MECHANISM CHASSIS BLOCK (1) SECTION ··· 5-13
5-1-14. MECHANISM CHASSIS BLOCK (2) SECTION ··· 5-14
5-2. ELECTRICAL PARTS LIST 5-15

6. ADJUSTMENTS

6-1. CAMERA SECTION ADJUSTMENT 6-1
1-1. PREPARATIONS BEFORE ADJUSTMENT 6-1
1-1-1. List of service tools 6-1
1-1-2. Preparations 6-5
1-1-3. Precautions 6-6
1. Switch settings 6-6
2. Adjustment sequence 6-6
3. Subject 6-6
1-1-4. Adjustment remote commander (RM-95 upgraded) ···· 6-7
1. Using the adjustment remote commander 6-7
2. Precautions when using the adjustment remote commander 6-8
1-1-5. Page F address list 6-9
1-1-6. Page E address list 6-12
1-2. CAMERA SYSTEM ADJUSTMENTS 6-13
1-2-1. Adjustment points when major parts have been replaced 6-13
1-2-2. Power supply voltage check (DD-75P board) 6-13
1-2-3. Initialization of Pages E and F data 6-14
1-2-4. Modification of Page F data 6-14
1-2-5. Modification of Page E data 6-14
1-2-6. 28MHz crystal oscillator adjustment (CB-54P board) 6-15
1-2-7. Zoom center value preset 6-15
1-2-8. V SUB adjustment 6-16
1-2-9. VRG adjustment 6-17
1-2-10. HALL adjustment 6-18
1-2-11. Offset check and adjustment 6-20
1-2-12. Flange back adjustment and temperature data reading 6-21
1-2-13. Flange back check 6-22
1-2-14. Picture frame setting 6-23
1-2-15. Auto white balance reference data input 6-24
1-2-16. IRIS IN/OUT adjustment 6-25
1-2-17. MAX GAIN adjustment 6-26
1-2-18. White balance adjustment with ND filter correction 6-27
1-2-19. Auto white balance adjustment 6-28
1-2-20. Color reproduction adjustment (ND filter OFF) 6-29
1-2-21. Color reproduction adjustment (ND filter ON) 6-30
1-2-22. Velocity sensor sensitivity adjustment 6-31
1-3. W/B ELECTRONIC VIEWFINDER SYSTEM ADJUSTMENTS 6-33
1-3-1. Power supply voltage check 6-33
1-3-2. Horizontal tilt adjustment 6-34
1-3-3. Focus adjustment 6-34
1-3-4. Centering adjustment 6-34
1-3-5. Free run frequency adjustment 6-35
1-3-6. H size adjustment 6-35
1-3-7. Anode voltage adjustment 6-35
1-3-8. Scan size check 6-35
1-3-9. Heater voltage adjustment 6-35
1-3-10. V size adjustment 6-36
1-3-11. V linearity adjustment 6-36
1-3-12. Brightness adjustment 6-36
1-3-13. 16 : 9 V size adjustment 6-36
6-2. MECHANICAL SECTION ADJUSTMENT 6-39
2-1. PREPARATION FOR CHECK, ADJUSTMENT AND REPLACEMENT OF MECHANISM 6-39
1-1. Cassette compartment block assembly 6-39
1. Removal (Refer to Fig. 6-2-1) 6-39
2. Notes on re-assembling 6-39
1-2. How to perform loading and unloading while the cassette compartment block assembly is removed. 6-40
1. Using a regulated power supply 6-40
2. Manual loading and unloading : After removing the cam motor 6-40
2-2. PERIODIC INSPECTION AND MAINTENANCE ITEMS 6-41
2-1. Cleaning of rotary drum 6-41
2-2. Cleaning of tape running path (Refer to Fig. 6-2-4.) ···· 6-41
2-3. Periodic inspection item 6-42
2-4. Service jig list 6-42
2-5. How to operate the mode selector II 6-44
2-5-1. Introduction 6-44
1. Manual test 6-44
2. Step test 6-44
3. Auto test 6-44
2-5-2. Operation 6-45
1. Operation flow chart 6-45
2. Turn on the power of the mode selector II 6-45
3. Turn off the power of the mode selector II 6-45
4. Selecting mechanism type 6-46
5. Selecting mode 6-46
6. MANUAL test 6-46
7. STEP test 6-46
8. AUTO test 6-46
9. Battery alarm message 6-47
2-3. CHECK, ADJUSTMENT AND REPLACEMENT PROCEDURE OF MECHANISM BLOCK 6-48
3-1. Timing belt and capstan cover 6-48
1. Removal 6-48
2. Notes when re-assembling 6-48
3-2. Drum cap, pinch arm assembly, drum assembly, tape support, HC block assembly and TG2 6-49
1. Removal 6-49
2. Notes when re-assembling 6-49
3-3. Capstan motor, RH base block assembly, pendulum arm assembly and dew condensation sensor 6-50
1. Removal 6-50
2. Notes when re-assembling 6-50
3-4. TG1 arm block assembly and TG7 block assembly 6-51
1. Removal 6-51
2. Notes when re-assembling 6-51
3-5. Reel table (S) assembly and reel table (T) assembly ···· 6-52
1. Removal 6-52
2. Notes when re-assembling 6-52
3-6. S brake block assembly, T brake block assembly, sub slider and FWD stopper 6-53
1. Removal 6-53
2. Notes when re-assembling 6-53
3-7. GL gear (S) block assembly, GL gear (T) assembly, coaster (S) block assembly and coaster (T) block assembly 6-54
1. Removal 6-54
2. Notes when re-assembling 6-54
3-8. Cam motor assembly, sub slider driving lever, main cam gear and joint gear 6-55
1. Removal 6-55
2. Notes when re-assembling 6-55
3-9. Pinch slider, sub cam gear, loading driving lever and encoder gear 6-57
1. Removal 6-57
2. Notes when re-assembling 6-57
3-10. Mode slider, slider arm assembly, relay gear and tension pulley 6-58
1. Removal 6-58
2. Notes when re-assembling 6-58
3-11. Tension arm assembly and MD board 6-59
1. Removal 6-59
2. Notes when re-assembling 6-59
2-4. ADJUSTMENTS AND CHECKS 6-60
4-1. ADJUSTMENT POSITION 6-60
4-2. ADJUSTMENT ORDER 6-61
4-3. ADJUSTMENT AND CHECK METHOD 6-62
4-3-1. REEL TABLE T HEIGHT CHECK 6-62
1. Preparation before check 6-62
2. Checking 6-62
4-3-2. TG7 HEIGHT ADJUSTMENT 6-63
1. Preparation before adjustment 6-63
2. Adjustment 6-63
4-3-3. FWD/RVS POSITION ADJUSTMENT 6-63
1. Preparation before adjustment 6-63
2. Adjustment 6-63
4-3-4. TG2 HEIGHT ADJUSTMENT 6-64
1. Preparation before adjustment 6-64
2. Adjustment 6-64
4-3-5. TG3/TG6 HEIGHT AND INCLINATION ADJUSTMENTS 6-65
1. Preparation before adjustment 6-65
2. Adjustment 6-65
4-3-6. FWD/RVS BACK TENSION ADJUSTMENT 6-66
1. Preparation before adjustment 6-66
2. Adjustment 6-66
4-3-7. PREPARATION FOR ADJUSTMENT AND RF WAVEFORM CHECK 6-67
4-3-8. TRACKING ADJUSTMENT 6-68
4-3-9. TRACKING CHECK 6-69
4-3-10. CUE AND REV CHECK 6-70
4-3-11. RISING CHECK 6-71
4-3-12. TAPE PATH CHECK 6-72
6-3. VIDEO SECTION ADJUSTMENT 6-73
3-1. PREPARATIONS BEFORE ADJUSTMENT 6-73
3-1-1. Equipments to be used 6-73

3-1-2. Precautions in adjustments 6-73
3-1-3. Adjustment connector (RS-73P board CN775) 6-74
3-1-4. Connecting the equipment 6-75
3-1-5. Output level and impedance 6-75
3-2. SERVICE MODE 6-76
3-2-1. Setting the TEST mode and VTR & CAM mode ON 6-76
3-2-2. Emergency memory address 6-77
3-2-3. EMG code (Emergency code) 6-78
3-2-4. MSW code 6-78
3-2-5. Key input check 6-79
3-2-6. Key input check (A/D port) 6-80
3-2-7. LCD display check (FK-68 board) 6-80
3-2-8. Buzzer check 6-81
3-2-9. Use history check 6-81
3-2-10. Oscillating frequency check (DD-75P board) 6-81
3-2-11. Power supply voltage check (DD-75P board) 6-82
3-3. SYSTEM CONTROL ADJUSTMENT 6-83
3-3-1. Initialization of Page D 6-83
3-3-2. Initialization of Page C data 6-83
3-3-3. Page D address list 6-84
3-3-4. ID board threshold level adjustment (JC-15P board) 6-85
3-3-5. Battery down adjustment 6-86
3-4. SERVO SYSTEM ADJUSTMENTS 6-87
3-4-1. Switching position adjustment (RS-73P board) 6-87
3-5. VIDEO SYSTEM ADJUSTMENTS 6-90
3-5-1. RF block adjustment (RS-73P board) 6-90
1. Record current adjustment/ frequency response check 6-90
2. PLL fo adjustment (RS-73P board) 6-91
3. CLK DELAY adjustment (RS-73P board) 6-92
4. AGC center level adjustment (RS-73P board) 6-93
5. PLL capture range adjustment (RS-73P board) 6-94
6. AEQ adjustment (RS-73P board) 6-95
3-5-2. Base band block adjustment 6-96
1. EVR data preset 6-96
2. AFC fo adjustment (CB-54P board) 6-96
3. NPS fo adjustment (CB-54P board) 6-97
4. D/A V Reference adjustment (CB-54P board) 6-97
5. S-Y output sync level adjustment (CB-54P board) 6-98
6. S-Y output level adjustment (CB-54P board) 6-98
7. S-C output chroma level adjustment (CB-54P board) 6-99
8. S-C output burst level adjustment (CB-54P board) 6-99
9. Encoder R-Y input level adjustment (CB-54P board) 6-100
10. Composite output level adjustment (CB-54P board) 6-100
11. Encoder sharpness adjustment (CB-54P board) 6-101
12. EVF ZEBRA slice level adjustment/check 6-102
3-5-3. JC core block board adjustment 6-102
1. 13.5 MHz crystal oscillator adjustment (JC-15P board) 6-102
3-6. AUDIO SYSTEM ADJUSTMENT 6-103
3-6-1. Preparation 6-103
1. Switch setting 6-103
2. Connection of audio measuring equipment 6-103
3-6-2. Audio system adjustment. 6-104
1. Audio PLL VCO oscillating frequency check (JC-15P board) 6-104
2. Oscillating frequency check (JC-15P board) 6-104
3. Playback level check 6-104
4. EXT MIC input gain and L/R balance check 6-104
5. LINE input distortion factor check 6-105
6. LINE input noise level check 6-105
7. LINE input separation check 6-105
8. Audio after-recording playback check 6-105

* The color reproduction frame is shown after the page of ARRANGEMENT DIAGRAM FOR ADJUSTMENT PARTS.

• Procedure to remove a cassette when the main power cannot be turned on. (Forced EJECT)

① Apply +5Vdc to the loading motor from a regulated power supply.

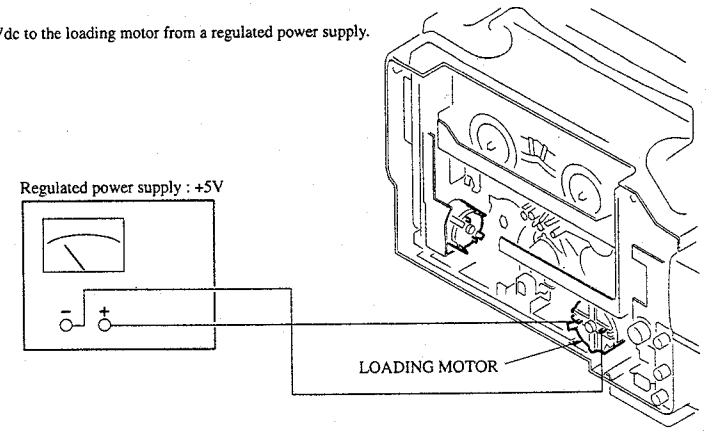

② Apply +5Vdc to the cassette control motor from a regulated power supply.

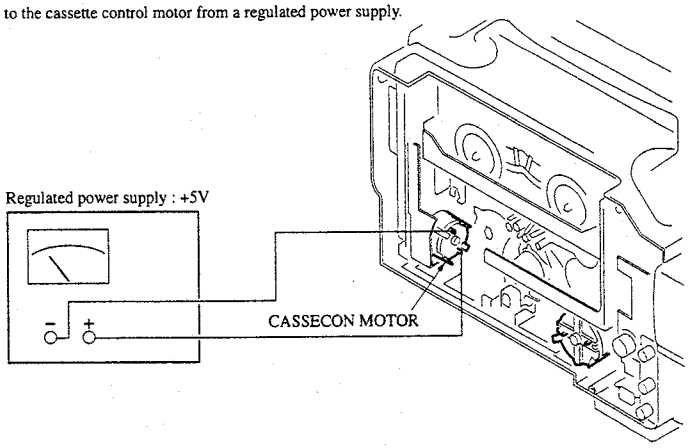

Attaching the viewfinder

Before using the digital camcorder, attach the viewfinder.

(1) Loosen the viewfinder release ring.
(2) Slide the viewfinder onto the attaching plate.
(3) Adjust the position of the viewfinder, then tighten the viewfinder release ring.
(4) Attach the 8 pin connector to the VIEW FINDER jack on the digital camcorder. Match ridge on 8 pin connector to the ridge on the jack.

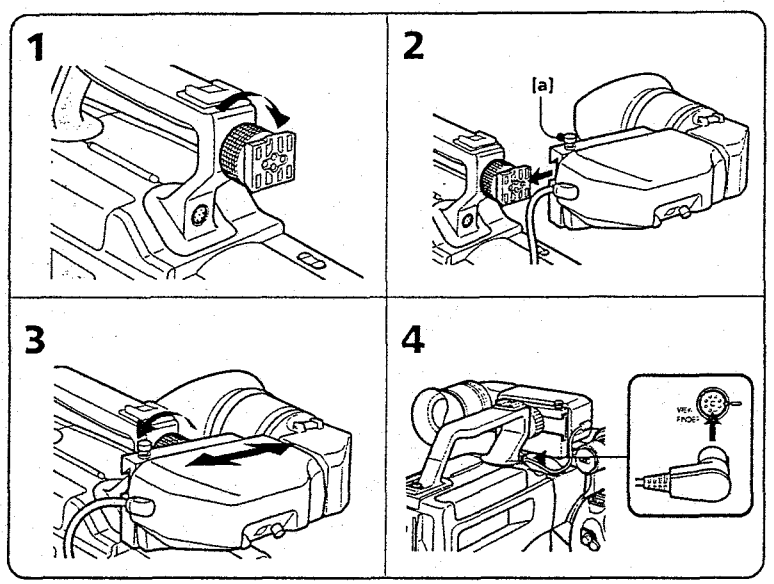

Note on the VIEW FINDER jack
This VIEW FINDER jack is specially designed for this digital camcorder. Do not connect anything else to this VIEW FINDER jack.

To remove the viewfinder

Loosen viewfinder release ring. Then pull stopper **[a]** up, and while holding, slide viewfinder off the attaching plate.

Fijación del visor

Antes de utilizar la videocámara digital, fíjele el visor.

(1) Afloje el anillo de liberación del visor.
(2) Deslice el visor dentro de la placa de fijación.
(3) Ajuste la posición del visor, y después apriete el anillo de liberación del mismo.
(4) Inserte el conector de 8 contactos en el conector VIEW FINDER de la videocámara digital. Haga coincidir la cresta del conector de 8 contactos con la hendidura del conector de la videocámara digital.

Nota sobre el conector VIEW FINDER
Este conector VIEW FINDER ha sido especialmente diseñado para esta videocámara digital. No conecte nada más en este conector VIEW FINDER.

Para extraer el visor

Afloje el anillo de liberación del visor. Después tire del retén **[a]** hacia arriba y, sujetándolo, deslice el visor para separarlo de la placa de fijación.

Charging and installing the battery pack

Before using your digital camcorder, you first need to charge and install the battery pack. To charge the battery pack, use the supplied AC-V615 AC power adaptor.
This digital camcorder does not interface with "InfoLITHIUM" batteries. Battery time indication does not appear when using "InfoLITHIUM" batteries.

Charging the battery pack

Charge the battery pack on a flat surface without vibration.

(1) Connect the mains lead to the AC power adaptor.
(2) Align the surface of the battery pack indicated by the ▶ mark with the edge of the terminal shutter of the AC power adaptor. Then fit and slide the battery pack in the direction of the arrow.
(3) Connect the AC power cord to the mains. The CHARGE lamp (orange) lights up. Charging begins.

When the CHARGE lamp goes out, **normal charge** is completed. For **full charge**, which allows you to use the battery longer than usual, leave the battery pack in place for approximately one hour. Unplug the unit from the mains, then remove the battery pack and install it into the digital camcorder. You can also use the battery pack before it is completely charged.

Carga e instalación de la batería

Antes de utilizar su videocámara digital, tendrá que cargar e instalar la batería. Para cargar la batería, utilice el adaptador de alimentación de CA AC-V615 suministrado.
La videocámara digital carece de interfaz para baterías "InfoLITHIUM". Cuando utilice baterías "InfoLITHIUM", no aparecerá la indicación del tiempo de la batería.

Carga de la batería

Cargue la batería en una superficie plana exenta de vibraciones.

(1) Conecte el cable de alimentación al adaptador de alimentación de CA.
(2) Alinee la superficie de la batería, indicada con la marca ▶, con el borde del obturador de terminales del adaptador de alimentación de CA. Después encaje y deslice la batería en el sentido de la flecha.
(3) Conecte el adaptador de alimentación de CA en un tomacorriente. Se encenderá la lámpara CHARGE (anaranjada). Se iniciará la carga.

Cuando se apague la lámpara CHARGE, habrá finalizado la **carga normal**. Para realizar la **carga completa**, que le permitirá utilizar la batería más tiempo del normal, déjela así durante aproximadamente una hora. Desenchufe el adaptador de alimentación de CA del tomacorriente, quite la batería, e instálela en la videocámara digital. Usted también podrá utilizar la batería antes de que se haya cargado completamente.

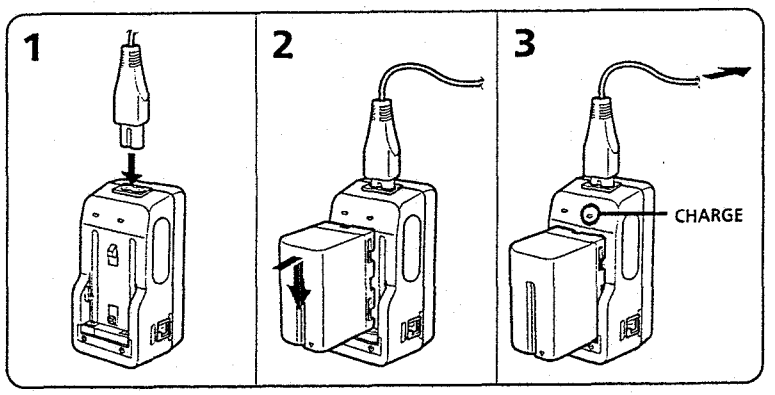

This section is extracted from instruction manual. (AEP, UK model)

Charging and installing the battery pack

Charging time

Battery pack	Charging time* (min.)
NP-F930 (supplied)	300 (240)
NP-F730	250 (190)
NP-720	250 (190)

The time required for a normal charge is indicated in parentheses.

* Approximate minutes to charge an empty battery pack using the supplied AC power adaptor. (Lower temperatures require a longer charging time.)

Battery life

Battery pack	Continuous recording time*	Typical recording time**
NP-F930 (supplied)	120 (110)	75(70)
NP-F730	80 (75)	50 (45)
NP-720	80 (75)	50 (45)

Numbers in parentheses indicate the time when you use a normally charged battery.
Battery life will be shorter if you use the digital camcorder in a cold environment.

* Approximate continuous recording time indoors.

** Approximate minutes when recording while you repeat recording start/stop, zooming and turning the power on/off. The actual battery life may be shorter.

Carga e instalación de la batería

Tiempo de carga

Batería	Tiempo de carga* (min.)
NP-F930 (suministrada)	300 (240)
NP-F730	250 (190)
NP-720	250 (190)

El tiempo requerido para la carga normal se indica entre paréntesis.

* Minutos aproximados para cargar una batería descargada utilizando el adaptador de alimentación de CA suministrado. (A bajas temperaturas, la carga tardará más.)

Duración de la batería

Batería	Tiempo de videofilmación continua*	Tiempo de videofilmación típica**
NP-F930 (suministrada)	120 (110)	75 (70)
NP-F730	80 (75)	50 (45)
NP-720	80 (75)	50 (45)

Los números entre paréntesis indican el tiempo cuando utilice una batería normalmente cargada.
La duración de la batería será más corta si utiliza la videocámara digital en un ambiente frío.

* Tiempo aproximado de videofilmación continua en interiores.

** Minutos aproximados cuando videofilme repitiendo las operaciones de inicio/parada, utilización del zoom, y conexión/desconexión de la alimentación. La duración real de la batería puede ser más corta.

To remove the battery pack

Slide the battery pack in the direction of the arrow.

Para extraer la batería

Deslícela en el sentido de la flecha.

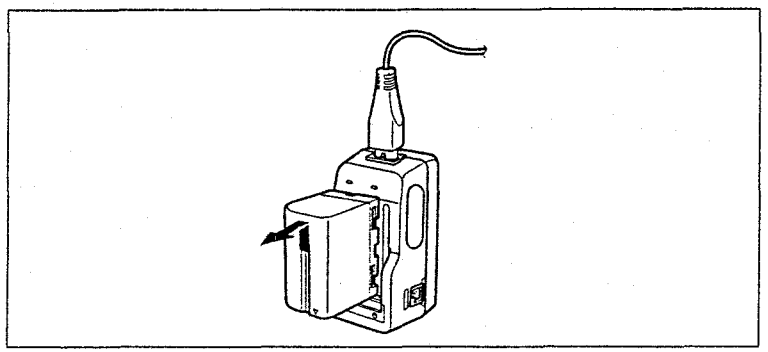

Notes on charging the battery pack

- The CHARGE lamp will remain lit for a while even if the battery pack is removed and the mains lead is unplugged after charging the battery pack. This is normal.
- If the CHARGE lamp does not light, disconnect the mains lead. After about one minute, reconnect the mains lead again.
- When operating the digital camcorder using the AC power adapter, you cannot charge the battery pack.
- When a fully charged battery pack is installed, the CHARGE lamp will light once, then go out.

Notas sobre la carga de la batería

- La lámpara CHARGE permanecerá encendida durante un momento aunque haya extraído la batería, y haya desenchufado el cable de alimentación, después de haber finalizado la carga. Esto es normal.
- Si la lámpara CHARGE no se enciende, desconecte el cable de alimentación. Después de aproximadamente un minuto, vuelva a conectar el cable de alimentación.
- Cuando utilice la videocámara digital utilizando el adaptador de alimentación de CA, no podrá cargar la batería.
- Cuando instale una batería completamente cargada, la lámpara CHARGE se encenderá y después se apagará.

Charging and installing the battery pack

Installing the battery pack

Insert the battery pack in the direction of the ▼ mark on the battery pack. Slide the battery pack down until it catches on the BATT lever and clicks.

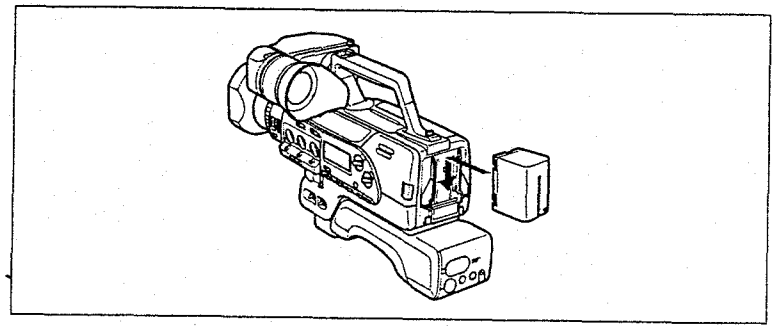

To remove battery pack

While pressing BATT, lift the battery pack out in the direction of the arrow.

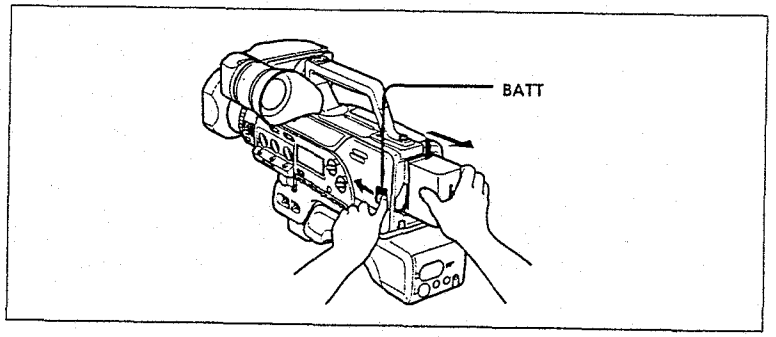

Carga e instalación de la batería

Instalación de la batería

Inserte la batería en el sentido de la marca ▼ de la misma. Deslice la batería hacia abajo hasta que quede enganchada en la palanca BATT y chasquee.

Para extraer la batería

Manteniendo presionada BATT, levante la batería en el sentido de la flecha.

Inserting a cassette

Use a DV cassette with DV logo* only.
Make sure that a power source is installed.
We recommend you set the POWER switch to ON before inserting the cassette.
(1) Open the cassette compartment cover.
(2) Insert a cassette (not supplied) with the tab upwards, and the window facing out and press down so that the cassette loads.
(3) Close the cover.

Note on the cassette

Mini DV cassettes with Mini DV logo cannot be used.

* DV is a trademark.

Inserción de un videocassette

Utilice solamente un videocassette DV con el logotipo DV*.
Cerciórese de que haya una fuente de alimentación conectada.
Recomendamos que ponga el interruptor POWER en ON antes de insertar el videocassette.
(1) Abra la tapa del compartimiento del videocassette.
(2) Inserte un videocassette (no suministrado) con la ventanilla hacia afuera y presiónelo apara que se cargue.
(3) Cierre la tapa.

Nota sobre los videocassettes

No es posible utilizar minicassettes con el logotipo Mini DV.

* DV es marca comercial.

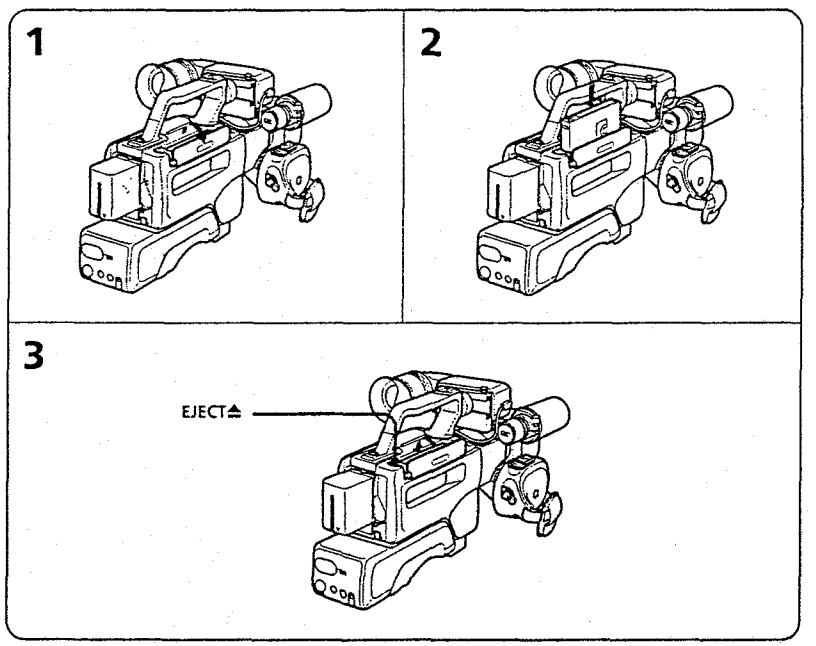

Inserting a cassette

To eject the cassette

Open the cassette compartment cover and press ⏏. After the cassette rises, take out the cassette, then close the cover.
You cannot eject the cassette while C MEMORY appears in the viewfinder because the digital camcorder is still writing information into the cassette memory. After C MEMORY disappears the cassette automatically rises.
When ejecting the cassette, never close the cassette compartment cover until the cassette is completely removed.

To prevent accidental erasure

Slide the tab on the cassette to expose the red mark. If you insert the cassette with the red mark exposed and close the cassette compartment, the beeps sound, the and ⏏ indicators flash in the viewfinder and display window, and you cannot record.
To re-record on this tape, slide the tab back out, covering the red mark.

Inserción de un videocassette

Para extraer el videocassette

Abra la tapa del compartimiento del videocassette y presione ⏏. Después de que se haya levantado el videocassette, extraiga éste y cierre la tapa.
Usted no podrá extraer el videocassette mientras en el visor esté indicándose C MEMORY, porque la videocámara digital estará escribiendo todavía información en la memoria del videocassette. Después de que C MEMORY haya desaparecido, el videocassette se levantará automáticamente.
Cuando extraiga el videocassette, no cierre nunca la tapa del compartimiento del videocassette hasta haber extraído completamente el videocassette.

Para evitar el borrado accidental

Deslice la lengüeta del videocassette de forma que la marca roja quede al descubierto. Si inserta un videocassette con la marca roja al descubierto en el com partimiento del videocassette sonará un pitido, en el visualizador parpadearán los indicadores y ⏏, y no podrá grabar.
Para volver a grabar en este videocassette, deslice la lengüeta hacia afuera para cubrir la marca roja.

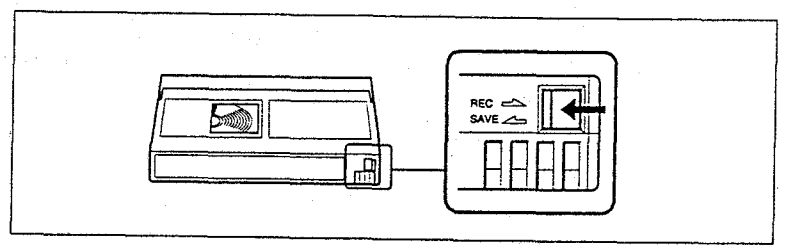

Basic operations
Camera recording

Make sure that the power source is installed and a cassette is inserted and that AUTO LOCK is set to ON. When AUTO LOCK is set to ON, all settings are automatically adjusted to best suit your shooting environment. Before you record one-time events, you may want to make a trial recording to make sure that the digital camcorder is working correctly.
When you use the digital camcorder for the first time, power on it and reset the date and time to your time before you start recording (p. 83).

(1) Remove the lens hood cap, and attach it to the grip strap.
(2) Set the POWER switch to ON.
(3) Set CAMERA/PLAYER to CAMERA.
(4) Turn STANDBY up to STANDBY.
(5) Press START/STOP.
The digital camcorder starts recording. The "REC" indicator appears and the red lamp lights up in the viewfinder. The tally lamps located on the front and rear also light up.

Operaciones básicas
Videofilmación

Cerciórese de que la fuente de alimentación esté instalada, de que haya un videocassette insertado, y de que AUTO LOCK esté en ON. Al poner AUTO LOCK en ON, se realizarán automáticamente todos los ajustes de acuerdo con el ambiente de videofilmación. Antes de realizar videofilmaciones irrepetibles, le aconsejamos que realice una prueba para ver si la videocámara digital está funcionando correctamente.
Antes de utilizar la videocámara digital por primera vez, conecte su alimentación, y ajuste la fecha y la hora (pág. 83).

(1) Quite la tapa de la visera del objetivo y fíjela a la correa de la empuñadura.
(2) Ponga el interruptor POWER en ON.
(3) Ponga CAMERA/PLAYER en CAMERA.
(4) Gire STANDBY hacia arriba hasta STANDBY.
(5) Presione START/STOP.
La videocámara digital comenzará a grabar. En el visor aparecerá el indicador "REC" y se encenderá una lámpara roja. También se encenderán las lámparas indicadoras situadas en las partes frontal y posterior.

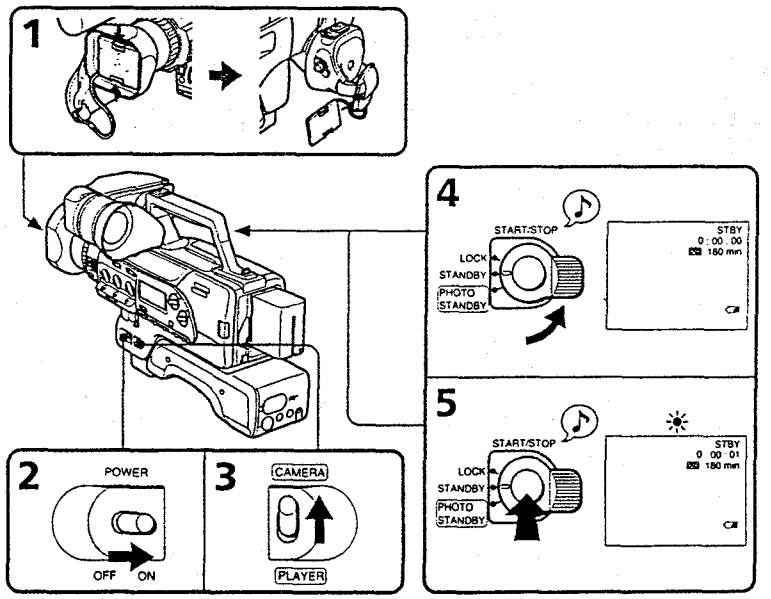

Charging and installing the battery pack

Installing the battery pack

Insert the battery pack in the direction of the ▼ mark on the battery pack. Slide the battery pack down until it catches on the BATT lever and clicks.

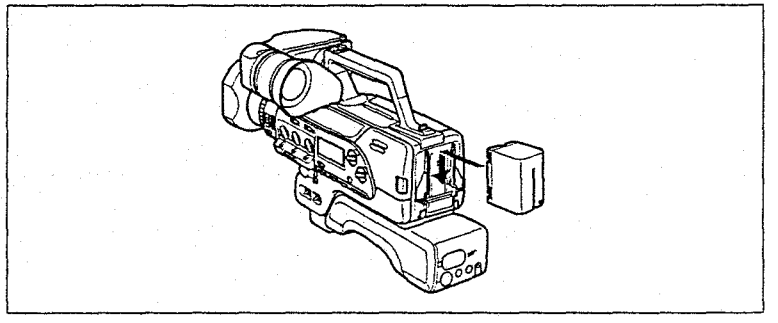

To remove battery pack

While pressing BATT, lift the battery pack out in the direction of the arrow.

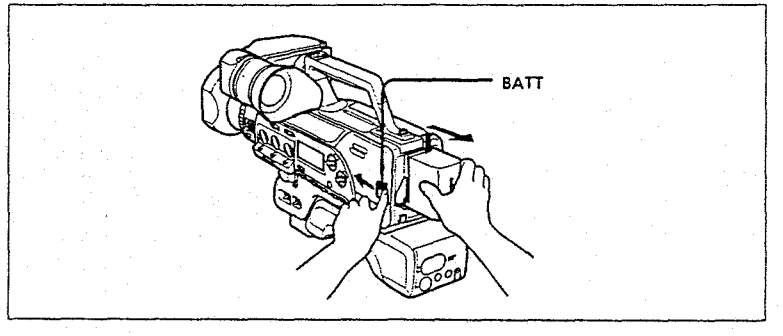

Carga e instalación de la batería

Instalación de la batería

Inserte la batería en el sentido de la marca ▼ de la misma. Deslice la batería hacia abajo hasta que quede enganchada en la palanca BATT y chasquee.

Para extraer la batería

Manteniendo presionada BATT, levante la batería en el sentido de la flecha.

Inserting a cassette

Use a DV cassette with DV logo* only.
Make sure that a power source is installed.
We recommend you set the POWER switch to ON before inserting the cassette.
(1) Open the cassette compartment cover.
(2) Insert a cassette (not supplied) with the tab upwards, and the window facing out and press down so that the cassette loads.
(3) Close the cover.

Note on the cassette

Mini DV cassettes with Mini DV logo cannot be used.

* DV is a trademark.

Inserción de un videocassette

Utilice solamente un videocassette DV con el logotipo DV*.
Cerciórese de que haya una fuente de alimentación conectada.
Recomendamos que ponga el interruptor POWER en ON antes de insertar el videocassette.
(1) Abra la tapa del compartimiento del videocassette.
(2) Inserte un videocassette (no suministrado) con la ventanilla hacia afuera y presiónelo apara que se cargue.
(3) Cierre la tapa.

Nota sobre los videocassettes

No es posible utilizar minicassettes con el logotipo Mini DV.

* DV es marca comercial.

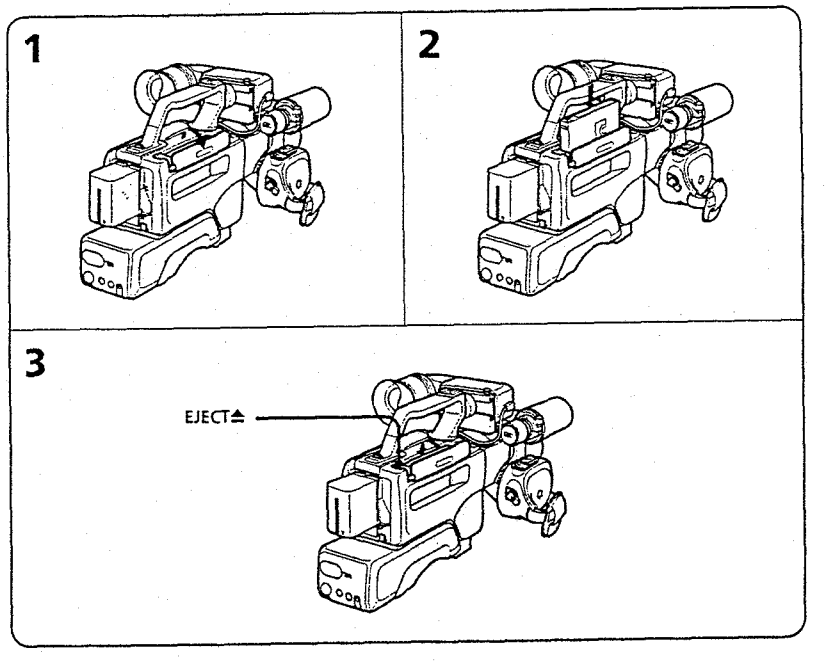

Inserting a cassette

To eject the cassette

Open the cassette compartment cover and press ⏏. After the cassette rises, take out the cassette, then close the cover.
You cannot eject the cassette while C MEMORY appears in the viewfinder because the digital camcorder is still writing information into the cassette memory. After C MEMORY disappears the cassette automatically rises.
When ejecting the cassette, never close the cassette compartment cover until the cassette is completely removed.

To prevent accidental erasure

Slide the tab on the cassette to expose the red mark. If you insert the cassette with the red mark exposed and close the cassette compartment, the beeps sound, the 📼 and ⏏ indicators flash in the viewfinder and display window, and you cannot record.
To re-record on this tape, slide the tab back out, covering the red mark.

Inserción de un videocassette

Para extraer el videocassette

Abra la tapa del compartimiento del videocassette y presione ⏏. Después de que se haya levantado el videocassette, extraiga éste y cierre la tapa.
Usted no podrá extraer el videocassette mientras en el visor esté indicándose C MEMORY, porque la videocámara digital estará escribiendo todavía información en la memoria del videocassette. Después de que C MEMORY haya desaparecido, el videocassette se levantará automáticamente.
Cuando extraiga el videocassette, no cierre nunca la tapa del compartimiento del videocassette hasta haber extraído completamente el videocassette.

Para evitar el borrado accidental

Deslice la lengüeta del videocassette de forma que la marca roja quede al descubierto. Si inserta un videocassette con la marca roja al descubierto en el com partimiento del videocassette sonará un pitido, en el visualizador parpadearán los indicadores 📼 y ⏏, y no podrá grabar.
Para volver a grabar en este videocassette, deslice la lengüeta hacia afuera para cubrir la marca roja.

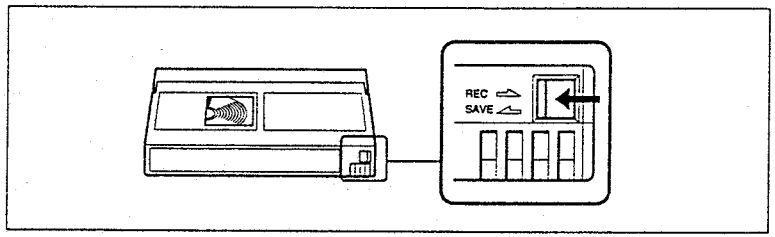

Basic operations
Camera recording

Make sure that the power source is installed and a cassette is inserted and that AUTO LOCK is set to ON. When AUTO LOCK is set to ON, all settings are automatically adjusted to best suit your shooting environment. Before you record one-time events, you may want to make a trial recording to make sure that the digital camcorder is working correctly.
When you use the digital camcorder for the first time, power on it and reset the date and time to your time before you start recording (p. 83).

(1) Remove the lens hood cap, and attach it to the grip strap.
(2) Set the POWER switch to ON.
(3) Set CAMERA/PLAYER to CAMERA.
(4) Turn STANDBY up to STANDBY.
(5) Press START/STOP.
The digital camcorder starts recording. The "REC" indicator appears and the red lamp lights up in the viewfinder. The tally lamps located on the front and rear also light up.

Operaciones básicas
Videofilmación

Cerciórese de que la fuente de alimentación esté instalada, de que haya un videocassette insertado, y de que AUTO LOCK esté en ON. Al poner AUTO LOCK en ON, se realizarán automáticamente todos los ajustes de acuerdo con el ambiente de videofilmación. Antes de realizar videofilmaciones irrepetibles, le aconsejamos que realice una prueba para ver si la videocámara digital está funcionando correctamente.
Antes de utilizar la videocámara digital por primera vez, conecte su alimentación, y ajuste la fecha y la hora (pág. 83).

(1) Quite la tapa de la visera del objetivo y fíjela a la correa de la empuñadura.
(2) Ponga el interruptor POWER en ON.
(3) Ponga CAMERA/PLAYER en CAMERA.
(4) Gire STANDBY hacia arriba hasta STANDBY.
(5) Presione START/STOP.
La videocámara digital comenzará a grabar. En el visor aparecerá el indicador "REC" y se encenderá una lámpara roja. También se encenderán las lámparas indicadoras situadas en las partes frontal y posterior.

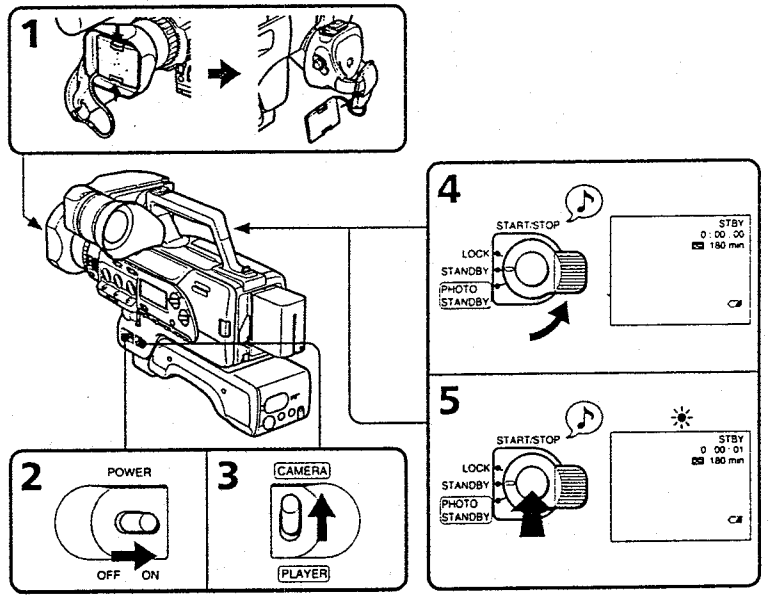

Camera recording

- The upper side **[a]** of the power zoom indicator shows the digital zooming zone, and the lowerside **[b]** shows the optical zooming zone. If you set the D ZOOM function to OFF, the **[a]** zone disappears.

Videofilmación

- La parte superior **[a]** del indicador del zoom motorizado mostrará la zona digital del zoom, y la inferior **[b]** la zona óptica del mismo. Si ajusta la función D ZOOM a OFF, la zona **[a]** desaparecerá.

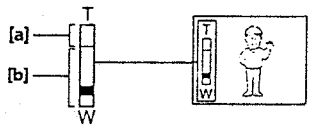

Hints for better shooting

When shooting with the digital camcorder on your shoulder, you'll get better results by holding the digital camcorder according to the following suggestions:

- Place the digital camcorder on your shoulder and secure it with the grip strap so that you can easily manipulate the controls with your thumb.
- To adjust the grip, loosen the grip screw with a coin, rotate the grip, and then tighten the screw. The grip can be rotated 5° up or down.

Sugerencias para videofilmar mejor

Cuando videofilme con la videocámara digital al hombro, obtendrá mejores resultados si la sujeta de acuerdo con las sugerencias siguientes.

- Coloque la videocámara digital sobre su hombro y asegúrela con la correa de la empuñadura de forma que pueda accionar fácilmente los controles con su pulgar.
- Para ajustar la empuñadura, afloje el tornillo de la misma con una moneda, y después apriételo. La empuñadura podrá girarse 5° hacia arriba o hacia abajo.

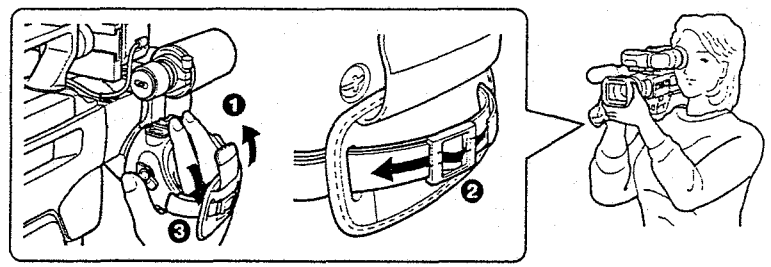

- Place your right elbow against your side.
- Place your left hand under the digital camcorder to support it. Be sure to not touch the built-in microphone.
- Place your eye firmly against the viewfinder eyecup.
- Use the viewfinder frame as a guide to determine the horizontal plane.

- Apoye el codo derecho contra su costado.
- Coloque la mano izquierda debajo de la videocámara digital para sostenerla. Tenga cuidado de no tocar el micrófono incorporado.
- Coloque el ojo firmemente contra el ocular del visor.
- Utilice el cuadro del visor como guía para determinar el plano horizontal.

Hints for better shooting

- You can also record in a low position to get an interesting angle. Lift the viewfinder up for recording from a low position **[a]**.
- While recording in a low position, you can use the front START/STOP button **[b]**.
- You can rotate the viewfinder 120° up and 90° down. This is useful when recording in a high or low position **[c]**.

Sugerencias para videofilmar mejor

- Usted también podrá videofilmar en posición baja para obtener un ángulo interesante. Para videofilmar en posición baja, levante el visor **[a]**.
- Cuando videofilme en posición baja, podrá utilizar la tecla START/STOP frontal **[b]**.
- Usted podrá girar el visor 120° hacia arriba y 90° hacia abajo. Esto será muy útil para videofilmar en posición alta o baja **[c]**.

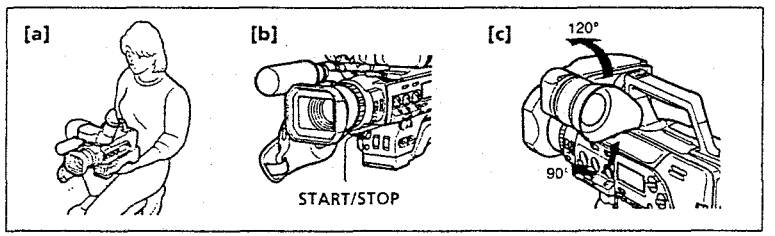

- You can move the viewfinder up to about 30 mm (1 3/16 inches) laterally. Turn the lock ring to release the viewfinder, and then move it. Turn back the lock ring to fix the viewfinder in place **[d]**.
- You can move the viewfinder up to about 30 mm (1 3/16 inches) lengthwise. Turn the lock lever under the viewfinder to release it, and then move the viewfinder. Turn back the lock lever to fix the viewfinder in place **[e]**.
- To change the position of the shoulder pad, loosen the two screws under the shoulder pad and move the shoulder pad **[f]**. Then tighten the screws well.

- Usted podrá mover lateralmente el visor hasta 30 mm. Gire el anillo de bloqueo para liberar el visor, y después muévalo. Para fijar el visor en su lugar, gire el anillo de bloqueo en sentido contrario **[d]**.
- Usted podrá mover longitudinalmente el visor unos 30 mm. Gire la palanca de bloqueo situada debajo del visor para liberar éste, y después muévalo. Para fijar el visor, gire la palanca en sentido contrario **[e]**.
- Para cambiar la posición de la almohadilla para el hombro, afloje los dos tornillos situados debajo de la misma y muévala **[f]**. Después apriete bien los tornillos.

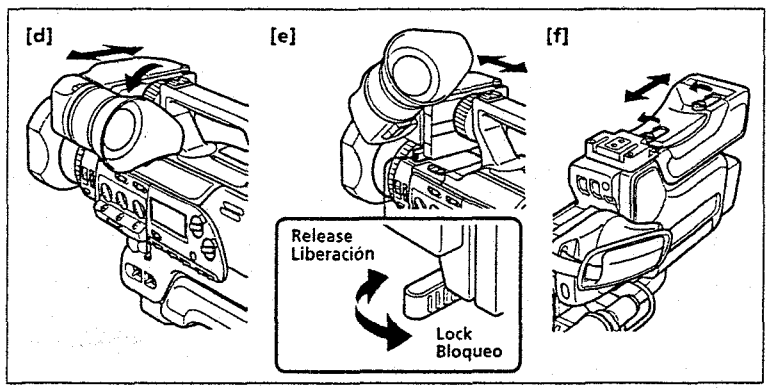

Hints for better shooting

Place the digital camcorder on a flat surface or use a tripod

Try placing the digital camcorder on a table top or any other flat surface of suitable height. If you have a tripod for a still camera, you can also use it with the digital camcorder.
When attaching a non-Sony tripod, make sure that the length of the tripod screw is less than 6.5 mm (9/32 inch). Otherwise, the screw may damage the inner parts of the digital camcorder.

Caution on carrying

Do not pick up the digital camcorder by anything other than the grip or handle **[g]**.

Caution on the viewfinder

Do not place the digital camcorder so as to point the viewfinder toward the sun. The inside of the viewfinder may be damaged.
Be careful when placing the digital camcorder under sunlight or by a window **[h]**.

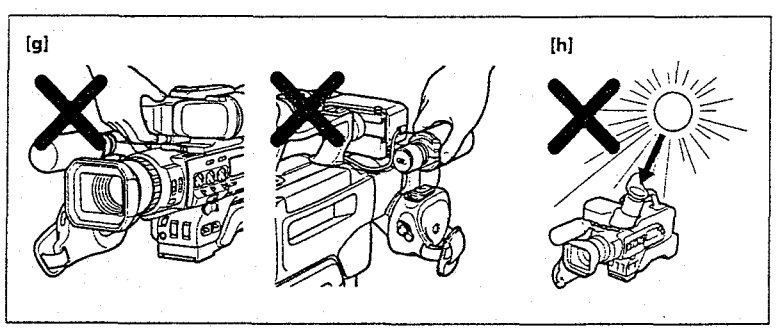

Note on the viewfinder

When attaching the video light (not supplied) to the accessory shoe, do not lift the viewfinder. The video light heat may damage the eyecup.

Sugerencias para videofilmar mejor

Coloque la videocámara digital sobre una superficie plana o utilice un trípode

Pruebe a colocar la videocámara digital sobre una mesa u otra superficie plana de altura adecuada. Si posee un trípode para cámara fotográfica, podrá utilizarlo también con esta videocámara digital.
Cuando utilice un trípode que no sea Sony, cerciórese de que la longitud del tornillo del mismo sea inferior a 6,5 mm. De lo contrario, el tornillo podría dañar las partes internas de la videocámara digital.

Precaución para el transporte

No sujete la videocámara digital por ninguna parte que no sea la empuñadura o el asa **[g]**.

Precaución sobre el visor

No coloque la videocámara digital de forma que quede apuntando hacia el sol. El interior del visor podría dañarse.
Tenga cuidado cuando coloque la videocámara digital bajo el sol o cerca de una ventana **[h]**.

Nota sobre el visor

Cuando haya instalado una lámpara para vídeo (no suministrada) en la zapata para accesorios, no levante el visor.
El calor de la lámpara para vídeo podría dañar el ocular del visor.

Checking the recorded picture

Using EDITSEARCH, you can review the last recorded scene or check the recorded picture in the viewfinder.

(1) Set the POWER switch to ON and then set CAMERA/PLAYER to CAMERA.
(2) Turn STANDBY up to STANDBY.
(3) Press the – (⊖) side of EDITSEARCH momentarily; the last few seconds of the recorded portion play back **(Rec Review)**. Hold down the – side of EDITSEARCH until the digital camcorder goes back to the scene you want. The last recorded portion is played back. To go forward, hold down the + side **(Edit Search)**.

Comprobación de las imágenes grabadas

Utilizando EDITSEARCH, podrá revisar la última escena videofilmada o comprobar las imágenes grabadas en el visor.

(1) Ponga el interruptor POWER en ON y después CAMERA/PLAYER en CAMERA.
(2) Gire STANDBY hacia arriba hasta STANDBY.
(3) Presione momentáneamente el lado – (⊖) de EDITSEARCH, y se reproducirán los últimos segundos de la parte grabada **(revisión de la grabación)**.
Mantenga presionado el lado – de EDITSEARCH hasta que la videocámara digital vuelva a la escena deseada. La última parte grabada se reproducirá. Para avanzar, mantenga presionado el lado + **(búsqueda para edición)**.

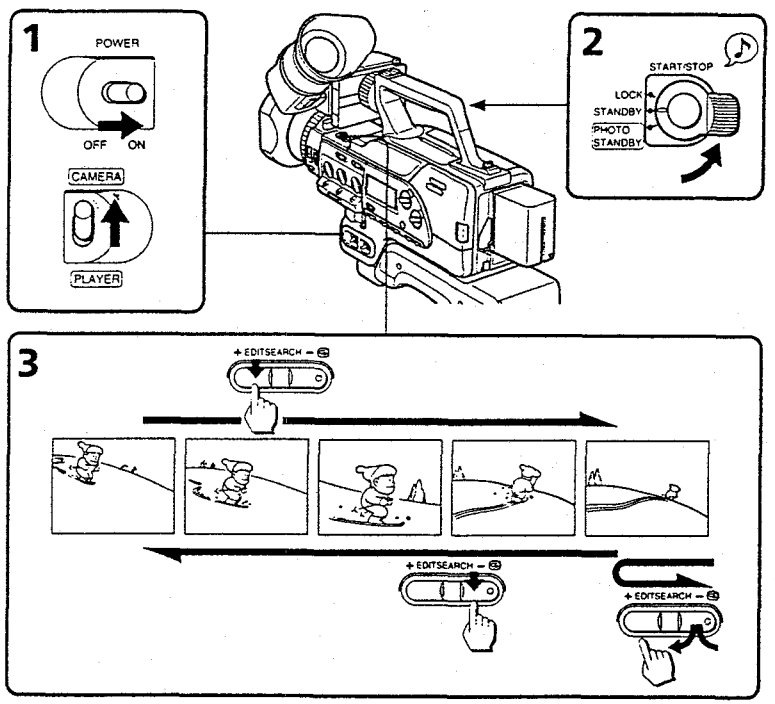

• The upper side **[a]** of the power zoom indicator shows the digital zooming zone, and the lowerside **[b]** shows the optical zooming zone. If you set the D ZOOM function to OFF, the **[a]** zone disappears.

• La parte superior **[a]** del indicador del zoom motorizado mostrará la zona digital del zoom, y la inferior **[b]** la zona óptica del mismo. Si ajusta la función D ZOOM a OFF, la zona **[a]** desaparecerá.

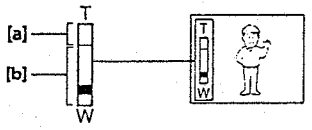

Hints for better shooting Sugerencias para videofilmar mejor

When shooting with the digital camcorder on your shoulder, you'll get better results by holding the digital camcorder according to the following suggestions:

- Place the digital camcorder on your shoulder and secure it with the grip strap so that you can easily manipulate the controls with your thumb.
- To adjust the grip, loosen the grip screw with a coin, rotate the grip, and then tighten the screw. The grip can be rotated 5° up or down.

Cuando videofilme con la videocámara digital al hombro, obtendrá mejores resultados si la sujeta de acuerdo con las sugerencias siguientes.

- Coloque la videocámara digital sobre su hombro y asegúrela con la correa de la empuñadura de forma que pueda accionar fácilmente los controles con su pulgar.
- Para ajustar la empuñadura, afloje el tornillo de la misma con una moneda, y después apriételo. La empuñadura podrá girarse 5° hacia arriba o hacia abajo.

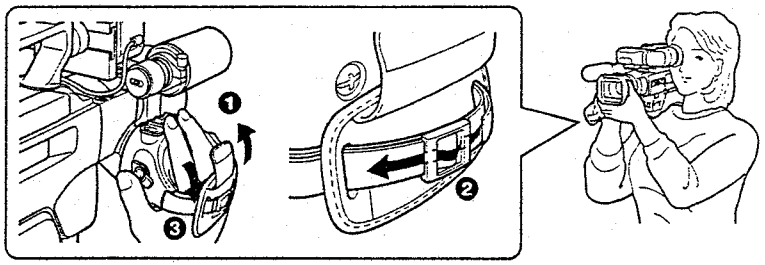

- Place your right elbow against your side.
- Place your left hand under the digital camcorder to support it. Be sure to not touch the built-in microphone.
- Place your eye firmly against the viewfinder eyecup.
- Use the viewfinder frame as a guide to determine the horizontal plane.

- Apoye el codo derecho contra su costado.
- Coloque la mano izquierda debajo de la videocámara digital para sostenerla. Tenga cuidado de no tocar el micrófono incorporado.
- Coloque el ojo firmemente contra el ocular del visor.
- Utilice el cuadro del visor como guía para determinar el plano horizontal.

- You can also record in a low position to get an interesting angle. Lift the viewfinder up for recording from a low position **[a]**.
- While recording in a low position, you can use the front START/STOP button **[b]**.
- You can rotate the viewfinder 120° up and 90° down. This is useful when recording in a high or low position **[c]**.

- Usted también podrá videofilmar en posición baja para obtener un ángulo interesante. Para videofilmar en posición baja, levante el visor **[a]**.
- Cuando videofilme en posición baja, podrá utilizar la tecla START/STOP frontal **[b]**.
- Usted podrá girar el visor 120° hacia arriba y 90° hacia abajo. Esto será muy útil para videofilmar en posición alta o baja **[c]**.

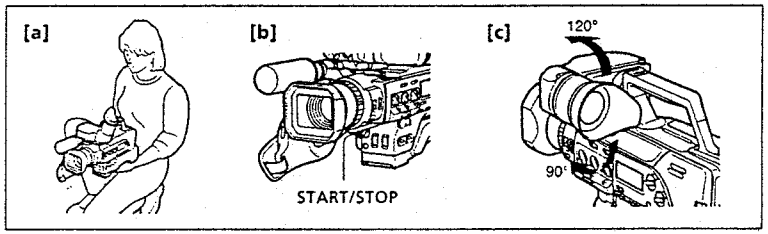

- You can move the viewfinder up to about 30 mm (1 3/16 inches) laterally. Turn the lock ring to release the viewfinder, and then move it. Turn back the lock ring to fix the viewfinder in place **[d]**.
- You can move the viewfinder up to about 30 mm (1 3/16 inches) lengthwise. Turn the lock lever under the viewfinder to release it, and then move the viewfinder. Turn back the lock lever to fix the viewfinder in place **[e]**.
- To change the position of the shoulder pad, loosen the two screws under the shoulder pad and move the shoulder pad **[f]**. Then tighten the screws well.

- Usted podrá mover lateralmente el visor hasta 30 mm. Gire el anillo de bloqueo para liberar el visor, y después muévalo. Para fijar el visor en su lugar, gire el anillo de bloqueo en sentido contrario **[d]**.
- Usted podrá mover longitudinalmente el visor unos 30 mm. Gire la palanca de bloqueo situada debajo del visor para liberar éste, y después muévalo. Para fijar el visor, gire la palanca en sentido contrario **[e]**.
- Para cambiar la posición de la almohadilla para el hombro, afloje los dos tornillos situados debajo de la misma y muévala **[f]**. Después apriete bien los tornillos.

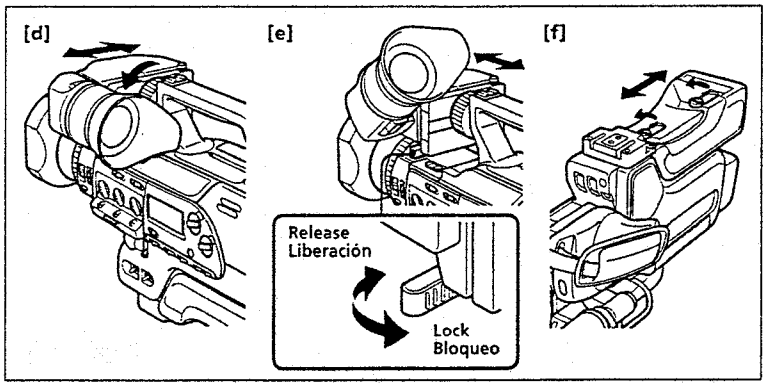

Hints for better shooting

Sugerencias para videofilmar mejor

Place the digital camcorder on a flat surface or use a tripod
Try placing the digital camcorder on a table top or any other flat surface of suitable height. If you have a tripod for a still camera, you can also use it with the digital camcorder.
When attaching a non-Sony tripod, make sure that the length of the tripod screw is less than 6.5 mm (9/32 inch). Otherwise, the screw may damage the inner parts of the digital camcorder.

Caution on carrying
Do not pick up the digital camcorder by anything other than the grip or handle [g].

Caution on the viewfinder
Do not place the digital camcorder so as to point the viewfinder toward the sun. The inside of the viewfinder may be damaged.
Be careful when placing the digital camcorder under sunlight or by a window [h].

Coloque la videocámara digital sobre una superficie plana o utilice un trípode
Pruebe a colocar la videocámara digital sobre una mesa u otra superficie plana de altura adecuada. Si posee un trípode para cámara fotográfica, podrá utilizarlo también con esta videocámara digital.
Cuando utilice un trípode que no sea Sony, cerciórese de que la longitud del tornillo del mismo sea inferior a 6,5 mm. De lo contrario, el tornillo podría dañar las partes internas de la videocámara digital.

Precaución para el transporte
No sujete la videocámara digital por ninguna parte que no sea la empuñadura o el asa [g].

Precaución sobre el visor
No coloque la videocámara digital de forma que quede apuntando hacia el sol. El interior del visor podría dañarse.
Tenga cuidado cuando coloque la videocámara digital bajo el sol o cerca de una ventana [h].

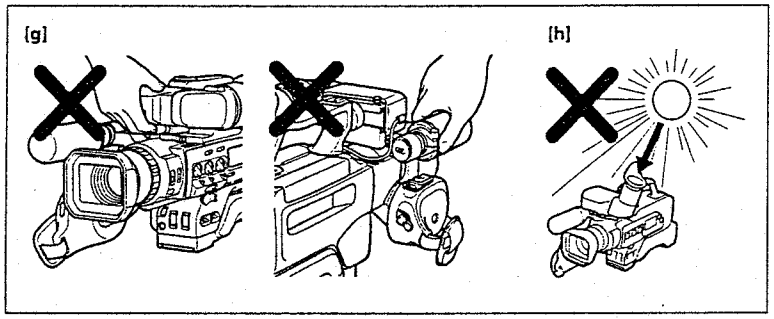

Note on the viewfinder
When attaching the video light (not supplied) to the accessory shoe, do not lift the viewfinder. The video light heat may damage the eyecup.

Nota sobre el visor
Cuando haya instalado una lámpara para vídeo (no suministrada) en la zapata para accesorios, no levante el visor.
El calor de la lámpara para vídeo podría dañar el ocular del visor.

Checking the recorded picture

Comprobación de las imágenes grabadas

Using EDITSEARCH, you can review the last recorded scene or check the recorded picture in the viewfinder.
(1) Set the POWER switch to ON and then set CAMERA/PLAYER to CAMERA.
(2) Turn STANDBY up to STANDBY.
(3) Press the – (⊖) side of EDITSEARCH momentarily; the last few seconds of the recorded portion play back **(Rec Review)**. Hold down the – side of EDITSEARCH until the digital camcorder goes back to the scene you want. The last recorded portion is played back. To go forward, hold down the + side **(Edit Search)**.

Utilizando EDITSEARCH, podrá revisar la última escena videofilmada o comprobar las imágenes grabadas en el visor.
(1) Ponga el interruptor POWER en ON y después CAMERA/PLAYER en CAMERA.
(2) Gire STANDBY hacia arriba hasta STANDBY.
(3) Presione momentáneamente el lado – (⊖) de EDITSEARCH, y se reproducirán los últimos segundos de la parte grabada **(revisión de la grabación)**.
Mantenga presionado el lado – de EDITSEARCH hasta que la videocámara digital vuelva a la escena deseada. La última parte grabada se reproducirá. Para avanzar, mantenga presionado el lado + **(búsqueda para edición)**.

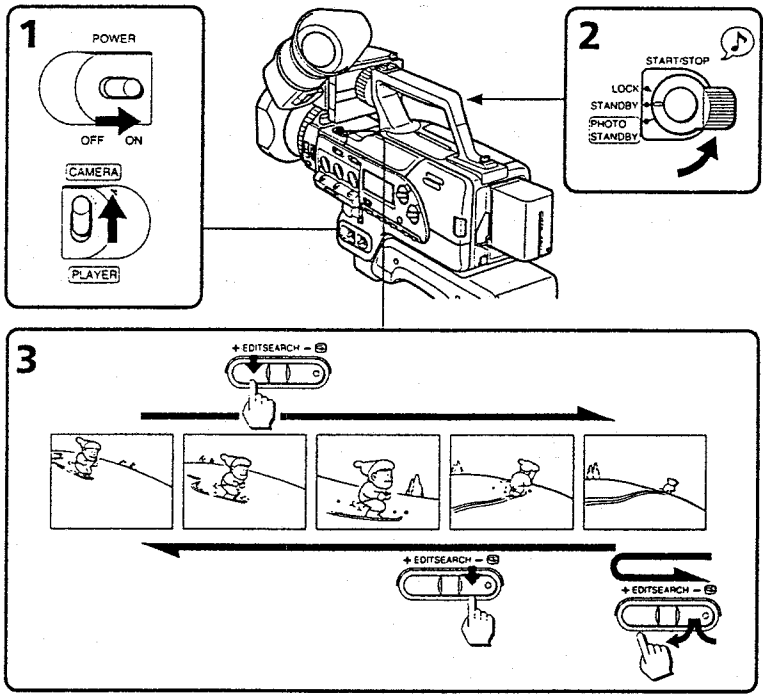

To mark the portion you want to monitor again
Press ZERO SET MEMORY while playing back. After you finish playing back, press ◄◄. The tape rewinds to the position you want (0:00:00) and stops.

To monitor the sound while viewing the playback picture in the viewfinder
Connect headphones (not supplied) to the ∩ jack or turn on the built-in speaker by setting SPEAKER to ON.

Using the Remote Commander
You can control playback using the supplied Remote Commander. Before using the Remote Commander, insert the R6 (size AA) batteries.

Note on the DISPLAY button on the remote commander
Press DISPLAY to display the screen indicators. To erase the indicators, press DISPLAY again.

Various playback modes

To view a still picture (playback pause)
Press II during playback. To resume playback, press II or ▷.

To locate a scene (picture search)
Keep pressing ◄◄ or ►► during playback. To resume normal playback, release the button.

To monitor the high-speed picture while advancing the tape or rewinding (skip scan)
Keep pressing ◄◄ while rewinding or ►► while advancing the tape. To resume normal playback, press ▷.

Para marcar una parte a la que desee volver
Presione ZERO SET MEMORY durante la reproducción. Cuando finalice la reproducción, presione ◄◄. La cinta se rebobinará hasta la posición deseada (0:00:00) y se parará.

Para escuchar el sonido durante la contemplación de las imágenes de reproducción en el visor
Conecte unos auriculares (no suministrados) en la toma ∩ o active el altavoz incorporado ajustando SPEAKER a ON.

Utilización del telemando
Usted podrá controlar la reproducción utilizando el telemando suministrado. Antes de utilizar el telemando, insértele las pilas R6 (tamaño AA) suministradas.

Nota sobre la tecla DISPLAY del telemando
Presione DISPLAY para hacer que se visualicen los indicadores en la pantalla. Para borrarlos, vuelva a presionar DISPLAY.

Diversos modos de reproducción

Para contemplar una imagen fija (reproducción en pausa)
Presione II durante la reproducción. Para reanudar la reproducción, presione II o ▷.

Para localizar la escena deseada (búsqueda de imágenes)
Mantenga presionada ◄◄ o ►► durante la reproducción. Para reanudar la reproducción normal, suelte la tecla.

Para contemplar las imágenes a gran velocidad durante el avance rápido o el rebobinado de la cinta (exploración con salto)
Mantenga presionada ◄◄ durante el rebobinado o ►► durante el avance rápido de la cinta. Para reanudar la reproducción normal, presione ▷.

To view the picture at 1/5 speed (slow playback)
Press I► during playback. To resume normal playback, press ▷. If slow playback lasts for about 1 minute, it shifts to normal speed automatically.

To view the picture at double speed
For double speed playback in the reverse direction, press ◄II/<, then press x2 on the Remote Commander during playback. For double speed playback in the forward direction, press >/II►, then press x2 during playback. To resume normal playback, press ▷.

To view the picture frame-by-frame
Press ◄II/< or >/II► in playback pause mode. If you keep pressing the button, you can view the picture at 1/25 speed. To resume normal playback, press ▷.

To change the playback direction
Press ◄II/< for reverse direction or >/II► for forward direction during playback. To resume normal playback, press ▷.

Notes on playback
- Streaks appear and the sound is muted in the various playback modes.
- When playback pause mode is left on for 5 minutes, the digital camcorder automatically enters stop mode.
- When using playback slow or still picture modes, images from the previous frames might to seen mixed in with the main picture.

Para contemplar imágenes a 1/5 de la velocidad normal (reproducción a cámara lenta)
Presione I► durante la reproducción. Para reanudar la reproducción normal, presione ▷. Si la reproducción a cámara lenta dura aproximadamente 1 minuto, cambiará automáticamente a la velocidad normal.

Para contemplar imágenes reproducidas a velocidad doble
Para reproducir a velocidad doble en sentido regresivo, presione ◄II/<, y después presione x2 del telemando durante la reproducción. Para reproducir a velocidad doble en sentido progresivo, presione >/II►, y después presione x2 del telemando durante la reproducción. Para reanudar la reproducción normal, presione ▷.

Para contemplar las imágenes reproducidas fotograma tras fotograma
Presione ◄II/< o >/II► en el modo de reproducción en pausa. Si mantiene presionada la tecla, podrá ver las imágenes a 1/25 de la velocidad normal. Para reanudar la reproducción normal, presione ▷.

Para cambiar el sentido de reproducción
Presione ◄II/< para retroceder o >/II► para avanzar durante la reproducción. Para reanudar la reproducción normal, presione ▷.

Notas sobre la reproducción
- En los modos de reproducción a diversas velocidades aparecerán rayas.
- Si deja el modo de reproducción en pausa durante 5 minutos, la videocámara digital entrará automáticamente en el modo de parada.
- Cuando utilice los modos de reproducción a cámara lenta o de imagen fija es posible que los fotogramas anteriores se vean mezclados con la imagen principal.

Using alternative power sources

Utilización de fuentes de alimentación alternativas

You can choose any of the following power sources for your digital camcorder: battery pack and the mains. Choose the appropriate power source depending on where you want to use your digital camcorder.

Place	Power source	Accessory to be used
Indoors	Mains	Supplied AC power adaptor
Outdoors	Battery pack	Battery pack NP-F930 (supplied), NP-F730, NP-720

Note on AC power adaptor
Do not connect anything other than AC-V615 AC power adaptor to this digital camcorder.

Note on power sources
Disconnecting the power source or removing the battery pack during recording or playback may damage the inserted tape. If this happens, restore the power supply again immediately.

Using the mains

(1) Connect the mains lead to the AC power adaptor.
(2) Connect the mains lead to the mains, then connect the connecting cord to the DC OUT jack on the AC power adaptor.
(3) Connect the connecting cord to the DC IN jack on the digital camcorder.

Usted podrá elegir cualquiera de las fuentes de alimentación siguientes para su videocámara digital: batería o corriente de la red. Elija la fuente de alimentación apropiada dependiendo del lugar en le que vaya a utilizar su videocámara digital.

Lugar	Fuente de alimentación	Accesorio utilizado
Interiores	Corriente de la red	Adaptador de alimentación de CA suministrado
Exteriores	Batería	Batería NP-F930 (suministrada), NP-F730, NP-720

Nota sobre el adaptor de alimentación de CA
No conecte a esta videocámera digital ningún adaptor de alimaentación de CA excepto el AC-V615.

Nota sobre las fuentes de alimentación
La desconexión de la fuente de alimentación o la extracción de la batería durante la grabación o la reproducción podría dañar la cinta del videocassette insertado. Cuando suceda esto, vuelva a conectar inmediatamente la fuente de alimentación.

Utilización de la corriente de la red

(1) Conecte el cable de alimentación al adaptador de alimentación de CA.
(2) Conecte el cable de alimentación a un tomacorriente, y después conecte el cable conector a la toma DC OUT del adaptador de alimentación de CA.
(3) Conecte el cable conector a la toma DC IN de la videocámara digital.

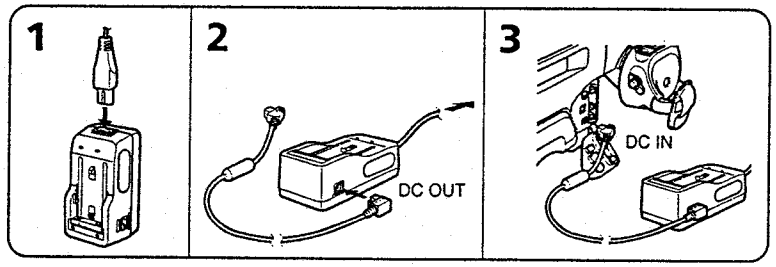

Charging the attached battery pack
After connecting the mains lead to the mains and setting the POWER switch on the digital camcorder to OFF, you can charge the battery pack in either of the following two ways:
- Charging the battery attached to the digital camcorder
  Leave the battery attached to the digital camcorder. (The NP-F930 battery requires about 410 minutes for a full charge and about 350 minutes for a normal charge.)
  While charging, the battery indicator appears repeatedly in the display window:

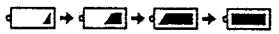

- Charging two batteries at the same time
  Attach one battery to the AC power adaptor and the other to the digital camcorder. Both are charged simultaneously. When charged, CHARGE lamp and the indicator goes out (normal charge). If either lamp is still lit, both batteries are not charged (the NP-F930 batteries require about 440 minutes for a full charge and about 380 minutes for a normal charge).

To remove the adaptor
Pull out by the plug. Never pull on the connecting cord itself.

WARNING
The mains lead must only be changed at a qualified service shop.

PRECAUTION
The set is not disconnected from the AC power source (mains) as long as it is connected to the mains, even if the set itself has been turned off.

Notes on the VTR/CAMERA lamp
- The VTR/CAMERA lamp will remain lit for a while even if the unit is unplugged after use. This is normal.
- If the VTR/CAMERA lamp does not light, disconnect the mains lead. After about one minute, reconnect the mains lead.

Carga de la batería instalada
Después de haber conectado el cable de alimentación y de haber puesto el interruptor POWER de la videocámara digital en OFF, podrá cargar la batería de cualquiera de las dos formas siguientes:
- Carga de la batería instalada en la videocámara digital
  Deje la batería instalada en la videocámara digital. (La batería NP-F930 requerirá unos 410 minutos para cargarse completamente y aproximadamente 350 minutos para la carga normal.)
  Durante la carga, el indicador de la batería aparecerá repetidamente en el visualizador:

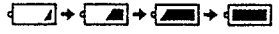

- Carga de dos baterías al mismo tiempo
  Instale una batería en el adaptador de alimentación de CA y otra en la videocámara digital. Ambas se cargarán simultáneamente. Cuando se hayan cargado, la lámpara CHARGE se apagará y el indicador desaparecerá (carga normal). Si la lámpara permanece encendida, no estará cargada ninguna batería (las baterías NP-F930 requieren unos 440 minutos para la carga completa y aproximadamente 380 minutos para la carga normal).

Para extraer el adaptador
Desconecte la clavija tirando de ella. No tire nunca del propio cable conector.

ADVERTENCIA
El cable de alimentación solamente deberá ser cambiado en un centro de reparaciones cualificado.

PRECAUCIÓN
La unidad no se desconectará de la fuente de alimentación de CA (red) mientras permanezca enchufado en una toma de la red, incluso aunque haya desconectado su alimentación.

Notas sobre la lámpara VTR/CAMERA
- La lámpara VTR/CAMERA permanecerá encendida durante cierto tiempo aunque haya desenchufado la unidad después de haberla utilizado. Esto es normal.
- Si la lámpara VTR/CAMERA no se enciende, desconecte el cable de alimentación. Después de aproximadamente un minuto, vuelva a conectarlo.

Changing the mode settings

You can change the mode settings in the menu system to further enjoy the features and functions of the digital camcorder.

(1) Open the cover, then press MENU to display the menu.
(2) Press ∨ or ∧ to select the desired item, then press EXECUTE.
(3) Press ∨ or ∧ to select the desired setting, then press EXECUTE.
For some items, you may need to repeat steps 2 and 3.
(4) Press MENU to erase the menu display.

Cambio de los ajustes de modo

Usted podrá cambiar los ajustes de modo en el sistema de menús para disfrutar más de las características y funciones de la videocámara digital.

(1) Abra la cubierta, y después presione MENU para hacer que se visualice el menú.
(2) Presione ∨ o ∧ para seleccionar el ítem deseado, y después presione EXECUTE.
(3) Presione ∨ o ∧ para seleccionar el ajuste deseado, y después presione EXECUTE.
Para algunos ítemes, tendrá que repetir los pasos 2 y 3.
(4) Para borrar la visualización del menú, presione MENU.

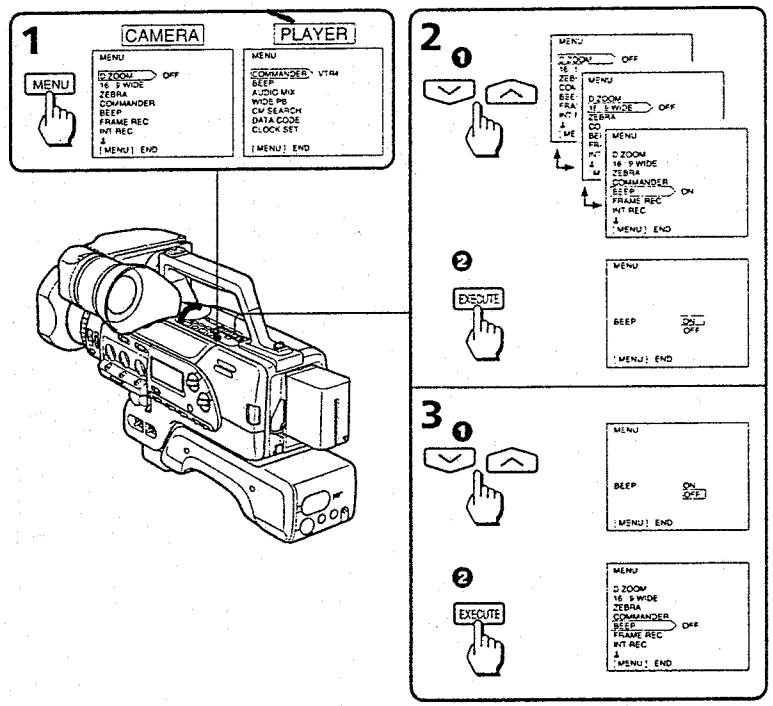

Selecting the mode setting of each item

Items for both CAMERA and PLAYER modes

COMMANDER* <VTR4/OFF/ID/ID SET>
- Normally select VTR4.
- Select OFF when not using the Remote Commander.
- Select ID to register the ID number of the Remote Commander.
- Select ID SET to change the ID number to match the ID of the Remote Commander.

BEEP* <ON/OFF>
- Select ON so that beeps sound when you start/stop recording, etc.
- Select OFF when you do not want to hear the beep sound.

CLOCK SET*
Reset the date and time.

Items for CAMERA mode only

D ZOOM* <OFF/ON>
Before turning on D ZOOM, set DIGITAL MODE to ZOOM/16:9 WIDE.
- Select OFF to not use the digital zoom. The digital camcorder goes back to 10x zoom.
- Select ON to activate digital zooming.

16:9 WIDE* <OFF/ON>
Before turning on 16:9 WIDE, set DIGITAL MODE to ZOOM/16:9 WIDE.
- Normally select OFF.
- Select ON to record a 16:9 wide picture to watch on a wide-screen TV.

ZEBRA* <OFF/ON>
- Normally select OFF.
- Select ON to shoot with the zebra pattern displayed in the viewfinder.

FRAME REC <OFF/ON>
- Normally select OFF.
- Select ON for cut recording.

Selección de los ajustes de modo de cada ítem

Ítemes para los modos CAMERA y PLAYER

COMMANDER* <VTR4/OFF/ID/ID SET>
- Normalmente seleccione VTR4.
- Seleccione OFF cuando no vaya a utilizar el telemando.
- Seleccione ID para registrar el número de identificación del telemando.
- Seleccione ID SET para cambiar el número de identificación para que coincida con el del telemando.

BEEP* <ON/OFF>
- Seleccione ON para oír un pitido al iniciar/parar la videofilmación, etc.
- Seleccione OFF cuando no desee oír el pitido.

CLOCK SET*
Reajuste la fecha y la hora.

Ítemes para el modo CAMERA solamente

D ZOOM* <OFF/ON>
Antes de activar D ZOOM, ajuste DIGITAL MODE a ZOOM/16:9 WIDE.
- Seleccione OFF cuando no vaya a utilizar el zoom digital. La videocámara digital pasará al zoom de 10 aumentos.
- Seleccione ON para activar el zoom digital.

16:9 WIDE* <OFF/ON>
Antes de activar 16:9 WIDE, ajuste DIGITAL MODE a ZOOM/16:9 WIDE.
- Normalmente seleccione OFF.
- Seleccione ON para videofilmar imágenes de 16:9 para contemplarlas en un televisor de pantalla amplia.

ZEBRA* <OFF/ON>
- Normalmente seleccione OFF.
- Seleccione ON para videofilmar con un patrón cebra indicado en el visor.

FRAME REC <OFF/ON>
- Normalmente seleccione OFF.
- Seleccione ON para grabar cortes.

Changing the mode settings

INT REC <RETURN> <SET> <INTERVAL*/REC TIME*>
- Select RETURN to return to the menu to change other menu items.
- Select SET to set interval recording ON or OFF.
- Select INTERVAL to set or change the interval time for interval recording.
- Select REC TIME to set or change the recording time for interval recording.

SLOW SHTR* <3/6/12/25>
Before setting, turn SHUTTER SPEED to SLOW.
Select a slow shutter speed.

S PRESET* <50/100/215/425/1000/1750/3500/10000>
Before setting, turn SHUTTER SPEED to PRESET.
Select a shutter speed.

G PRESET* <-3dB/0dB/3dB/6dB/9dB/12dB/15dB/18dB>
Before setting, turn GAIN to PRESET.
Select a gain level.

CUSTOM* <RETURN> <SET> <COLOUR LV/SHARPNESS/WB SHIFT/AE SHIFT> <RESET>
- Select RETURN to return to the menu to change other menu items.
- Select SET to set custom preset ON or OFF.
- Select COLOUR LV/SHARPNESS/WB SHIFT/AE SHIFT to preset the colour intensity (COLOUR LV), sharpness (SHARPNESS), white balance (WB SHIFT), and brightness (AE SHIFT) of the picture.
- Select RESET to restore the default settings.

Items for PLAYER mode only

AUDIO MIX*
When playing back a tape recorded with audio dubbing, select this item to adjust the volume balance between audio mode ST1 and ST2.

WIDE PB* <OFF/ON>
- Normally select OFF.
- Select ON to playback a picture recorded in the 16:9 wide mode to watch on a normal (4:3) TV.

Cambio de los ajustes de modo

INT REC <RETURN> <SET> <INTERVAL*/REC TIME*>
- Seleccione RETURN para volver al menú a fin de cambiar otros ítemes del menú.
- Seleccione SET para activar (ON) o desactivar (OFF) la grabación a intervalos.
- Seleccione INTERVAL para ajustar o cambiar la duración del intervalo de la grabación a intervalos.
- Seleccione REC TIME para ajustar o cambiar la duración de grabación para la grabación a intervalos.

SLOW SHTR* <3/6/12/25>
Antes del ajuste, ponga SHUTTER SPEED en SLOW.
Seleccione una velocidad de obturación lenta.

S PRESET* <50/100/215/425/1000/1750/3500/10000>
Antes del ajuste, ponga SHUTTER SPEED en PRESET.
Seleccione una veloidad de obturación.

G PRESET* <-3dB/0dB/3dB/6dB/9dB/12dB/15dB/18dB>
Antes del ajuste, ponga GAIN en PRESET.
Seleccione un nivel de ganancia.

CUSTOM* <RETURN> <SET> <COLOUR LV/SHARPNESS/WB SHIFT/AE SHIFT> <RESET>
- Seleccione RETURN para volver al menú a fin de cambiar otros ítemes del menú.
- Seleccione SET para activar (ON) o desactivar (OFF) el preajuste de usuario.
- Seleccione COLOUR LV/SHARPNESS/WB SHIFT/AE SHIFT para ajustar la intensidad del color (COLOUR LV), la nitidez (SHARPNESS), el equilibrio del blanco (WB SHIFT), y el brillo (AE SHIFT) de las imágenes.
- Seleccione RESET para restablecer los ajustes de fábrica.

Ítemes para el modo PLAYER solamente

AUDIO MIX*
Seleccione este ítem para ajustar el equilibrio del volumen entre los modos de audio ST1 y ST2.

WIDE PB* <OFF/ON>
- Normalmente seleccione OFF.
- Seleccione ON para reproducir imágenes grabadas modo de pantalla amplia 16:9 en un televisor normal (4:3).

CM SEARCH* <ON/OFF>
- Normally select ON to turn on the cassette memory search function.
- Select OFF to search without using the cassette memory function.

DATA CODE* <DATE/CAM/DATE>
- Select DATE/CAM to display date and time, as well as various settings data, of your recordings.
- Select DATE to display date and time, of your recordings.

When DIGITAL MODE is set to OVERLAP
You cannot set 16:9 WIDE and D ZOOM to ON. When you set DIGITAL MODE to OVERLAP, 16:9 WIDE and D ZOOM settings are changed to OFF automatically.

About FRAME REC and INT REC setting
Both settings are automatically set to off when:
- The POWER switch is set to OFF.
- CAMERA/PLAYER is set to PLAYER.
- Turn STANDBY up to PHOTO STANDBY.

* These settings are retained even when the battery is removed, as long as the lithium battery is in place.

CM SEARCH* <ON/OFF>
- Normalmente seleccione ON para activar la función de búsqueda memorizada de videocassette.
- Seleccione OFF buscar sin utilizar la función de memoria del videocassette.

DATA CODE* <DATE/CAM/DATE>
- Seleccione DATE/CAM para hacer que se visualice la fecha y la hora, así como diversos datos de ajustes, de sus videofilmaciones.
- Seleccione DATE para hacer que se visualice la fecha y la hora de sus videofilmaciones.

Cuando DIGITAL MODE esté ajustado a OVERLAP
Usted no podrá ajustar 16:9 WIDE ni D ZOOM a ON. Cuando ajuste DIGITAL MODE a OVERLAP, los ajustes de 16:9 WIDE y D ZOOM cambiarán automáticamente a OFF.

Nota sobre el ajuste de FRAME REC e INT REC
Ambos ajustes se anularán cuando:
- Ponga el interruptor POWER en OFF.
- CAMERA/PLAYER se ajustará a PLAYER.
- Gire STANDBY hacia arriba hasta PHOTO STANDBY.

* Estos ajustes se conservará aunque quite la batería, mientras la pila de litio esté instalada.

Fade-in and fade-out

Aumento gradual y desvanecimiento

You can fade in or out to give your recording a professional appearance.
When fading in, the picture gradually fades in from black while the sound increases. When fading out, the picture gradually fades to black while the sound decreases.
To use fade-in and fade-out, press FADER/OVERLAP to display FADER in the viewfinder.

Usted podrá realizar el aumento gradual o el desvanecimiento para dar a sus grabaciones un aspecto profesional.
Cuando realice el aumento gradual, la imagen aparecerá gradualmente desde un fondo negro mientras aumenta el sonido. Cuando realice el desvanecimiento la imagen desaparecerá gradualmente hacia un fondo negro mientras disminuye el sonido.
Para utilizar el aumento gradual o el desvanecimiento, presione FADER/OVERLAP para hacer que en el visor se visualice FADER.

Fade-in and fade-out / Aumento gradual y desvanecimiento

When fading in [a]

(1) While the digital camcorder is in Standby mode, press FADER/OVERLAP. The fade indicator starts flashing.
(2) Press START/STOP to start recording. The fade indicator stops flashing.

When fading out [b]

(1) During recording, press FADER/OVERLAP. The fade indicator starts flashing.
(2) Press START/STOP to stop recording. The fade indicator stops flashing, and then recording stops.

Aumento gradual [a]

(1) Mientras la videocámara digital esté en el modo de espera, presione FADER/OVERLAP. El indicador de aumento gradual y desvanecimiento empezará a parpadear.
(2) Presione START/STOP para empezar a grabar. El indicador de aumento gradual y desvanecimiento dejará de parpadear.

Desvanecimiento [b]

(1) Durante la grabación, presione FADER/OVERLAP. El indicador de aumento gradual y desvanecimiento empezará a parpadear.
(2) Presione START/STOP para parar la grabación. El indicador de aumento gradual y desvanecimiento dejará de parpadear, y la grabación se parará.

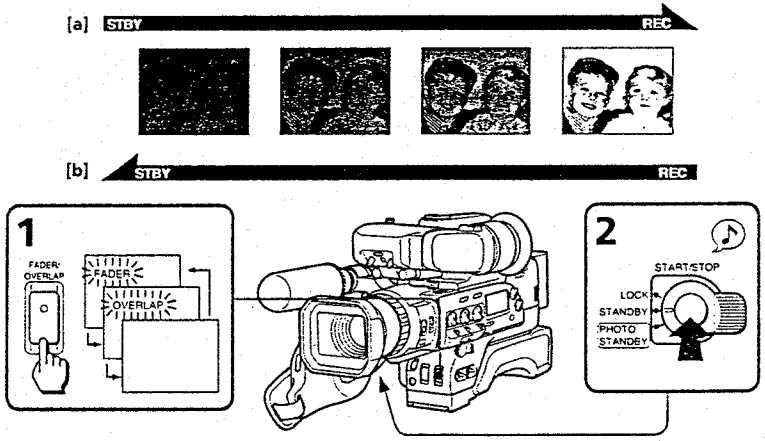

To cancel the fade-in/fade-out function

Before pressing START/STOP, press FADER/OVERLAP until the indicator disappears.

Note on the fade-in/fade-out function

You cannot fade-in or fade-out while recording with interval recording, cut recording, or photo recording.

Para cancelar la función de aumento gradual/desvanecimiento

Antes de presionar START/STOP, presione FADER/OVERLAP hasta que desaparezca el indicador.

Nota sobre la función de aumento gradual/desvanecimiento

Usted no podrá realizar el aumento gradual ni el desvanecimiento cuando esté realizando la grabación a intervalos, la grabación de cortes, ni la grabación de fotografías.

Overlapping two pictures / Superposición de dos imágenes

When using the overlap function, the picture gradually fades in over a still picture of the last scene recorded.
(1) While the digital camcorder is in Standby mode, set DIGITAL MODE to OVERLAP.
(2) Press FADER/OVERLAP repeatedly until "OVERLAP" appears in the viewfinder.
(3) Press START/STOP to start recording. The scene being shot gradually fades in over the still picture of the last recorded scene.

Cuando utilice la función de superposición, la imagen aparecerá gradualmente sobre una imagen fija de la última escena grabada.
(1) Con la videocámara digital en el modo de espera, ajuste DIGITAL MODE a OVERLAP.
(2) Presione repetidamente FADER/OVERLAP hasta que en el visor aparezca "OVERLAP".
(3) Presione START/STOP para iniciar la grabación.
La escena que esté videofilmando aparecerá gradualmente sobre la imagen fija de la última escena grabada.

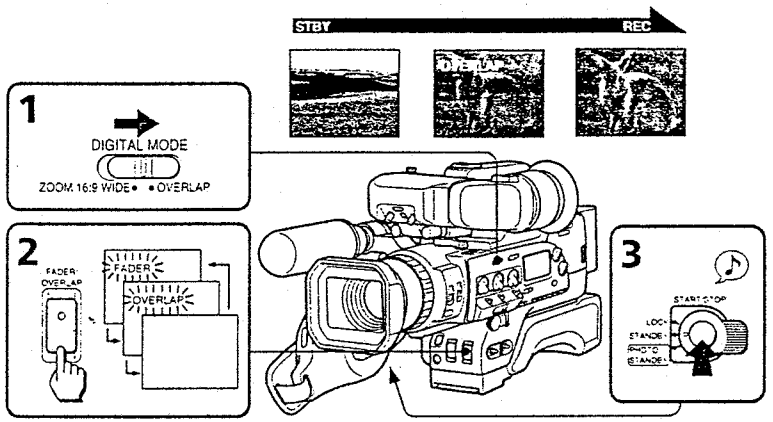

To cancel the overlap function

Before pressing START/STOP, press FADER/OVERLAP until the indicator disappears.

Notes on the overlap function

- You cannot use the overlap function while recording with interval recording, cut recording, or photo recording.
- When in Standby mode select OVERLAP, the digital camcorder automatically goes into picture search, then the last recorded scene is stored for overlap.
- When you set DIGITAL MODE to OVERLAP, 16:9 WIDE and D ZOOM settings are set to OFF automatically.

Para cancelar la función de superposición

Antes de presionar START/STOP, presione FADER/OVERLAP hasta que desaparezca el indicador.

Notas sobre la función de superposición

- Usted no podrá utilizar la función de superposición cuando esté realizando la grabación a intervalos, la grabación de cortes, ni la grabación de fotografías.
- En el modo de espera, seleccione OVERLAP, la videocámara digital entrará automáticamente en el modo de búsqueda de imágenes y la última escena grabada se almacenará para superposición.
- Cuando ajuste DIGITAL MODE a OVERLAP, los ajustes de 16:9 WIDE y D ZOOM cambiarán automáticamente a OFF.

Using the wide mode function

You can record a 16:9 wide picture to watch on a 16:9 wide-screen TV.

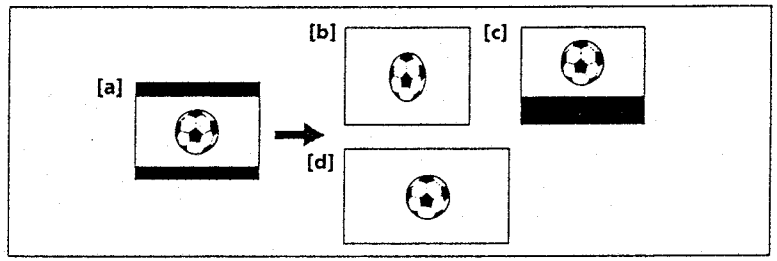

In the viewfinder black bands appear at the top and bottom of the screen **[a]**.
On a normal TV screen, the picture appears horizontally compressed **[b]**.
When setting WIDE PB to ON in the menu system, you get a cinema-like picture with a black band at the bottom of the screen **[c]**.
You can watch the picture of normal images on a wide-screen TV **[d]**.

(1) While the digital camcorder is in Standby mode, set DIGITAL MODE to ZOOM/16:9 WIDE.
(2) Open the cover, then press MENU to display the menu in the viewfinder.
(3) Press ∧ or ∨ to select 16:9 WIDE, then press EXECUTE.
(4) Press ∧ or ∨ to select ON, then press EXECUTE.
(5) Press MENU to erase the menu display.

Utilización de la función de modo de pantalla amplia

Usted podrá videofilmar imágenes de 16:9 para contemplarlas en un televisor de pantalla amplia de 16:9.

En el visor aparecerán bandas negras en la parte superior e inferior de la pantalla **[a]**.
En un televisor de pantalla normal, las imágenes aparecerán horizontalmente comprimidas **[b]**.
Cuando haya ajustado WIDE PB a ON en el sistema de menús, podrá obtener imágenes semejantes a las de un cine con una banda negra en la parte inferior de la pantalla **[c]**.
Usted podrá contemplar las imágenes que aparecen realmente en un televisor de pantalla amplia **[d]**.

(1) Con la videocámara digital en el modo de espera, ajuste DIGITAL MODE a ZOOM/16:9 WIDE.
(2) Abra la cubierta, y después presione MENU para hacer que se visualice el menú en el visor.
(3) Presione ∧ o ∨ para seleccionar 16:9 WIDE, y después presione EXECUTE.
(4) Presione ∧ o ∨ para seleccionar ON, y después presione EXECUTE.
(5) Presione MENU para borrar la visualización del menú.

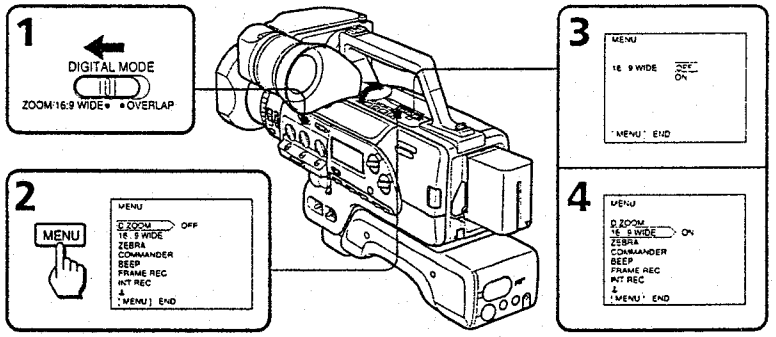

To cancel wide mode

Set 16:9 WIDE to OFF in the menu system.

To watch a tape recorded in 16:9 wide mode on a wide-screen TV

Set the screen mode of the wide-screen TV to full mode. For details, refer to the instruction manual of your TV.

Notes on wide mode

- When you record in 16:9 wide mode, the date and time indicator will be widened on the wide-screen TV.
- If you dub a tape, the tape is copied in the same mode as the original recording.
- When you set DIGITAL MODE to OVERLAP, the 16:9 WIDE setting is changed to OFF automatically.

Para cancelar el modo de pantalla amplia

Ajuste 16:9 WIDE a OFF en el sistema de menús.

Para contemplar las imágenes de una cinta grabada en el modo de pantalla amplia de 16:9 en un televisor de pantalla amplia

Ajuste el modo de pantalla del televisor de pantalla amplia al modo completo. Con respecto a los detalles, consulte el manual de instrucciones de su televisor.

Notas sobre el modo de pantalla amplia

- Cuando grabe en el modo de pantalla amplia de 16:9, el indicador de la fecha y la hora se ampliará en un televisor de pantalla amplia.
- Si duplica una cinta, la copia se realizará en el mismo modo que el de la cinta original.
- Cuando ajuste DIGITAL MODE a OVERLAP, el ajuste de 16:9 WIDE cambiará automáticamente a OFF.

Photo recording

Grabación de fotografías

You can record a still picture like a photograph for about seven seconds. This mode is useful when you want to enjoy a picture such as a photograph or when you print a picture using a video printer (not supplied).

(1) Turn STANDBY up to PHOTO STANDBY. PHOTO appears in the viewfinder.
(2) Keep pressing PHOTO lightly until a still picture appears in the viewfinder. To change the still picture, release PHOTO, select a still picture again, and then press and hold PHOTO lightly. PHOTO CHAPTER appears in the viewfinder.
(3) Press PHOTO deeper.

The still picture in the viewfinder is recorded for about seven seconds. The sound during those seven seconds is also recorded. If you change the POWER switch or STANDBY to other positions while recording, this operation is performed after recording.

Usted podrá grabar una imagen fija igual que una fotografía durante unos siete segundos. Este modo será muy útil cuando desee disfrutar de una imagen como fotografía, o para imprimir una imagen utilizando una videoimpresora (no suministrada).

(1) Gire STANDBY facia arriba hasta PHOTO STANDBY. En el visor aparecerá PHOTO.
(2) Mantenga ligeramente presionada PHOTO hasta que en el visor aparezca una imagen fija. Para cambiar la imagen fija, suelte PHOTO, vuelva a seleccionar una imagen fija, y después mantenga ligeramente presionada PHOTO. En el visor aparecerá PHOTO CHAPTER.
(3) Presione a fondo PHOTO.

La imagen fija del visor se grabará durante unos siete segundos. El sonido durante estos siete segundos también se grabará. Si cambia el interruptor POWER o el selector STANDBY a otras posiciones durante la videofilmación, esta operación se realizará después de la videofilmación.

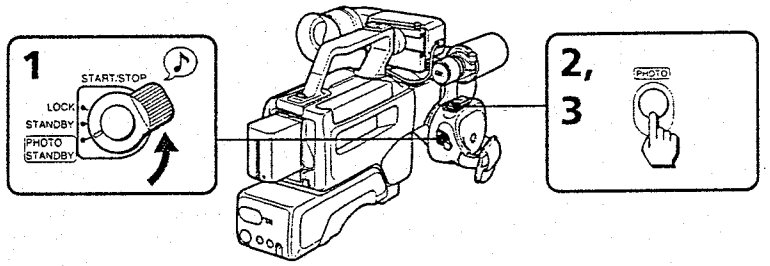

To use the remote commander to take a photo

If you press the PHOTO button on the Remote Commander when a still picture appears in the viewfinder, the digital camcorder will record that still picture. However, you cannot select other still pictures by using this button.

Note on automatic shutter speed adjustment

If AUTO LOCK is ON or AUTO/MANUAL is set to AUTO, the shutter speed is automatically adjusted up to 1/1000 depending on the environment.

Utilización del telemando para tomar fotografías

Si presiona la tecla PHOTO del telemando cuando esté apareciendo una imagen fija en el visor, la videocámara digital grabará tal imagen fija. Sin embargo, usted no podrá seleccionar otras imágenes fijas utilizando esta tecla.

Nota sobre el ajuste automático de la velocidad de obturación

Si pone AUTO LOCK en ON o AUTO/MANUAL en AUTO, la velocidad de obturación se ajustará automáticamente hasta 1/1000 dependiendo de las condiciones ambientales.

To use a flash

Attach the HVL-F7 flash unit (not supplied) to the accessory shoe, and then connect a LANC cable to the LANC jack.

Note on using a flash

When using a flash, the shutter speed is automatically adjusted to 1/50 if using automatic adjustment, and if using manual adjustment, we recommend using a shutter speed of 1/50.

Utilización de un flash

Fije un flash HVL-F7 (no suministrado) a la zapata para accesorios, y después conecte un cable LANC a la toma LANC.

Nota sobre la utilización de un flash

Cuando utilice un flash, la velocidad de obturación se ajustará automáticamente a 1/50 usando el ajuste automático. Si utiliza el ajuste manual, recomendamos usar una velocidad de obturación de 1/50.

Interval recording

Grabación a intervalos

You can make a time-lapse recording by setting the digital camcorder to automatically record and standby sequentially. You can achieve an excellent recording for flowering, emergence, etc., with this function.

Usted podrá realizar una grabación a intervalos ajustando la videocámara digital para que grabe y entre en el modo de espera automáticamente. Con esta función podrá lograr una grabación excelente de floración, emergencias, etc.

Interval recording

(1) While the digital camcorder is in Standby mode, open the cover, then press MENU to display the menu in the viewfinder.
(2) Press ∨ or ∧ to select INT REC, then press EXECUTE.
(3) Press ∨ or ∧ to select SET, then press EXECUTE.
(4) Press ∨ or ∧ to select ON, then press EXECUTE.
(5) Press ∨ or ∧ to select INTERVAL, then press EXECUTE.
(6) Press ∨ or ∧ to select the desired waiting time, then press EXECUTE.
The time: 30SEC ⟷ 1MIN ⟷ 5MIN ⟷ 10MIN.
(7) Press ∨ or ∧ to select REC TIME, then press EXECUTE.
(8) Press ∨ or ∧ to select the desired recording time, then press EXECUTE.
The time: 0.2SEC ⟷ 0.5SEC ⟷ 1SEC ⟷ 2SEC.
(9) Press MENU to erase the menu display.
You can also press ∧ to select RETURN, then press EXECUTE to return to the menu display.
(10) Press START/STOP to start interval recording.

Grabación a intervalos

(1) Con la videocámara digital en el modo de espera, abra la cubierta, y después presione MENU para hacer que se visualice el menú en el visor.
(2) Presione ∨ o ∧ para seleccionar INT REC, y después presione EXECUTE.
(3) Presione ∨ o ∧ para seleccionar SET, y después presione EXECUTE.
(4) Presione ∨ o ∧ para seleccionar ON, y después presione EXECUTE.
(5) Presione ∨ o ∧ para seleccionar INTERVAL, y después presione EXECUTE.
(6) Presione ∨ o ∧ para seleccionar la duración de espera deseada, y después presione EXECUTE.
Duración: 30SEC ⟷ 1MIN ⟷ 5MIN ⟷ 10MIN
(7) Presione ∨ o ∧ para seleccionar REC TIME, y después presione EXECUTE.
(8) Presione ∨ o ∧ para seleccionar la duración de grabación deseada, y después presione EXECUTE.
Duración: 0.2SEC ⟷ 0.5SEC ⟷ 1SEC ⟷ 2SEC
(9) Presione MENU para borrar la visualización del menú.
Usted también podrá presionar ∧ para seleccionar RETURN, y presionar después EXECUTE para volver a la visualización del menú.
(10) Para iniciar la grabación a intervalos, presione START/STOP.

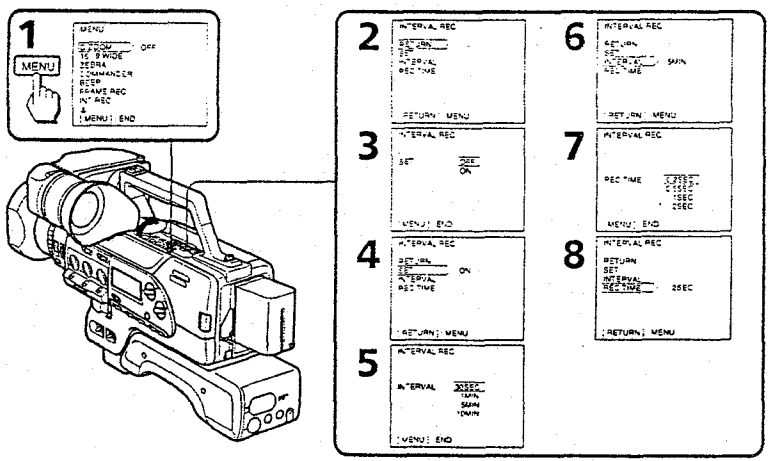

To stop interval recording

Press START/STOP.

To cancel interval recording

Set the INT REC mode to OFF in the menu system.

Notes on interval recording

You cannot do interval recording with photo recording.

If you change the mode as follows, interval recording is cancelled

- Turn STANDBY down to LOCK.
- Set the POWER switch to OFF.
- Set CAMERA/PLAYER to PLAYER.

Para parar la grabación a intervalos

Presione START/STOP.

Para cancelar la grabación a intervalos

Ajuste el modo INT REC a OFF en el sistema de menús.

Nota sobree la grabación a intervalos

Usted no podrá realizar la grabación a intervalos en el modo de grabación de fotografías.

Si cambia el modo de la forma siguiente, la grabación a intervalos se cancelará

- Giro de STANDBY hacia abajo hasta LOCK.
- Puesta del interruptor POWER en OFF.
- Puesta de CAMERA/PLAYER en PLAYER.

Cut recording

You can make a recording with a stop-motion animated effect using cut recording. To create this effect, alternately move the subject a little and make a cut recording. Secure the digital camcorder and use the Remote Commander for effective cut recording.

(1) While the digital camcorder is in Standby mode, open the cover, then press MENU to display the menu in the viewfinder.
(2) Press ∨ or ∧ to select FRAME REC, then press EXECUTE.
(3) Press ∨ or ∧ to select ON, then press EXECUTE.
(4) Press MENU to erase the menu display.
(5) Press START/STOP on the digital camcorder or the Remote Commander to start cut recording.
The digital camcorder records about 5 frames, then enters recording Standby mode.
(6) Move the subject, and repeat step 5.

Grabación de cortes

Usted podrá realizar una grabación con efecto de dibujos animados utilizando la grabación de cortes. Para crear este efecto, mueva alternativamente el motivo un poco y realice una grabación de cortes. Para logar una grabación de cortes efectiva, asegure la videocámara digital y utilice el telemando.

(1) Con la videocámara digital en el modo de espera, abra la cubierta, y después presione MENU para hacer que se visualice el menú en el visor.
(2) Presione ∨ o ∧ para seleccionar FRAME REC, y después presione EXECUTE.
(3) Presione ∨ o ∧ para seleccionar ON, y después presione EXECUTE.
(4) Presione MENU para borrar la visualización del menú.
(5) Para iniciar la grabación de cortes, presione START/STOP de la videocámara digital o del telemando.
La videocámara digital grabará unos 5 fotogramas y después entrará en el modo de grabación en pausa.
(6) Mueva el motivo y repita el paso 5.

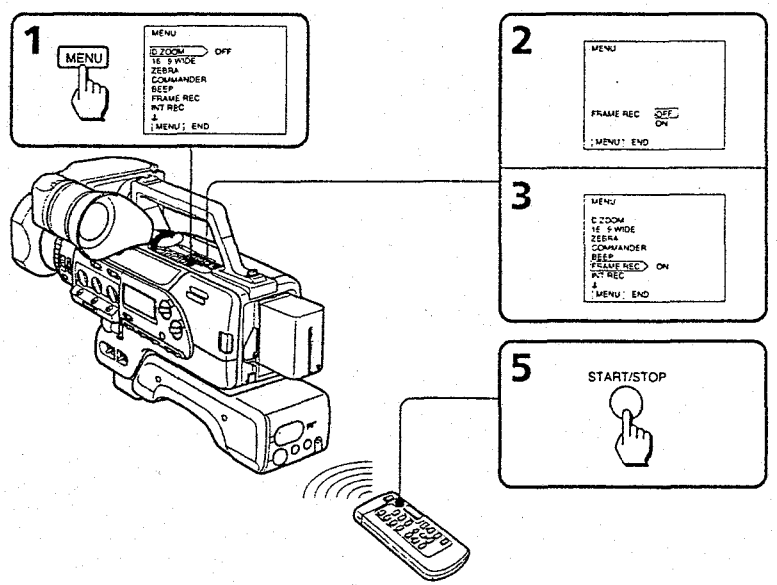

To cancel cut recording

Set the FRAME REC mode to OFF in the menu system.

Notes on cut recording

- The portion immediately after cut recording is completed may be longer than four frames.
- You cannot do cut recording with photo recording.
- The remaining tape indicator may not be accurate if you do cut recording repeatedly.

If you change the mode as follows, cut recording is cancelled

- Turn STANDBY down to LOCK.
- Set the POWER switch to OFF or CAMERA/PLAYER to PLAYER.

Para cancelar la grabación de cortes

Ajuste el modo FRAME REC a OFF en el sistema de menús.

Notas sobre la grabación de cortes

- La parte inmediatamente posterior a la grabación de cortes puede ser más larga de cuatro fotogramas.
- Usted no podrá realizar la grabación de cortes en el modo de grabación de fotografías.
- El indicador de cinta restante puede no ser preciso si realiza repetidamente la grabación de cortes.

Si cambia el modo da la forma siguiente, la grabación de cortes se cancelará

- Giro de STANDBY hacia abajo hasta LOCK.
- Puesta del interruptor POWER en OFF o CAMERA/PLAYER en PLAYER.

Selecting automatic or manual mode

The digital camcorder's automatic functions offer you worry-free operation under most shooting conditions. But in some circumstances, manual adjustment is better for creative recording.
You can adjust focus, aperture, shutter speed, gain, and white balance automatically or manually.
Here's the overview of each manual adjustment. See the following pages for detailed information.

To focus manually

Set FOCUS to MANU. You can adjust the focus regardless of the position of the AUTO LOCK switch. When you want to focus automatically, set FOCUS to AUTO.

To manually adjust aperture, shutter speed, gain, and white balance

Set AUTO LOCK to OFF. By setting AUTO/MANUAL to MANUAL, you can adjust each item independently. When you want to adjust each item automatically, set AUTO/MANUAL to AUTO.

Selección del modo automático o del manual

Las funciones automáticas de la videocámara digital ofrecen una operación sin problemas en la mayoría de las condiciones de videofilmación. Sin embargo, en ciertas circunstancias es mejor utilizar el ajuste manual para lograr grabaciones creativas.
Usted podrá ajustar automática o manualmente el enfoque, la apertura, la velocidad de obturación, la ganancia, y el equilibrio del blanco. A continuación se ofrece un resumen de cada ajuste manual. Para información más detallada, consulte las páginas siguientes.

Para enfocar manualmente

Ponga FOCUS en MANU. Usted podrá ajustar el enfoque independientemente de la posición del selector AUTO LOCK. Cuando desee enfocar automáticamente, ponga FOCUS en AUTO.

Para ajustar manualmente la apertura, la velocidad de obturación, la ganancia, y el equilibrio del blanco

Ponga AUTO LOCK en OFF. Si pone AUTO/MANUAL en MANUAL, podrá ajustar independientemente cada ítem. Cuando desee ajustar automáticamente cada ítem, ponga AUTO/MANUAL en AUTO.

When to adjust aperture, shutter speed, and gain manually

When selecting one of aperture, shutter speed, or gain to be adjusted manually and leaving the remaining two in automatic adjustment, the remaining two automatic settings adjust their values based on the value of that one manual setting.
In the following cases, you should obtain better results by adjusting setting manually.

[a] Shooting portraits – adjust aperture manually.
To alter the depth of focus field, softening the background and making the subject stand out, portrait style.

[b] Shooting sporting events – adjust shutter speed manually.
- To record fast moving objects and protect against blurring of subject.
- To brighten subject in dark situations.
- To prevent the aperture from closing down in unusually bright situations.

[c] Shooting dark environments – adjust gain manually.
- To suppress colour distortion when shooting bright objects in dark places.
- To protect against picture distortion when shooting bright objects.

Cuándo ajustar manualmente la apertura, la velocidad de obturación, y la ganancia

Cuando seleccione manualmente uno de los ajustes siguientes, apertura, velocidad de obturación, o ganancia, y deja los restantes en el modo de ajuste automático, los dos ajustes automáticos restantes adquirirán los valores basados en el valor del ajuste manual.
En los casos siguientes, obtendrá mejores resultados ajustando manualmente.

[a] Videofilmación de retratos – ajuste la apertura a manual.
Para alterar la profundidad de campo, suavizar el fondo, y hacer que sobresalga el motivo, utilice el estilo de retrato.

[b] Videofilmación de acontecimientos deportivos – ajuste la velocidad de obturación a manual.
- Para videofilmar motivos con movimiento rápido y como protección contra la borrosidad de los mismos.
- Para que el motivo resulte brillante en la obscuridad o en situaciones anormalmente obscuras.
- Para evitar que la apertura se cierre en situaciones anormalmente brillantes.

[c] Videofilmación en ambientes obscuros – ajuste la ganancia a manual.
- Para suprimir la distorsión de los colores cuando videofilme objetos brillantes en lugares obscuros.
- Como protección contra la distorsión de las imágenes cuando videofilme motivos brillantes.

Selecting automatic or manual mode

Settings for each item

Item	Selectable steps	Variation of exposure	Brighter ⟷ Darker
Aperture	13 steps	0.5 EV/step	F1.6 ⟷ F11, CLOSE
Shutter speed	12 steps	1.0 EV/step	1/3 ⟷ 1/10000
Gain	8 steps	0.5 EV / step	+18 dB ⟷ -3dB

Note on recording in manual mode
We recommend that you adjust the focus and white balance manually.

Selección del modo automático o del manual

Ajustes para cada ítem

Ítem	Pasos seleccionables	Variación de la exposición	Más brillante ⟷ Más obscuro
Apertura	13 pasos	0,5 EV/paso	F1.6 ⟷ F11, CLOSE
Velocidad de obturación	12 pasos	1,0 EV/paso	1/3 ⟷ 1/10000
Ganancia	8 pasos	0,5 EV /paso	+18 dB ⟷ -3dB

Nota sobre la videofilmación en el modo manual
Recomendamos que ajuste manualmente el enfoque y el equilibrio del blanco.

Focusing manually

When to use manual focus

In the following cases you should obtain better results by adjusting the focus manually.

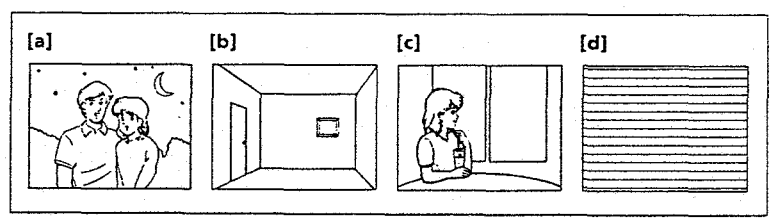

- Insufficient light **[a]**
- Subjects with little contrast - walls, sky, etc. **[b]**
- Too much brightness behind the subject **[c]**
- Horizontal stripes **[d]**
- Subjects through frosted glass
- Subjects beyond nets, etc.
- Bright subject or subject reflecting the light
- Shooting a stationary subject when using a tripod

Enfoque manual

Cuándo utilizar el enfoque manual

En los casos siguientes seguramente obtendrá mejores resultados ajustando manualmente el enfoque.

- Luz insuficiente **[a]**
- Motivos con poco contraste - paredes, cielo, etc. **[b]**
- Demasiado brillo detrás del motivo **[c]**
- Rayas horizontales **[d]**
- Motivos situados detrás de un vidrio con escarcha
- Motivos situados detrás de redes, etc.
- Motivo brillante que refleje luz
- Cuando videofilme un motivo estacionario utilizando un trípode

Focusing manually

Focusing manually

When focusing manually, first focus in telephoto before recording, and then reset the shot length.
(1) Set FOCUS to MANU. The ☞ indicator appears in the viewfinder.
(2) Press the power zoom button on the "T" side so that the bar in the viewfinder moves all the way to the "T" side.
(3) Turn the focus ring to achieve a sharp focus.
(4) Set the desired shot length using the power zoom button.

Enfoque manual

Enfoque manual

Cuando enfoque manualmente, hágalo en primer lugar en telefoto antes de videofilmar, y después reajuste la distancia de videofilmación.
(1) Ponga FOCUS en MANU. En el visor aparecerá el indicador ☞.
(2) Presione el lado "T" de la tecla del zoom motorizado de forma que la barra del visor se mueva completamente hacia el lado "T".
(3) Gire el anillo de enfoque hasta enfocar con claridad.
(4) Ajuste la distancia de videofilmación deseada utilizando la tecla del zoom motorizado.

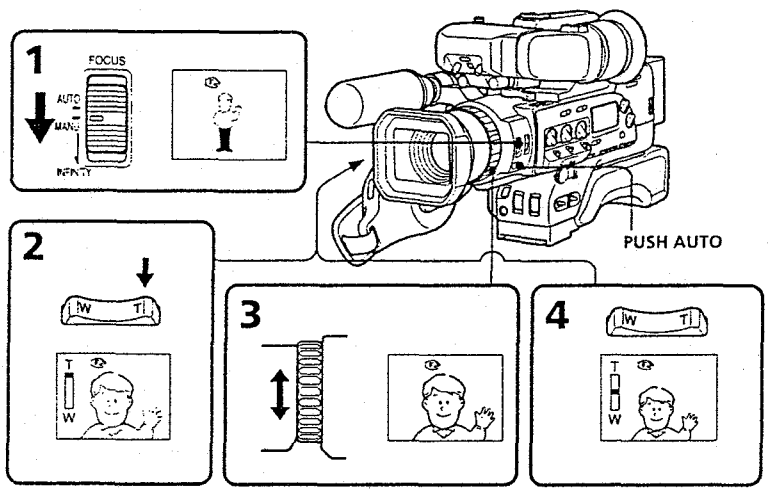

Shooting with auto focusing momentarily

Press PUSH AUTO while focusing manually. Auto focus functions while you are pressing PUSH AUTO.
When you release PUSH AUTO, manual focusing returns.
You can use this feature to switch between two subjects cleanly.

Videofilmación con enfoque automático momentáneo

Presione PUSH AUTO mientras esté enfocando manualmente.
El enfoque automático funcionará mientras esté presionando PUSH AUTO.
Cuando suelte PUSH AUTO, de reanudará el enfoque manual.
Usted podrá utilizar esta función para cambiar limpiamente entre dos motivos.

Focusing manually

To return to autofocus mode
Set FOCUS to AUTO. The indicator in the viewfinder disappears.

Shooting in relatively dark places
Shoot at wide-angle after focusing in the telephoto position.

Shooting fast-moving subjects in relatively bright places
Shoot at wide-angle.

To record a very distant subject
Push FOCUS down to INFINITY. The lens focuses on the most distant subject while FOCUS is held down. When it is released, manual focus mode is resumed.
Use this function when shooting through a window or a screen, to focus on a most distant subject.

Notes on manual focusing
The following indicators may appear:
- when recording a very distant subject.
- when the subject is too close to focus on.

When you shoot close to the subject
Shoot at wide-angle.

Enfoque manual

Para volver al modo de enfoque automático
Ponga FOCUS en AUTO. El indicador desaparecerá del visor.

Para videofilmar en lugares relativamente obscuros
Videofilme en gran angular después de haber enfocado en telefoto.

Para videofilmar motivos de movimiento rápido en lugares relativamente brillantes
Utilice la función de gran angular.

Para videofilmar a una distancia muy corta del motivo
Empuje FOCUS hasta INFINITY. El objetivo enfocará el motivo más distante mientras mantenga presionada FOCUS. Cuando suelte esta tecla, se restablecerá el enfoque manual.
Utilice esta función para videofilmar a través de una ventana o una reja a fin de enfocar el motivo más distante.

Notas sobre el enfoque manual
Es posible que aparezcan los motivos siguientes:
- cuando videofilme un motivo muy distante.
- cuando el motivo se encuentre demasiado cerca como para poder enfocarlo.

Para videofilmar un motivo cercano
Utilice la función de gran angular.

Adjusting the aperture

If the difference between the brightness of the subject and the background is too great, adjust the aperture manually.
When the aperture opens (lowering the F value), focal point becomes smaller (reducing depth of field) so that the background will blur and the subject will be in focus **[a]**. When the aperture closes (raising the F value), focal point becomes greater (increasing depth of field) so that both background and subject will focus clearly **[b]**.

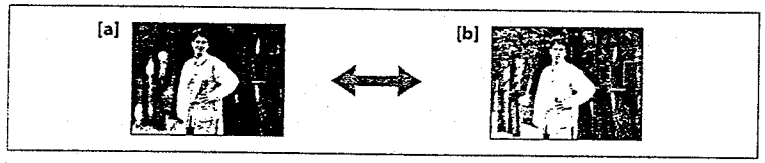

(1) Set AUTO LOCK to OFF.
(2) Set AUTO/MANUAL to the right of the IRIS dial to MANUAL.
The current aperture setting appears in the viewfinder.
(3) Turn IRIS to adjust the aperture.
Using the dial, you can select F1.6, F2, F2.4, F2.8, F3.4, F4, F4.8, F5.6, F6.8, F8, F9.6, F11, and CLOSE. The aperture indicator appears in the viewfinder.
If you select CLOSE, the aperture closes completely, and the picture becomes black (the effect is the same as trying to record with the lens cover attached).

Ajuste de la apertura

Si la diferencia entre el brillo del motivo y el fondo es demasiado grande, ajuste manualmente la apertura.
Al abrir la apertura (reducir el valor F), el punto focal se volverá más pequeño (reducción de la profundidad de campo), el fondo se difuminará, y se enfocará el motivo **[a]**. Al cerrar la apertura (aumento del valor F), el punto focal se volverá más grande (aumento de la profundidad de campo), y tanto el fondo como el motivo se enfocarán claramente **[b]**.

(1) Ponga AUTO LOCK en OFF.
(2) Ponga AUTO/MANUAL de la derecha del mando IRIS en MANUAL.
En el visor aparecerá el ajuste de apertura actual.
(3) Gire IRIS para ajustar la apertura.
Utilizando el mando, podrá seleccionar F1.6, F2, F2.4, F2.8, F3.4, F4, F4.8, F5.6, F6.8, F8, F9.6, F11, y CLOSE. El indicador de apertura aparecerá en el visor.
Si ha seleccionado CLOSE, la apertura se cerrará completamente, y la imagen se volverá negra (el efecto será el mismo que cuando trate de videofilmar con la cubierta del objetivo cerrada).

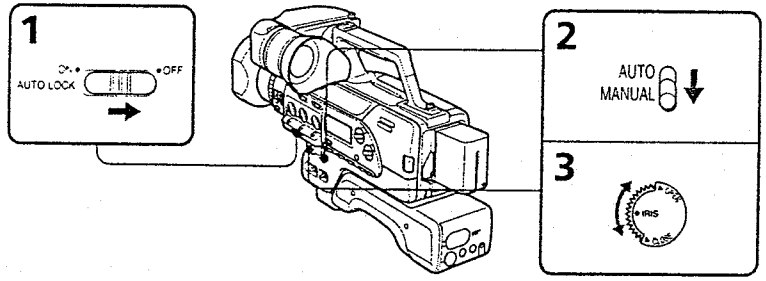

Adjusting the aperture

To return to automatic aperture mode

Set AUTO/MANUAL at the right to AUTO.

About the depth of focus field

The depth of focus field is the in-focus range measured from the distance behind a subject to the distance in front. The depth of focus field can vary with the aperture value and the focal length. Lowering the F value (larger aperture) reduces the depth of focus field. Raising the F value (smaller aperture) provides a larger depth of focus field. Zooming in telephoto position offers a smaller depth of focus field while the depth of focus field in wide-angle position is greater.

Note on the aperture

When zoom is in telephoto, you can open the aperture as far as F2 (not to F1.6).

Ajuste de la apertura

Para volver al modo de apertura automática

Ponga AUTO/MANUAL a la derecha de AUTO.

Nota sobre la profundidad del campo de enfoque

La profundidad del campo de enfoque es el alcance de enfoque medido desde la distancia posterior a la frontal del motivo. La profundidad del campo de enfoque podrá variarse con el valor de apertura y la distancia focal. Si reduce el valor F (mayor apertura) se reducirá la profundidad del campo de enfoque. Si aumenta el valor F (apertura menor) conseguirá una profundidad de campo de enfoque mayor.El zoom en la posición de telefoto ofrecerá un profundidad de campo de enfoque menor, mientras que la profundidad de campo de enfoque en la posición de gran angular será mayor.

Nota sobre la apertura

Cuando el zoom esté en telefoto, podrá abrir la apertura hasta F2 (no hasta F1.6).

Adjusting the shutter speed

Adjust the shutter speed to control the picture quality. When recording sports events, for example, use a high speed shutter to record fast moving objects clearly.
You can select from 6 different shutter speeds SLOW, 50, 100, 215, 1000 and PRESET. SLOW and PRESET have their own menus. Refere to the "To adjust the SLOW SHTR (shutter) or S (shutter) PRESET menu items".
Shutter speed numbers that appear in the viewfinder are inverted. For example, "215" means 1/215 sec.

(1) Set AUTO LOCK to OFF.
(2) Set AUTO/MANUAL under the SHUTTER SPEED dial to MANUAL.
(3) Turn SHUTTER SPEED to select a shutter speed. Using the dial, you can select SLOW, 50, 100, 215, 1000, or PRESET. The shutter speed indicator appears in the viewfinder screen.

Ajuste de la velocidad de obturación

Ajuste la velocidad de obturación para controlar la calidad de las imágenes. Cuando, por ejemplo, videofilme acontecimientos deportivos, utilice una velocidad de obturación alta a fin de poder grabar claramente motivos de movimiento rápido.
Usted podrá seleccionar entre 6 velocidades de obturación diferentes, SLOW, 50, 100, 215, 1000, y PRESET. SLOW y PRESET poseen sus propios menús. Consulte "Para ajustar los ítemes del menú SLOW SHTR, o S PRESET".
Los números de velocidad de obturación que aparecen en el visor estarán invertidos. Por ejemplo "215" significará 1/215.

(1) Ponga AUTO LOCK en OFF.
(2) Ponga AUTO/MANUAL, situado debajo del mando SHUTTER SPEED, en MANUAL.
(3) Gire SHUTTER SPEED para seleccionar una velocidad de obturación. Usted podrá seleccionar SLOW, 50, 100, 215, 1000, o PRESET. En el visor aparecerá el indicador de velocidad de obturación.

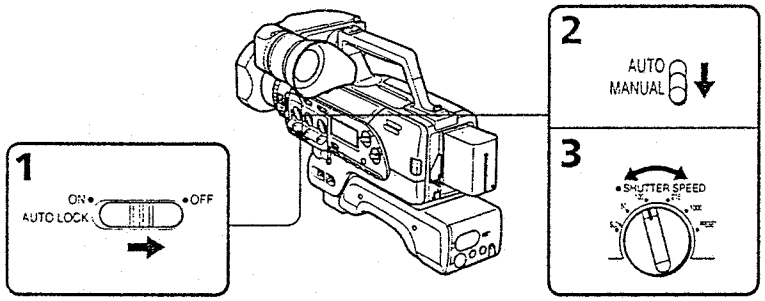

To adjust the SLOW SHTR (shutter) or S (shutter) PRESET menu items

When you want to make a dark scene look brighter or give an object the appearance of motion, use a slow shutter. Select speed from the SLOW SHTR menu.
When you want to choose a shutter, select the appropriate shutter speed from the S PRESET menu.
The chosen speed data is set into memory. When you dial another setting, (e.g. 100), then return to SLOW or PRESET, the previous speed is selected automatically.

(1) Open the cover, then press MENU to display the menu.
(2) Press ∨ or ∧ to select SLOW SHTR or S PRESET, then press EXECUTE.
(3) Press ∨ or ∧ to select a setting, then press EXECUTE.
You can select the following shutter speeds:
SLOW SHTR - 3, 6, 12, 25.
S PRESET - 50, 100, 215, 425, 1000, 1750, 3500, 10000.
(4) Press MENU to erase the menu display.

Para ajustar los ítemes del menú SLOW SHTR o S PRESET

Cuando desee hacer que una escena obscura aparezca más brillante, o para dar a un motivo el aspecto de movimiento, utilice una velocidad de obturación lenta. Seleccione la velocidad del menú SLOW SHTR.
Cuando desee elegir una velocidad de obturación, seleccione la apropiada del menú S PRESET.
Los datos de velocidad elegidos se almacenarán en la memoria. Cuando elija otro ajuste (p. ej., 100), y después vuelva a SLOW o PRESET, se seleccionará automáticamente la velocidad anterior.

(1) Abra la cubierta, y después presione MENU para hacer que se visualice el menú en el visor.
(2) Presione ∨ o ∧ para seleccionar SLOW SHTR o S RESET, y después presione EXECUTE.
(3) Presione ∨ o ∧ para seleccionar un ajuste, y después presione EXECUTE.
Usted podrá seleccionar las velocidades de obturación lenta siguientes:
SLOW SHTR - 3, 6, 12, y 25.
S PRESET - 50, 100, 215, 425, 1000, 1750, 3500, y 10000.
(4) Presione MENU para borrar la visualización del menú.

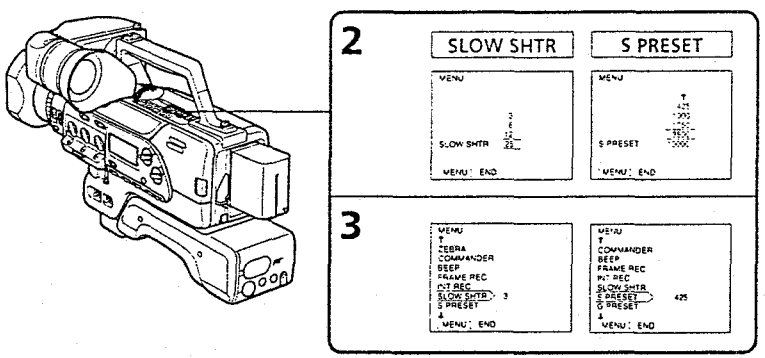

To return to automatic shutter speed mode

Set AUTO/MANUAL below the dial to AUTO.

To select the Best Shutter Speed

Concerning shooting conditions and brightness, refer to the following chart to adjust shutter speed accordingly.

Subject	Shutter speed
• A golf swing or tennis match in fine weather	1/425 – 1/10000
• A landscape shot from a moving car or train • A moving roller coaster in overcast days • An athletic scne, marathon, etc.	1/100 – 1/425
• Indoor sports • Replacement for the ND2 filter (to halve the exposure) in situations of glare a sunny beach or a snow covered mountain. • Recording pictures with less flicker ündr a fluorescent lamp • In sunny weather (to avoid an out-of-focus picture due to a small aperture)	1/100

Notes on the slow shutter speed

- You can set the speed to 1/3, 1/6, 1/12, or 1/25 only when DIGITAL MODE is set to ZOOM/16:9 WIDE.
- When using slow shutter, focusing can become difficult. In this case set focus to manual and put the digital camcorder on a tripod.

Note on the high shutter speed

Using high shutter speed can cause the image to darken. So check brightness using the viewfinder.

Para ajustar velocidad de obturación automática solamente

Ponga el selector AUTO/MANUAL en AUTO.

Para seleccionar la mejor velocidad de obturación

Con respecto a las condiciones de videofilmación y al brillo, consulte la tabla siguiente para ajustar la velocidad de obturación adecuada.

Motivo	Velocidad de obturación
• Swing de golf o tenis con buen tiempo	1/425 – 1/10000
• Paisaje videofilmado desde un automóvil o un tren en movimiento • Montaña rusa en movimiento en un día nublado • Escena atlética, maratón, etc.	1/100 – 1/425
• Deportes en interiores • Reemplazo del filtro ND2 (para reducir la exposición a la mitad) en situaciones de una playa brillante o soleada, o en una montaña nevada • Videofilmación de imágenes con menos parpadeo debajo de una lámpara fluorescente • Con tiempo soleado (para evitar el desenfoque de las imágenes debido a la poca apertura)	1/100

Notas sobre la velocidad de obturación

- Usted solamente podrá ajustar la velocidad de obturación a 1/3, 1/6, 1/12, o 1/25 cuando DIGITAL MODE esté ajustado a ZOOM/16:9 WIDE.
- Cuando utilice velocidad de obturación lenta, el enfoque puede resultar difícil. En este caso, ajuste manualmente el enfoque y coloque la videocámara digital sobre un trípode.

Nota sobre la velocidad de obturación

La utilización de velocidades de obturación altas para videofilmar motivos con movimiento rápido puede causar el obscurecimiento de las imágenes. Por lo tanto, compruebe el brillo utilizando el visor.

Adjusting the gain

If the picture is too dark even with the aperture fully open, and using the slowest acceptable shutter speed, adjust the gain to make the picture as bright as necessary.
When shooting night scenes in automatic setting, the picture may become dark. To brighten the picture, the digital camcorder will automatically turn the gain value up, and picture noise can develop. In this case, adjust the gain in accordance with the atmosphere of the subject.

(1) Set AUTO LOCK to OFF.
(2) Set AUTO/MANUAL under GAIN to MANUAL.
(3) Turn GAIN to adjust the gain.
Using the dial, you can select –3, 0, 3, 6, 9, or PRESET. The gain indicator appears in the viewfinder.
If you turn the dial to PRESET (preset gain), the setting you selected in the menu activates.

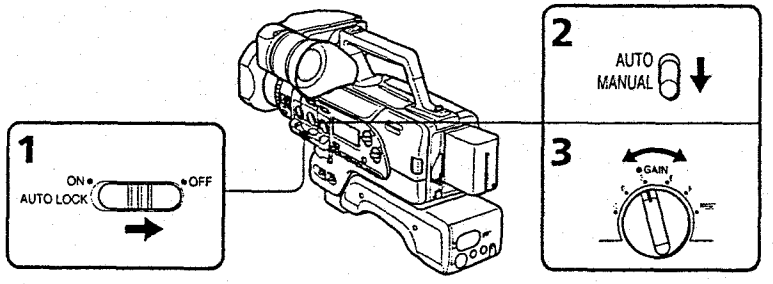

Ajuste de la ganancia

Si la imagen es demasiado obscura, incluso con la apertura completamente abierta, y utilizando la velocidad de obturación más baja permisible, ajuste la ganancia para hacer que las imágenes adquieran el brillo necesario.
Cuando videofilme escenas nocturnas con el ajuste automático, es posible que la imagen se vuelva negra. Para dar brillo a la imagen, la videocámara digital aumentará automáticamente el valor de ganancia y es posible que se produzca ruido. En este caso, ajuste la ganancia de acuerdo con la atmósfera del motivo.

(1) Ponga AUTO LOCK en OFF.
(2) Ponga AUTO/MANUAL, debajo GAIN, en MANUAL.
(3) Gire el mando GAIN para ajustar la ganancia.
Utilizando el mando, podrá seleccionar –3, 0, 3, 6, 9, o PRESET. El indicador de ganancia aparecerá en el visor.
Si gira el mando hasta PRESET (ganancia preajustada), se activará el ajuste que haya seleccionado en el menú.

To adjust the G (gain) PRESET menu item

When you want to choose a gain setting higher than 9, select the appropriate level from the G PRESET menu.
The setting data is set into memory. When you dial another setting, (e.g. 9), then return to PRESET, the previous setting is selected automatically.
(1) Open the cover, then press MENU to display the menu.
(2) Press ∨ or ∧ to select G PRESET, then press EXECUTE.
(3) Press ∨ or ∧ to select a setting, then press EXECUTE.
You can select the following settings: –3, 0, 3, 6, 9, 12, 15, 18 dB.
(4) Press MENU to erase the menu display.

Para ajustar el ítem del menú G PRESET

Cuando desee elegir una ganancia superior a 9, seleccione el nivel apropiado del menú G PRESET.
Los datos del ajuste se almacenarán en la memoria. Cuando realice otro ajuste (p.ej., 9), y después vuelva a PRESET, se seleccionará automáticamente el ajuste anterior.
(1) Abra la cubierta, y después presione MENU para hacer que se visualice el menú en el visor.
(2) Presione ∨ o ∧ para seleccionar G PRESET, y después presione EXECUTE.
(3) Presione ∨ o ∧ para seleccionar un ajuste, y después presione EXECUTE.
Usted podrá seleccionar los ajustes siguientes: –3, 0, 3, 6, 9, 12, 15, y 18 dB.
(4) Presione MENU para borrar la visualización del menú.

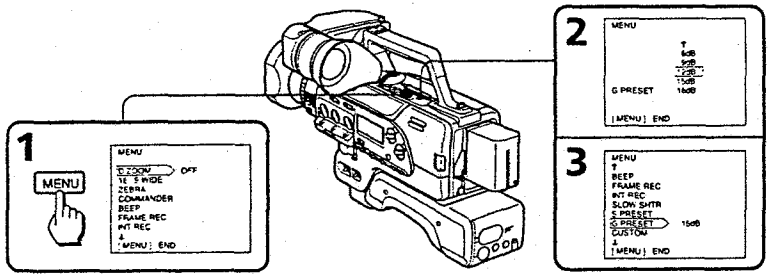

To return to automatic gain mode

Set AUTO/MANUAL below the dial to AUTO.

Note on the gain

If you set GAIN too high, picture noise results.

Para volver al modo de ganancia automática solamente

Ponga AUTO/MANUAL debajp del mando en AUTO.

Nota sobre la ganancia

Si ajuste GAIN hasta un valor demasiado alto, es posible que aparezca ruido en las imágenes.

Tips for manual adjustment

When you shoot in manual adjustment mode, we recommend you to keep the exposure fixed to make a clear picture. This section shows you what the exposure is and how to adjust each item with the exposure fixed.

Understanding the exposure

Exposure is determined by aperture, shutter speed and gain, and is measured in EV (exposure value) as shown below.

Total EV = EV from aperture control
+ EV from shutter speed control
+ EV from gain control

The total exposure value can be varied or maintained at a constant level by controlling the aperture, gain and shutter speed.

Use the following graph to select the setting. One scale corresponds to one step of each item. The exposure changes 1 EV per step for shutter speed, and 0.5 EV per step for apeture and gain.

[a] Vertical axis: Aperture value (F value)
0.5 EV per step
[b] Horizontal axis: Shutter speed (per second)
1 EV per step
[c] Diagonal axis: Gain level (dB)
0.5 EV per step

Reference values
Aperture: F11
Shutter speed: 1/50
Gain level: 0 dB

Sugerencias para el ajuste manual

Cuando videofilme en el modo de ajuste manual, le recomendamos que mantenga la exposición fija para lograr imágenes claras. En esta sección se indica qué es exposición y cómo ajustar cada ítem con la exposición fija.

Nociones sobre exposición

La exposición se determina mediante la apertura, la velocidad de obturación, y la ganancia, y se mide en EV (valor de exposición), como se indica a continuación.

EV total = EV del control de apertura
+ EV del control de velocidad de obturación
+ EV del control de ganancia

El valor de exposición total puede variar o mantenerse a un nivel constante controlando la apertura, la ganancia, y la velocidad de obturación.

Utilice el gráfico siguiente para seleccionar el ajuste. Una escala corresponde a un paso de cada ítem. La exposición cambiará 1 EV por paso para la velocidad de obturación, y 0,5 EV por paso para la apertura y la ganancia.

[a] Eje vertical: Valor de apertura (valor F)
0,5 EV por paso
[b] Eje horizontal: Velocidad de obturación (por segundo)
1 EV por paso
[c] Eje diagonal: Nivel de ganancia (dB)
0,5 EV por paso

Valores de referencia
Apertura: F11
Velocidad de obturación: 1/50
Nivel de ganancia: 0 dB

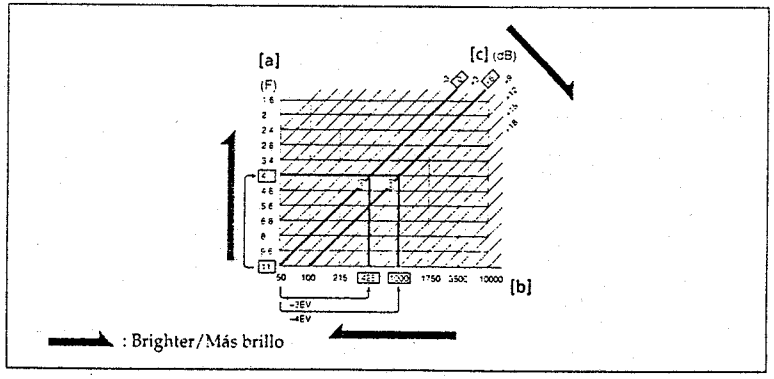

Creating a desired picture without changing the exposure

When the aperture value is F11, the shutter speed is 1/50, and the gain level is 0 dB, adjust the aperture value manually to F4, for example.

When you change the aperture, shutter speed or gain level by 1 step, the exposure changes by 1.0 EV for shutter speed and 0.5 EV for aperture and gain.
If you change the aperture value from F11 to F4 in the above example, the exposure from aperture control becomes brighter by 6 steps (+3 EV). Adjust the shutter speed and the gain so that the exposure becomes darker by –3 EV to not change the total exposure.

Example 1: changing only the shutter speed

To reduce the exposure by –3 EV using the shutter speed, you should increase the speed 3 steps. Change the shutter speed from 1/50 to 1/425 (①).

Example 2: setting the shutter speed to 1/1000 and changing the gain level

When the shutter speed is changed from 1/50 to 1/1000 the EV from the shutter speed control changes to –4 EV. To maintain total exposure, +1 EV (2 steps) should be added by increasing the gain level. Change the gain level from 0 dB to +6 dB (②). Note that when you set the gain level higher, the picture may be distorted.

Notes on manual adjustment

- When recording outdoors, the brightness of a subject may be affected by weather.
- When recording conditions change, we recommend that you reset each item.

Creación de la imagen deseada sin cambiar la exposición

Cuando el valor de apertura sea F11, la velocidad de obturación 1/50, y el nivel de ganancia 0 dB, ajuste manualmente el valor de apertura a F4, por ejemplo.

Cuando cambie la apertura, la velocidad de obturación, o el nivel de ganancia 1 paso, la exposición cambiará 1,0 EV para la velocidad de obturación, y 0,5 EV para la apertura y la ganancia.
Si cambia el valor de apertura de F11 a F4 en el ejemplo anterior, la exposición desde el control de apertura será 6 pasos (+3 EV) más brillante. Ajuste la velocidad de obturación y la ganancia de forma que la exposición se vuelva –3 EV más obscura a fin de no cambiar la exposición total.

Ejemplo 1: Cambio de la velocidad de obturación solamente

Para reducir la exposición –3 EV utilizando la velocidad de exposición, tendrá que aumentar la velocidad 3 pasos. Cambie la velocidad de exposición de 1/50 a 1/425 (①).

Ejemplo 2: Ajuste de la velocidad de exposición a 1/1000 y cambio del nivel de ganancia

Cuando cambie la velocidad de exposición de 1/50 a 1/1000, el EV desde el control de velocidad de obturación cambiará a –4 EV. Para mantener la exposición total, habrá que añadir +1 EV (2 pasos) aumentando el nivel de ganancia. Cambie el nivel de ganancia de 0 dB a +6 dB (②). Tenga en cuanta que cuando aumente el nivel de ganancia, es posible que se distorsionen las imágenes.

Notas sobre el ajuste manual

- Cuando videofilme en exteriores, el brillo del motivo puede verse afectado por el tiempo atmosférico.
- Cuando cambien las condiciones de videofilmación, le recomendamos que reajuste cada ítem.

Adjusting the white balance

White balance is the adjustment to make white subjects look white and to obtain a more natural colour balance. You can obtain better results by adjusting the white balance manually when lighting conditions change quickly or when recording outdoors, e.g. neon signs, fireworks.

Selecting the appropriate mode

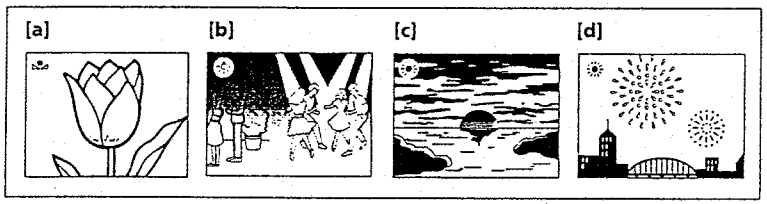

one push white balance mode
- Shooting with lighting condition on the subject set and with the white balance set in a particular condition
- Monochromatic subject or background **[a]**

indoor mode
- Lighting conditions change quickly **[b]**
- A bright place such as a photography studio
- Under sodium or mercury lamps

outdoor mode
- Under a colour matching fluorescent lamp
- Recording a sunset/sunrise, just after sunset, just before sunrise **[c]**, neon signs, or fireworks **[d]**

Ajuste del equilibrio del blanco

El equilibrio del blanco es el ajuste que habrá que realizar para que los motivos blancos aparezcan blancos, y para obtener un equilibrio entre colores más natural. Usted podrá obtener mejores resultados ajustando manualmente el equilibrio del blanco cuando las condiciones de iluminación cambien rápidamente o cuando videofilme en exteriores, p. ej., letreros de neón o fuegos artificiales.

Selección del modo apropiado

Modo de equilibrio del blanco presionando una tecla
- Videofilmación con la iluminación sobre el motivo y con el equilibrio del blanco ajustado para una condición particular.
- Motivo o fondo monocromo **[a]**

Modo de interiores
- Condiciones de iluminación cambiando rápidamente **[b]**
- Lugar brillante como un estudio fotográfico
- Bajo iluminación de lámparas de sodio o de mercurio

Modo de exteriores
- Bajo una lámpara fluorescente con concordancia de color
- Videofilmación de una puesta/salida del sol, justamente después del atardecer, antes del amanecer **[c]**, letreros de neón, o fuegos artificiales **[d]**

Adjusting white balance manually

(1) Set AUTO LOCK to OFF.
(2) Set AUTO/MANUAL under the WHT BAL dial to MANUAL.
(3) Turn WHT BAL to select a white balance. Usually select (indoor mode) or (outdoor mode). To fix the white balance by using one-touch white balance, select and see the next page.

Ajuste manual del equilibrio del blanco

(1) Ponga AUTO LOCK en OFF.
(2) Ponga AUTO/MANUAL debajo del mando WHT BAL en MANUAL.
(3) Gire WHT BAL para seleccionar un equilibrio del blanco.
Normalmente seleccione (modo de interiores) o (modo de exteriores). Para fijar el equilibrio del blanco utilizando una sola tecla, seleccione y vaya a la página siguiente.

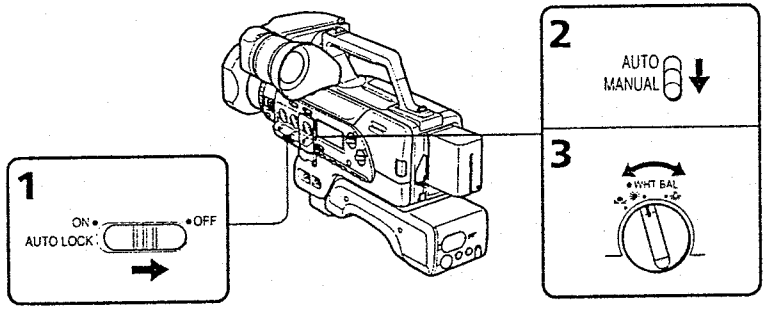

To return to automatic white balance mode

Set AUTO/MANUAL below the dial to AUTO.

Para volver al modo de equilibrio automático del blanco solamente

Ponga AUTO/MANUAL debajo del mando en AUTO.

Locking the white balance setting (One-push white balance mode)

When you set the white balance to one-push white balance mode, the setting is locked and maintained even if lighting conditions change. In addition, if the lithium battery is installed, the setting is saved for one hour if you remove the power source.

(1) While in Standby mode, set AUTO LOCK to OFF

(2) Set AUTO/MANUAL under the WHT BAL dial to MANUAL.

(3) Turn WHT BAL to . The indicator appears in viewfinder.

(4) Shoot a white object, such as paper, fully in the viewfinder.

(5) Press WHITE BALANCE on the front of the digital camcorder.
The indicator flashes rapidly. When the white balance has been adjusted and stored in memory, the indicator stops flashing.

Bloqueo del ajuste del equilibrio del blanco (Modo de equilibrio del blanco con una tecla)

Cuando haya ajustado el equilibrio del blanco al modo de una tecla, el ajuste se bloqueará y conservará incluso aunque cambien las condiciones de iluminación. Además, si está instalada la pila de litio, el ajuste se conservará durante una hora aunque desconecte la fuente de alimentación.

(1) En el modo de espera, ponga AUTO LOCK en OFF.

(2) Ponga el selector AUTO/MANUAL, situado debajo del mando WHT BAL, en MANUAL.

(3) Gire WHT BAL hasta . El indicador aparecerá en el visor.

(4) Videofilme un motivo, como un papel, que llene completamente el visor.

(5) Presione WHITE BALANCE de la parte frontal de la videocámara digital.
El indicador parpadeará rápidamente. Cuando el equilibrio del blanco se haya ajustado y almacenado en la memoria, el indicador dejará de parpadear.

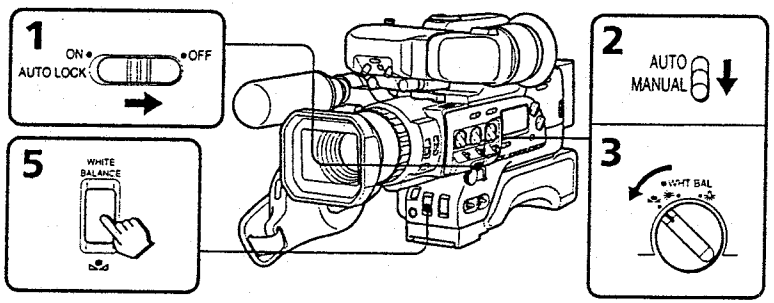

Notes on the indicator in the viewfinder

- The indicator means:
  Slow flashing: white balance is not adjusted
  Fast flashing: white balance is being adjusted (after you pressed WHITE BALANCE)
  Lit steady: white balance has been adjusted.
- If the indicator keeps flashing even when you press WHITE BALANCE , shoot in automatic white balance mode. Set AUTO LOCK to ON and slide AUTO/MANUAL under the WHT BAL dial to AUTO.

Notes on white balance

- When you shoot with studio lighting or video lighting, use (indoor) mode.
- When you shoot under fluorescent lighting, use automatic white balance mode.

Shooting when the lighting condition changes

- After the lighting condition changes, readjust the white balance using the WHITE BALANCE button while the digital camcorder is in Standby mode. The WHITE BALANCE button does not function during recording.
- If you are adjusting the aperture (iris) and shutter speed manually, then when you move from indoors to outdoors or vice-versa, set AUTO LOCK to ON and then set it to OFF again.
- After you move from indoors to outdoors or vice-versa, or detach the battery to replace it, while shooting in automatic white balance mode, point the digital camcorder at a white subject for about 10 seconds before you start recording.

Notas sobre el indicador del visor

- Significado del indicador:
  Parpadeo lento: el equilibrio del blanco no está ajustado.
  Parpadeo rápido: el equilibrio del blanco está ajustándose (después de haber presionado WHITE BALANCE).
  Visualización permanente: el equilibro del blanco ha sido ajustado
- Si el indicador continúa parpadeando después de haber presionado WHITE BALANCE , videofilme en el modo de equilibrio automático del blanco. Ponga AUTO LOCK en ON y deslice AUTO/MANUAL, situado debajo del mando WHT BAL, hasta AUTO.

Notas sobre el equilibrio del blanco

- Cuando videofilme con iluminación de estudio o para vídeo, utilice el modo (interiores).
- Cuando videofilme con iluminación fluorescente, utilice el modo de equilibrio automático del blanco.

Videofilmación cuando cambien las condiciones de iluminación

- Después de haber cambiado las condiciones de iluminación, reajuste el equilibrio del blanco utilizando la tecla WHITE BALANCE mientas la videocámara digital esté en el modo de espera. La tecla WHITE BALANCE no funcionará durante la videofilmación.
- Si está ajustando la apertura (iris) y la velocidad de obturación manualmente, y se traslada de interiores a exteriores, o viceversa, ponga AUTO LOCK en ON y después devuélvalo a OFF.
- Después de haberse trasladado de interiores a exteriores, o viceversa, o de haber extraído y vuelto a instalar la batería, cuando videofilme en el modo de equilibrio automático del blanco, apunte con la videocámara digital hacia un motivo blanco durante unos 10 segundos antes de iniciar la videofilmación.

Using the ND filter

Utilización del filtro ND

The digital camcorder automatically senses the need for the ND filter, in such a case, ND ON/OFF flashes in the display.
Using the ND filter (to filter down to one-tenth the quantity of light), you can prevent the picture from going out of focus under bright conditions.

When ND ON flashes in the viewfinder

Set ND FILTER to ON **[a]**.
The flashing indicator disappears, and the ND indicator remains.

When ND OFF flashes in the viewfinder

Set ND FILTER to OFF **[b]**.
The indicator disappears.

La videocámara digital detectará automáticamente la necesidad del filtro ND. En tal caso, en el visualizador parpadeará ND ON/OFF.
Utilizando el filtro ND (para filtrar una décima parte de la cantidad e luz), podrá evitar que las imágenes resulten desenfocadas en condiciones de gran iluminación.

Cuando en el visor parpadee ND ON

Ponga ND FILTER en ON **[a]**.
El indicador parpadeante desaparecerá, y permanecerá visualizado el indicador ND.

Cuando en el visor parpadee ND OFF

Ponga ND FILTER en OFF **[b]**.
El indicador desaparecerá.

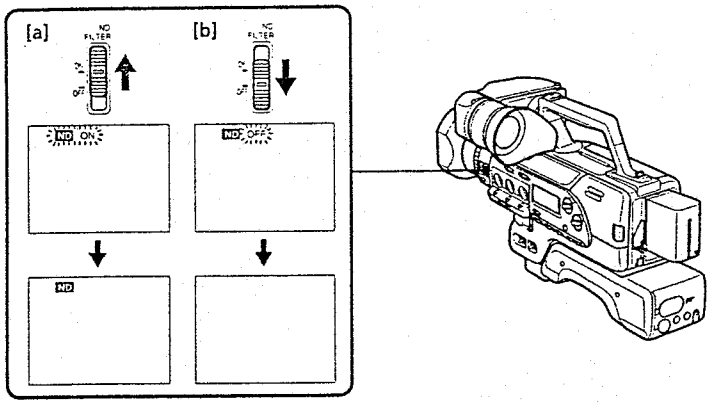

Using the zebra pattern

Utilización del patrón cebra

You can set the digital camcorder to display a zebra pattern (diagonal stripes) **[a]** in the portion of the picture in the viewfinder where the brightness exceeds a certain level. The portion of the picture where the zebra pattern appears is an area of high brightness and overexposure. You can check the picture level of a subject by displaying the zebra pattern.
Before you start recording, use the zebra pattern as a guide for adjusting the aperture, gain, and shutter speed.

(1) Open the cover, then press MENU to display the menu in the viewfinder.
(2) Press ∨ or ∧ to select ZEBRA, then press EXECUTE.
(3) Press ∨ or ∧ to select ON, then press EXECUTE.
(4) Press MENU to erase the menu display.

Usted podrá ajustar la videocámara digital para hacer que visualice un patrón cebra (rayas diagonales) **[a]** en la parte de la imagen del visor en la que el brillo sobrepase cierto nivel. La parte de la imagen en la que aparece el patrón cebra es un área de gran brillo y sobreexposición. Usted podrá comprobar el nivel de la imagen de un motivo haciendo que se visualice el patrón cebra.
Antes de iniciar la videofilmación, utilice el patrón cebra como guía para ajustar la apertura, la ganancia, y la velocidad de obturación.

(1) Abra la cubierta, y después presione MENU para hacer que se visualice el menú en el visor.
(2) Presione ∨ o ∧ para seleccionar ZEBRA, y después presione EXECUTE.
(3) Presione ∨ o ∧ para seleccionar ON, y después presione EXECUTE.
(4) Presione MENU para borrar la visualización del menú.

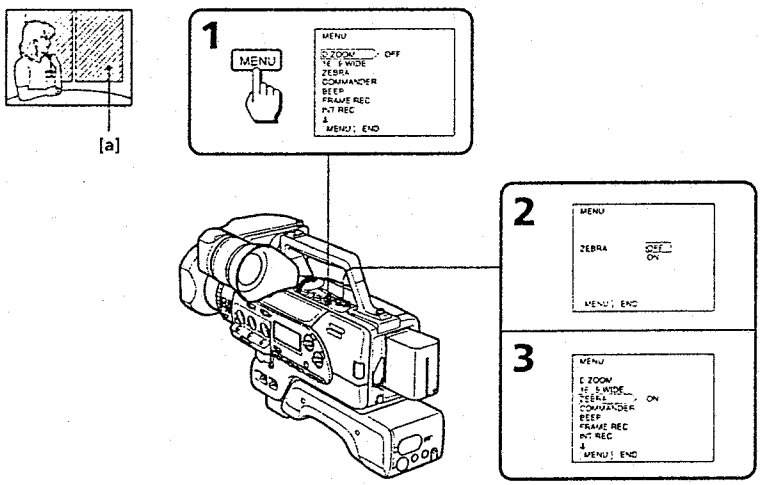

Note on shooting with the zebra pattern

Even though you see the zebra pattern in the viewfinder, the zebra pattern is not recorded.

Nota sobre la videofilmación con el patrón cebra

Aunque usted vea el patrón cebra en el visor, éste no se grabará.

Adjusting the recording sound

You can adjust the recording sound level. Use headphones to monitor the sound when you adjust.

Checking the recording level

Use the level indicator in the display window.
If the input level is excessive, the PEAK indicator lights. If the PEAK indicator remains lit, adjust the recording sound manually, or reduce noise around you.

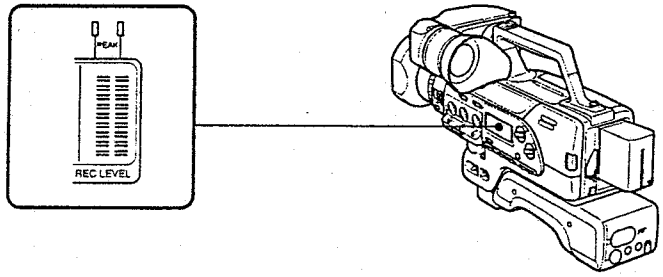

Adjusting the recording level automatically

Set REC LEVEL to AUTO.

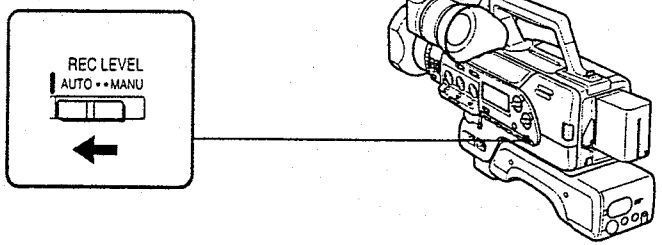

Ajuste del sonido de grabación

Usted podrá ajustar el nivel del sonido de grabación. Cuando ajuste, utilice los auriculares para escuchar el sonido.

Comprobación del nivel de grabación

Utilice el indicador del visualizador.
Si el nivel de entrada es excesivo, se encenderá el indicador PEAK. Si el indicador permanece encendido, ajuste manualmente el sonido de grabación, o reduzca el ruido de sus alrededores.

Ajuste automático del nivel de grabación

Ponga REC LEVEL en AUTO.

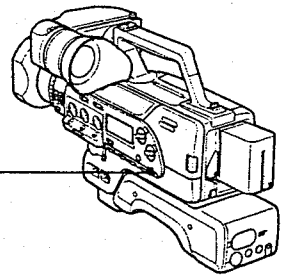

Adjusting the recording level manually

(1) Set REC LEVEL to MANU.
(2) Turn REC LEVEL to adjust the sound level so that the PEAK indicator does not light up (preferably between –12 dB and 0 dB). You can adjust the level of each channel separately.

We recommend using headphones (not supplied) to monitor the sound when you adjust.
You can use AUDIO MONITOR to monitor the L, R, or stereo sound.

Ajuste manual del nivel de grabación

(1) Ponga REC LEVEL en MANU.
(2) Gire REC LEVEL para ajustar el nivel del sonido de forma que el indicador PEAK no se encienda (preferiblemente entre –12 dB y 0 dB). Usted podrá ajustar el nivel de cada canal por separado.

Le recomendamos que utilice auriculares (no suministrados) para escuchar el sonido cuando ajuste.
Usted podrá utilizar AUDIO MONITOR para escuchar el sonido del canal izquierdo (L), del derecho (R), o sonido estéreo.

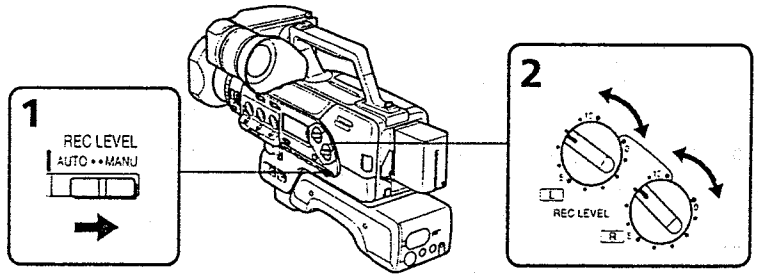

To attenuate the recording level

Set MIC to ATT.
- Normally set to off (green position)
- When recording very loud sounds, set to ATT

To reduce wind noise

If there is a loud wind, set BUILT-IN MIC to WIND, however, low frequency input signal will weaken.

To change the directionality of the microphone

Set DIRECTION SELECT to the desired position (0°/90°/120°).
When set to 0° the sound is in monaural.

Para atenuar el nivel de grabación

Ponga MIC en ATT.
- Normalmente desactívelo (posición verde).
- Cuando grabe sonidos muy fuertes, póngalo en ATT.

Para reducir el ruido del viento

Si hay viento fuerte, deslice BUILT-IN MIC hasta WIND. Sin embargo, la señal de entrada de baja frecuencia se debilitará.

Para cambiar la direccionalidad del micrófono

Ponga DIRECTION SELECT en la posición deseada (0°/90°/120°).
Si lo pone en 0°, el sonido será monoaural.

Using the ND filter

Utilización del filtro ND

The digital camcorder automatically senses the need for the ND filter, in such a case, ND ON/OFF flashes in the display.
Using the ND filter (to filter down to one-tenth the quantity of light), you can prevent the picture from going out of focus under bright conditions.

When ND ON flashes in the viewfinder

Set ND FILTER to ON **[a]**.
The flashing indicator disappears, and the ND indicator remains.

When ND OFF flashes in the viewfinder

Set ND FILTER to OFF **[b]**.
The indicator disappears.

La videocámara digital detectará automáticamente la necesidad del filtro ND. En tal caso, en el visualizador parpadeará ND ON/OFF.
Utilizando el filtro ND (para filtrar una décima parte de la cantidad e luz), podrá evitar que las imágenes resulten desenfocadas en condiciones de gran iluminación.

Cuando en el visor parpadee ND ON

Ponga ND FILTER en ON **[a]**.
El indicador parpadeante desaparecerá, y permanecerá visualizado el indicador ND.

Cuando en el visor parpadee ND OFF

Ponga ND FILTER en OFF **[b]**.
El indicador desaparecerá.

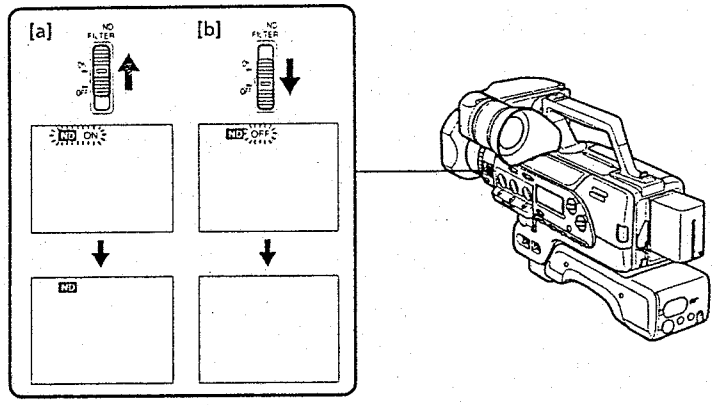

Using the zebra pattern

Utilización del patrón cebra

You can set the digital camcorder to display a zebra pattern (diagonal stripes) **[a]** in the portion of the picture in the viewfinder where the brightness exceeds a certain level. The portion of the picture where the zebra pattern appears is an area of high brightness and overexposure. You can check the picture level of a subject by displaying the zebra pattern.
Before you start recording, use the zebra pattern as a guide for adjusting the aperture, gain, and shutter speed.

(1) Open the cover, then press MENU to display the menu in the viewfinder.
(2) Press ∨ or ∧ to select ZEBRA, then press EXECUTE.
(3) Press ∨ or ∧ to select ON, then press EXECUTE.
(4) Press MENU to erase the menu display.

Usted podrá ajustar la videocámara digital para hacer que visualice un patrón cebra (rayas diagonales) **[a]** en la parte de la imagen del visor en la que el brillo sobrepase cierto nivel. La parte de la imagen en la que aparece el patrón cebra es un área de gran brillo y sobreexposición. Usted podrá comprobar el nivel de la imagen de un motivo haciendo que se visualice el patrón cebra.
Antes de iniciar la videofilmación, utilice el patrón cebra como guía para ajustar la apertura, la ganancia, y la velocidad de obturación.

(1) Abra la cubierta, y después presione MENU para hacer que se visualice el menú en el visor.
(2) Presione ∨ o ∧ para seleccionar ZEBRA, y después presione EXECUTE.
(3) Presione ∨ o ∧ para seleccionar ON, y después presione EXECUTE.
(4) Presione MENU para borrar la visualización del menú.

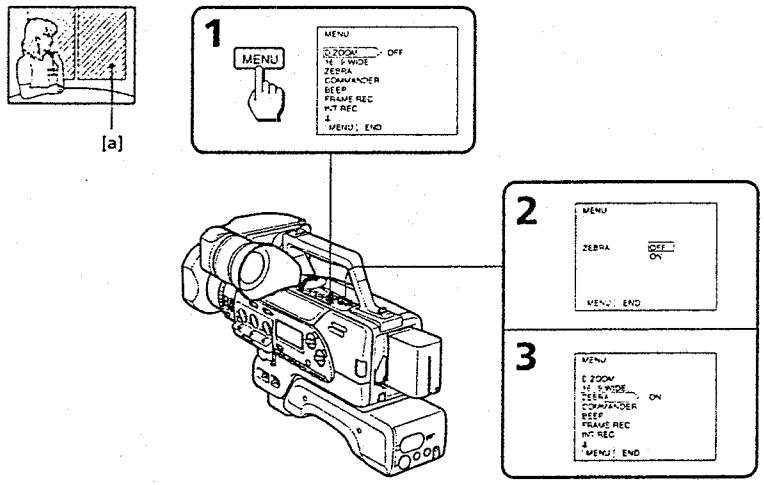

Note on shooting with the zebra pattern

Even though you see the zebra pattern in the viewfinder, the zebra pattern is not recorded.

Nota sobre la videofilmación con el patrón cebra

Aunque usted vea el patrón cebra en el visor, éste no se grabará.

Adjusting the recording sound

You can adjust the recording sound level. Use headphones to monitor the sound when you adjust.

Checking the recording level

Use the level indicator in the display window.
If the input level is excessive, the PEAK indicator lights. If the PEAK indicator remains lit, adjust the recording sound manually, or reduce noise around you.

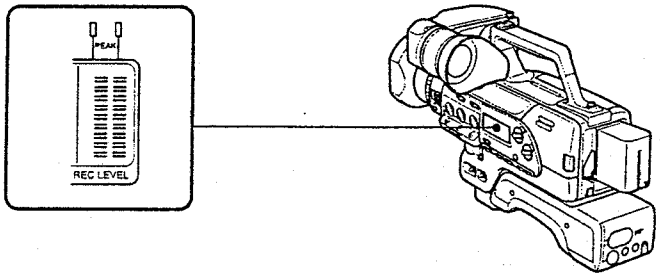

Adjusting the recording level automatically

Set REC LEVEL to AUTO.

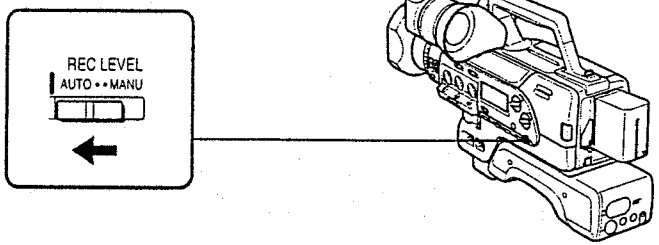

Adjusting the recording level manually

(1) Set REC LEVEL to MANU.
(2) Turn REC LEVEL to adjust the sound level so that the PEAK indicator does not light up (preferably between –12 dB and 0 dB). You can adjust the level of each channel separately.

We recommend using headphones (not supplied) to monitor the sound when you adjust.
You can use AUDIO MONITOR to monitor the L, R, or stereo sound.

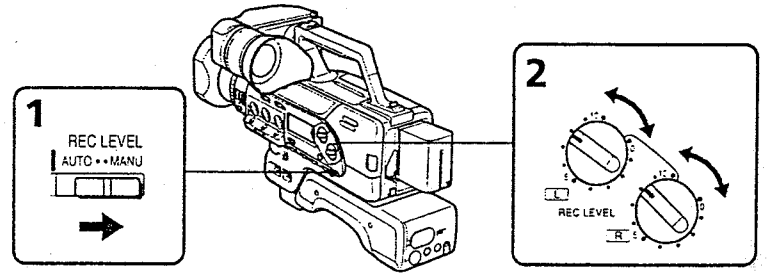

To attenuate the recording level

Set MIC to ATT.
• Normally set to off (green position)
• When recording very loud sounds, set to ATT

To reduce wind noise

If there is a loud wind, set BUILT-IN MIC to WIND, however, low frequency input signal will weaken.

To change the directionality of the microphone

Set DIRECTION SELECT to the desired position (0°/90°/120°).
When set to 0° the sound is in monaural.

Ajuste del sonido de grabación

Usted podrá ajustar el nivel del sonido de grabación. Cuando ajuste, utilice los auriculares para escuchar el sonido.

Comprobación del nivel de grabación

Utilice el indicador del visualizador.
Si el nivel de entrada es excesivo, se encenderá el indicador PEAK. Si el indicador permanece encendido, ajuste manualmente el sonido de grabación, o reduzca el ruido de sus alrededores.

Ajuste automático del nivel de grabación

Ponga REC LEVEL en AUTO.

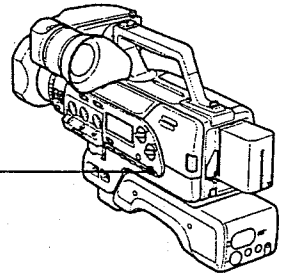

Ajuste manual del nivel de grabación

(1) Ponga REC LEVEL en MANU.
(2) Gire REC LEVEL para ajustar el nivel del sonido de forma que el indicador PEAK no se encienda (preferiblemente entre –12 dB y 0 dB). Usted podrá ajustar el nivel de cada canal por separado.

Le recomendamos que utilice auriculares (no suministrados) para escuchar el sonido cuando ajuste.
Usted podrá utilizar AUDIO MONITOR para escuchar el sonido del canal izquierdo (L), del derecho (R), o sonido estéreo.

Para atenuar el nivel de grabación

Ponga MIC en ATT.
• Normalmente desactívelo (posición verde).
• Cuando grabe sonidos muy fuertes, póngalo en ATT.

Para reducir el ruido del viento

Si hay viento fuerte, deslice BUILT-IN MIC hasta WIND. Sin embargo, la señal de entrada de baja frecuencia se debilitará.

Para cambiar la direccionalidad del micrófono

Ponga DIRECTION SELECT en la posición deseada (0°/90°/120°).
Si lo pone en 0°, el sonido será monoaural.

Re-recording a picture in the middle of a recorded tape

You can insert a scene in the middle of a recorded tape by setting the starting and ending points. The previous recorded portion will be erased.

(1) While the digital camcorder is in Standby mode, keep pressing the + (forward playback) or – (reverse playback) side of EDITSEARCH, and release the button where you want to end the insertion **[b]**. The digital camcorder enters Standby mode again.
(2) Press ZERO SET MEMORY.
The counter is reset to "0:00:00".
"ZERO SET MEMORY" flashes and the ending point is stored in memory.
(3) Hold down the – side of EDITSEARCH until the digital camcorder goes back to the point where you want to start the insertion **[a]**.
(4) Press START/STOP to start re-recording. The insert recording stops automatically at the counter zero point, and the digital camcorder enters Standby mode again. Zero set memory resumes automatically.

Grabación de imágenes en medio de una cinta grabada

Usted podrá insertar una escena en medio de una cinta grabada ajustando los puntos de comienzo y finalización de la misma. La parte previamente grabada se borrará.

(1) Con la videocámara digital en el modo de espera, mantenga pulsado el lado + (reproducción progresiva) o – (reproducción regresiva) de EDITSEARCH, y suelte la tecla cuando desee finalizar la inserción **[b]**. La videocámara digital volverá a entrar en el modo de espera.
(2) Presione ZERO SET MEMORY.
El contador se repondrá a "0:00:00".
Parpadeará "ZERO SET MEMORY", y el punto de finalización se almacenará en la memoria.
(3) Mantenga presionado el lado – de EDITSEARCH hasta que la videocámara digital vuelva al punto en el que desee iniciar la inserción **[a]**.
(4) Para iniciar la grabación, presione START/STOP. La grabación con inserción se parará automáticamente en el punto cero del contador, y la videocámara digital volverá a entrar en el modo de espera. La memoria de cero se reactivará automáticamente.

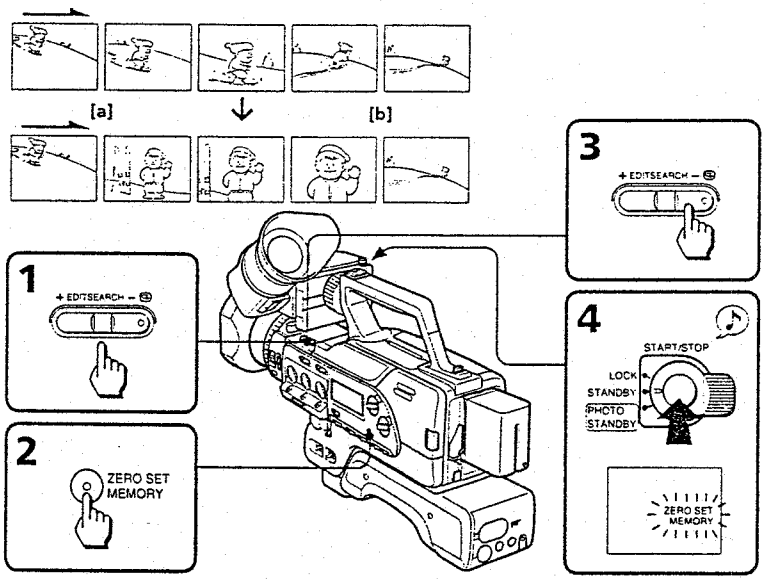

To change the end point

Press ZERO SET MEMORY so that "ZERO SET MEMORY" disappears.
Repeat steps 1 to 3.

Notes on editsearch

- The picture may be distorted at the end of the inserted portion when it is played back.
- Zero set memory may not function when there is a blank portion between pictures on a tape.
- You can re-record without using the zero set memory. Skip steps 1 and 2. Press START/STOP to stop recording.

Para cambiar el punto de finalización

Presione ZERO SET MEMORY de forma que desaparezca "ZERO SET MEMORY".
Repita los pasos 1 a 3.

Notas sobre la búsqueda para edición

- Es posible que las imágenes se distorsionen al final de la parte insertada cuando se reproduzcan.
- La memoria de cero puede no funcionar cuando haya una parte en blanco entre imágenes en la cinta.
- Usted podrá volver a grabar sin utilizar la memoria de cero. Salte los pasos 1 y 2. Para parar la grabación, presione START/STOP.

Searching the recorded picture

When you use a cassette memory-mounted DV cassette (C/// logo*) which can store the recorded date and time, etc., you can search the recorded picture with the date or time using the Remote Commander (**Cassette memory search**). You can also search the photo-recorded pictures only, or the recorded picture in the backward and forward direction from the present position without cassette memory.

*C/// is a trademark.

Searching the recorded picture with the date or time – Cassette memory search

(1) Set the POWER switch to ON, then set CAMERA/PLAYER to PLAYER.
(2) Open the cover, press MENU to display the menu in the viewfinder.
(3) Set CM SEARCH to ON in the menu system.
(4) Press MENU to erase the menu display.
(5) Press SEARCH MODE on the Remote Commander to select date search (search with the date) or photo search (search the photo recorded-pictures only).
(6) On the Remote Commander, press ▶▶| to search forward or |◀◀ to search backward.

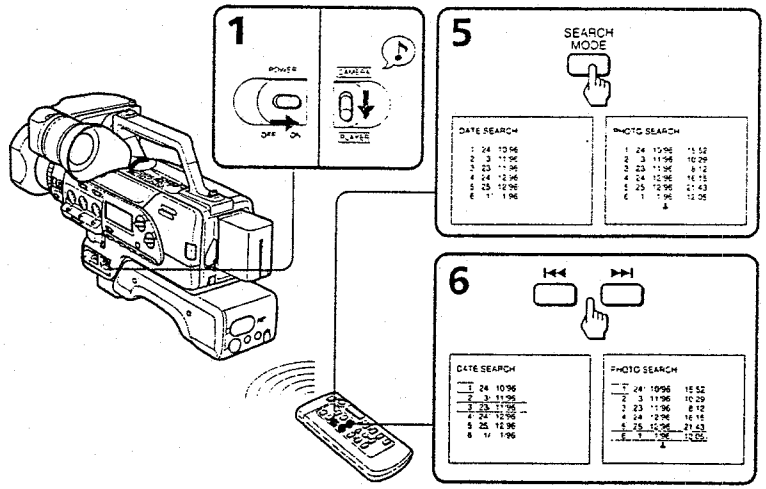

Búsqueda de imágenes grabadas

Cuando utilice un videocassette DV con memoria de cassette (logotipo C/// *) que puede almacenar la fecha y la hora de grabación, etc., podrá buscar imágenes grabadas con la fecha o la hora utilizando el telemando (**Búsqueda de memoria de cassette**). Usted también podrá buscar solamente imágenes grabadas en forma de fotografía, o imágenes grabadas en sentido progresivo o regresivo desde el punto actual sin la memoria de cassette.

*C/// es marca comercial.

Búsqueda de imágenes grabadas con la fecha o la hora - Búsqueda de memoria de cassette

(1) Ponga el interruptor POWER en ON, y después CAMERA/PLAYER en PLAYER.
(2) Abra la cubierta, y después presione MENU para hacer que se visualice el menú en el visor.
(3) Ajuste CM SEARCH a ON en el sistema de menús.
(4) Presione MENU para borrar la visualización del menú.
(5) Presione SEARCH MODE del telemando para seleccionar la búsqueda de fecha (búsqueda utilizando la fecha) o la búsqueda de fotografía (búsqueda de imágenes grabadas en forma de fotografías solamente).
(6) En el telemando, presione ▶▶| para buscar progresivamente o |◀◀ para buscar regresivamente.

Notes on cassette memory search

- You can search up to 6 days for date search and 43 pictures for photo search when you use the 4k-bit cassette memory.
- You cannot use cassette memory search even if you set CM SEARCH to ON in the menu system, if your DV cassette does not have cassette memory.
- Make sure that the lithium battery is installed if using cassette memory.

Searching the recorded picture without using cassette memory

(1) Set the POWER switch to ON, then set CAMERA/PLAYER to PLAYER.
(2) Open the cover, press MENU to display the menu in the viewfinder.
(3) Set CM SEARCH to OFF in the menu system.
(4) Press MENU to erase the menu display.
(5) Press SEARCH MODE on the Remote Commander to select date search (search with the date) or photo search (search the photo-recorded pictures only).
(6) On the Remote Commander, press ▶▶| to search forward or |◀◀ to search backward. Each time you press ▶▶| or |◀◀, the digital camcorder searches for the next scene.

To stop searching

Press □.

If your tape has blank portions between pictures

The digital camcorder may not search for the recorded picture or data may not be stored.

Notes on searching

- The digital camcorder may not search correctly if the beginning of the search portion is too close to the tape head position.
- When you use date search, the digital camcorder plays back the search picture, and when you use photo search, the digital camcorder enters playback pause when it finds the point it was searching for.

Notas sobre la búsqueda de la memoria de cassette

- Usted podrá buscar hasta 6 días para la búsqueda de fecha y hasta 43 imágenes para la búsqueda de fotografías cuando utilice una memoria de cassette de 4 kilobitios.
- Usted no podrá utilizar la búsqueda de memoria de cassette aunque haya ajustado CM SEARCH a ON en el sistema de menús, si su cassette DV carece de memoria de cassette.
- Para utilizar la memoria de cassette, cerciórese de que la pila de litio esté instalada.

Búsqueda de imágenes grabadas sin utilizar la memoria de cassette

(1) Ponga el interruptor POWER en ON, y después CAMERA/PLAYER en PLAYER.
(2) Abra la cubierta, y después presione MENU para hacer que se visualice el menú en el visor.
(3) Ajuste CM SEARCH a OFF en el sistema de menús.
(4) Presione MENU para borrar la visualización del menú.
(5) Presione SEARCH MODE del telemando para seleccionar la búsqueda de fecha (búsqueda utilizando la fecha) o la búsqueda de fotografía (búsqueda de imágenes grabadas en forma de fotografías solamente).
(6) En el telemando, presione ▶▶| para buscar progresivamente o |◀◀ para buscar regresivamente. Cada vez que presione ▶▶| o |◀◀, la videocámara digital buscará escena siguiente.

Para parar la búsqueda

Presione □.

Si su cinta posee partes en blanco entre imágenes

La videocámara digital es posible que no busque imágenes grabadas o que no almacene datos.

Notas sobre la búsqueda

- La videocámara digital puede no buscar correctamente si el comienzo de la parte de búsqueda está demasiado cerca de la posición inicial de la cinta.
- Cuando utilice la búsqueda de fecha, al videocámara digital reproducirá la imagen buscada, y cuando utilice la búsqueda de fotografías, entrará en el modo de reproducción en pausa cuando encuentre el punto que estaba buscando.

Displaying recording data

You can display the date and time as well as system data when you recorded (**Data Code**), on the TV during playback or editing. The Data Code is also displayed in the viewfinder and the display window.

Press DATA CODE on the Remote Commander while playing back. Each time you press DATA CODE, the indicator cycles in the viewfinder as follows:
When you select DATE/CAM from the menu **[a]**:
recorded date and time → various settings → no indication
When you select DATE from the menu **[b]**:
recorded date and time → no indication

Press DATA CODE repeatedly to erase the display.

Visualización de datos grabados

Usted podrá hacer que se visualicen la fecha y la hora, así como los datos del sistema de grabación (**Código de datos**), en el televisor durante la reproducción o la edición. El código de datos aparecerá también en el visor y en el visualizador.

Presione DATA CODE del telemando durante la reproducción. Cada vez que presione la tecla, el indicador cambiará cíclicamente en el visor de la forma siguiente:
Cuando haya seleccionado DATE/CAM en el menú **[a]**:
hora y fecha de grabación → diversos ajustes → sin indicación
Cuando haya seleccionado DATE en el menú **[b]**:
hora y fecha de grabación → sin indicación

Para borrar la visualización, presion repetidamente DATA CODE.

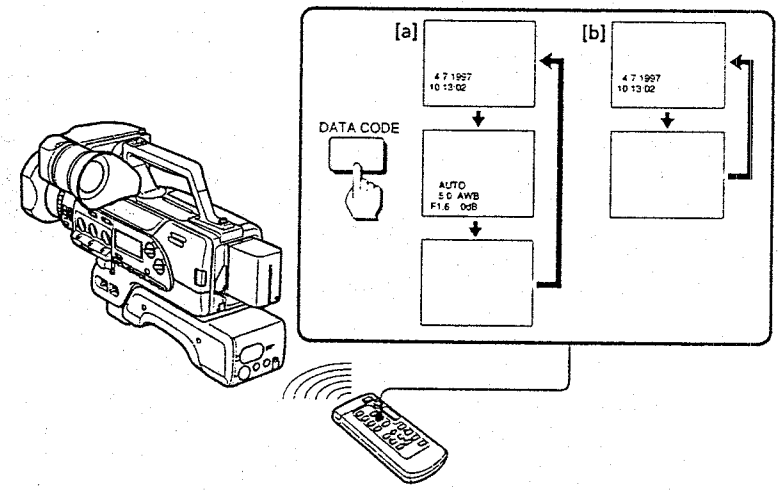

When bars (--:--:--:--) appear

- A blank portion of the tape is being played back.
- The tape was recorded by a digital camcorder without the Data Code function.
- The tape was recorded by a digital camcorder without having date and time set.

Cuando aparezcan barras (--:--:--:--)

- Estará reproduciéndose una parte en blanco de la cinta.
- La cinta fue grabada con una videocámara digital desprovista de función de código de datos.
- La cinta fue grabada en una videocámara digital sin función de ajuste de la fecha ni la hora.

Editing onto another tape

You can create your own video programme by editing with any other DV, mini DV, 8 mm, Hi8, VHS, S-VHS, VHSC, S-VHSC,or Betamax VCR that has video/audio inputs.
You can edit with little deterioration of picture and sound quality when using the DV connecting cable (not supplied).

Before editing

Connect the digital camcorder to the VCR using the supplied A/V connecting cable or the VMC-2DV connecting cable (not supplied). Use this digital camcorder as a player.

To use the A/V connecting cable

Set the input selector on the VCR to LINE.

If your VCR is a monaural type
Connect only the white plug for audio on both the digital camcorder and the VCR. With this connection, the sound is monaural.

To use the DV connecting cable

Simply connect the DV connecting cable to DV OUT of the digital camcorder and DV products to DV IN of DV products.

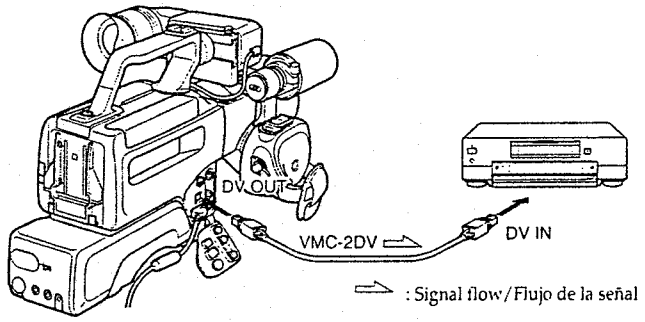

About the DV connecting cable
You can record picture, sound, and data code at the same time on the DV products by using the DV connecting cable only.

Edición en otra cinta

Usted podrá crear sus propios programas de vídeo editando en una videograbadora DV. mini DV, 8 mm, Hi8, VHS, S-VHS, VHSC, S-VHSC, Betamax que posea entradas de audio/vídeo.
Cuando utilice un cable conector DV (no suministrado), podrá editar con poco deterioro de la calidad de las imágenes y del sonido.

Antes de editar

Conecte la videocámara digital a la videograbadora utilizando el cable conector de audio/vídeo suministrado o un cable conector VMC-2DV (no suministrado). Utilice esta videocámara digital para reproducción.

Para utilizar el cable conector de audio/vídeo

Ponga el selector de entrada de la videograbadora en LINE.

Si su videograbadora es de tipo monoaural
Conecte solamente la clavija blanca para audio de la videocámara digital y de la videograbadora. Con esta conexión, el sonido será monoaural.

Para utilizar el cable conector DV

Conecte simplemente el cable conector DV a DV OUT de la videocámara digital, y productos DV a DV IN.

Nota sobre el cable conector DV
Usted podrá grabar simultáneamente imágenes, sonido, y códigos de datos en los productos DV, solamente si utiliza un cable conector DV.

Editing onto another tape

Notes on editing when using the DV connecting cable

- You can connect one VCR only.
- Connect the ⇵ LANC jacks when controlling this digital camcorder from another VCR for editing.
- If you recorded the playback pauses picture via the DV jack, the recorded picture become rough.

Starting editing

(1) Set the POWER switch to ON and then set CAMERA/PLAYER to PLAYER.
(2) Insert a blank tape (or a tape you want to record over) into the recording VCR. Then insert your recorded tape into the digital camcorder.
(3) Play back the recorded tape on the digital camcorder until you locate the point where you want to start editing. Then set the digital camcorder to playback pause mode.
(4) Set the recording VCR to recording pause mode.
(5) Press II on the digital camcorder and VCR simultaneously to start editing.
To edit more scenes, repeat steps 3 to 5.

To stop editing

Press □ on the digital camcorder and VCR.

Note on editing when using the A/V connecting cable

Press DISPLAY on the Remote Commander while editing onto another tape to turn off the display indicators. Otherwise, the indicators will be recorded on the tape.

Note on Fine Synchro Edit

If you connect a video deck that has the Fine Synchro Edit feature to the ⇵ LANC jack of the digital camcorder using a LANC cable (not supplied), the edit will be even more precise .

Notes on editing when using the DV connecting cable

If you record playback pause picture via the DV jack, the recorded picture becomes rough.

Edición en otra cinta

Notas sobre la edición cuando utilice un cable conector DV

- Usted solamente podrá conectar una videograbadora.
- Conecte las tomas ⇵ LANC para controlar esta videocámara digital desde otra videograbadora para edición.
- Si graba imáges con pausas en la reproducción a través de la toma DV, las imágenes grabadas resultarán toscos.

Comienzo de la edición

(1) Ponga el interruptor POWER en ON, y después CAMERA/PLAYER en PLAYER.
(2) Inserte un videocassette en blanco (u otro que desee volver a grabar) en la videograbadora para grabación. Después inserte el videocassette grabado en la videocámara digital.
(3) Ponga en reproducción el videocassette grabado en la videocámara digital hasta localizar el punto en el que desee iniciar la edición. Después ponga la videocámara digital en el modo de reproducción en pausa.
(4) Ponga la videograbadora para grabación en el modo de grabación en pausa.
(5) Para iniciar la edición, presione simultáneamente II de la videocámara digital y de la videograbadora.
Para editar más escenas, repita los pasos 3 a 5.

Para parar la edición

Presione □ de la videocámara digital y de la videograbadora.

Nota sobre la edición cuando utilice el cable conector de audio/vídeo

Presione DISPLAY del telemando durante la edición en otra cinta para hacer que desaparezcan los indicadores del visualizador. De lo contrario, los indicadores se grabarían en la cinta.

Nota sobre la edición sincronizada precisa

Si conecta una videograbadora que posea la función de edición sincronizada precisa a la toma ⇵ LANC de la videocámara digital utilizando un cable LANC (no suministrado), la edición resultará todavía más precisa.

Notas sobre la edición cuando utilice un cable conector DV

Si graba imágenes de reproducción en pausa a través de la toma DV, éstas no serán nítidas.

Audio dubbing

If you recorded in 12 bit recording mode, you can add stereo narration or music to the recording.

Making connections

To use additional audio line in

Connect the LINE OUT jacks of a stereo system to the rear AUDIO IN jacks of the digital camcorder using an audio connecting cord (not supplied) and then set AUDIO INPUT SELECT to LINE.

To use additional microphone

Use the built-in microphone or connect an external microphone (not supplied) to the MIC (PLUG IN POWER) jack, then set AUDIO INPUT SELECT to MIC.

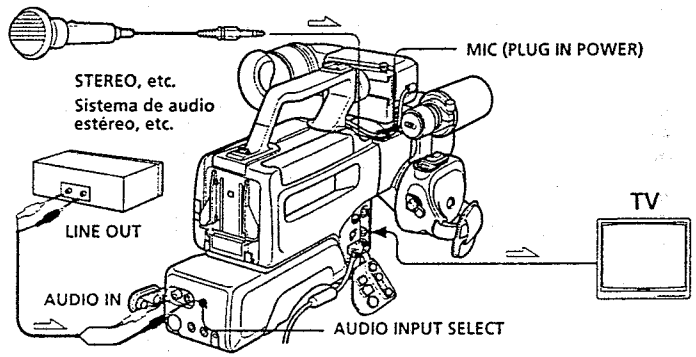

: Signal flow/Flujo de la señal

Audiomontaje

Si ha grabado en el modo de grabación de 12 bitios, podrá añadir una narración estéreo o música a la grabación.

Conexiones

Para utilizar una entrada de línea de audio adicional

Conecte las tomas LINE OUT de un sistema estéreo, a las tomas AUDIO IN del panel posterior de la videocámara digital utilizando un cable conector de audio (no suministrado) y después ponga AUDIO INPUT SELECT en LINE.

Para utilizar un micrófono adicional

Utilice el micrófono incorporado o conecte un micrófono externo (no suministrado) a la toma MIC (PLUG IN POWER), y después ponga AUDIO INPUT SELECT en MIC.

Audio dubbing / Audiomontaje

Recording

(1) Set the POWER switch to ON and then set CAMERA/PLAYER to PLAYER.
(2) Open the cover, press ▷, then ▶▶ or ◀◀, to search for the start and end points of the recording.
(3) Press ❚❚ at the start point of the recording.
(4) Press AUDIO DUB ⬌.
(5) Adjust the recording volume.
(6) Press ❚❚.
Audio dubbing begins.
If you are using a stereo system, press ❚❚ on the stereo at the same time.

Grabación

(1) Ponga el interruptor POWER en ON, y después CAMERA/PLAYER en PLAYER.
(2) Abra la cubierta , presione ▷, y después ▶▶ o ◀◀ para buscar los puntos de comienzo y finalización de la grabación.
(3) Presione ❚❚ en el punto de comienzo de la grabación.
(4) Presione AUDIO DUB ⬌.
(5) Ajuste el volumen de la grabación.
(6) Presione ❚❚.
Se iniciará el audiomontaje.
Si está utilizando un sistema estéreo, presione simultáneamente ❚❚ del sistema de audio estéreo.

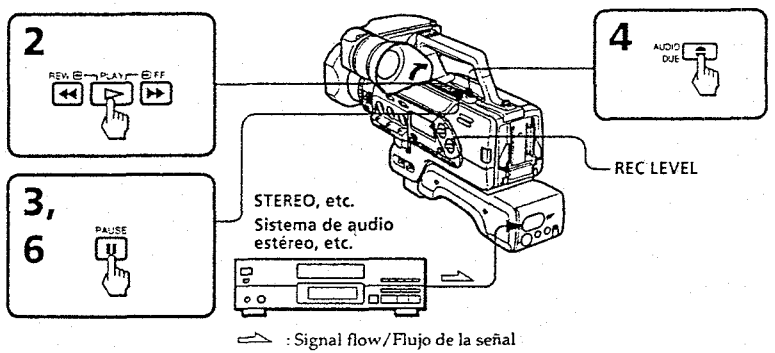

: Signal flow/Flujo de la señal

To stop recording
Press □.

To pause recording
Press ❚❚. To start recording again, press ❚❚.

To adjust the volume
If you set REC LEVEL to AUTO, the volume is automatically adjusted.
To adjust the volume manually, set REC LEVEL to MANU, and turn the REC LEVEL dials.

To find the end point of a recording when dubbing
Use the time code display. Set ZERO SET MEMORY to the end point of the recording, and you will be able to see when you have reached the end point.

Para parar la grabación
Presione □.

Para realizar una pausa en la grabación
Presione ❚❚. Para reanudar la grabación, presione ❚❚.

Para ajustar el volumen
Si ha puesto REC LEVEL en AUTO, el volumen se ajustará automáticamente.
Para ajustar manualmente el volumen, ponga REC LEVEL en MANU, y gire el mando REC LEVEL.

Para buscar el punto final de una grabación cuando duplique
Utilice la visualización de código de tiempo. Ajuste ZERO SET MEMORY al punto final da la grabación, y podrá enterarse de cuándo ha llegado al punto final.

Additional information / Información adicional

Changing the lithium battery in the digital camcorder / Cambio de la pila de litio de la videocámara digital

Your digital camcorder is supplied with a lithium battery installed. When the battery becomes weak or dead, the ♲ indicator flashes in the viewfinder for about 5 seconds when you set the digital camcorder to CAMERA mode with the POWER switch ON. In this case, **replace the battery with a Sony CR2025 lithium battery. Use of any other battery may present a risk of fire or explosion.**
The lithium battery for the digital camcorder lasts for about 1 year under normal operation. (The lithium battery that comes installed at the factory may not last 1 year.)

Su videocámara digital se suministra con una pila de litio instalada. Cuando la pila se debilite o agote, en el visor parpadeará el indicador ♲ durante unos 5 segundos cuando ponga la videocámara digital en el modo CAMERA con el interruptor POWER en ON. En este caso, **reemplace la pila por otra litio CR2025 Sony. La utilización de cualquier otra pila podría suponer el riesgo de incendio o explosión.**
La pila de litio para esta videocámara digital durará aproximadamente 1 año en condiciones normales de funcionamiento. (La pila de litio instalada en fábrica puede que no dure 1 año.)

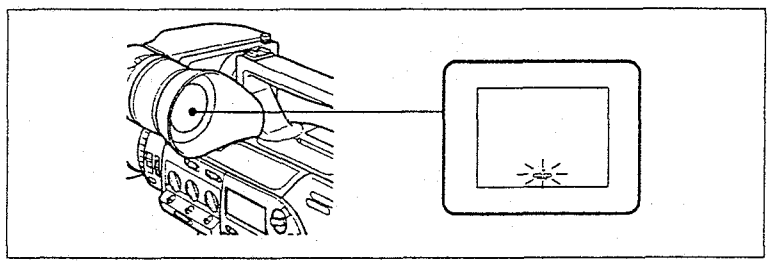

Note on lithium battery
The lithium battery has positive (+) side and negative (–) side as illustrated. **Be sure to insert the lithium battery with the positive side facing out.**

Nota sobre la pila de litio
La pila de litio tiene un lado positivo (+) y otro negativo (–) como se ilustra. **Asegúrese de insertar la pila de litio con el lado positivo hacia afuera.**

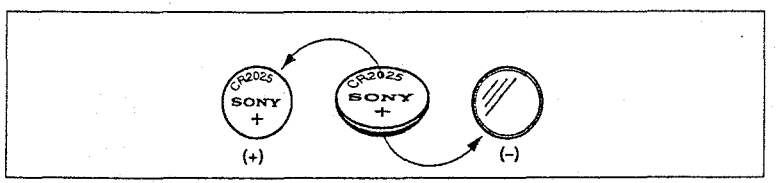

WARNING
The battery may explode if mistreated. Do not recharge, disassemble, or dispose of in fire.

ADVERTENCIA
La pila de litio puede explotar si se trata mal. No la cargue, desarme, ni la tire al fuego.

Caution
Keep the lithium battery out of the reach of children. Should the battery be swallowed, consult a doctor immediately.

Precaución
Mantenga la pila de litio fuera del alcance de los niños. Si alguien traga la pila, consulte inmediatamente a un médico.

Changing the lithium battery in the digital camcorder

Changing the lithium battery

When replacing the lithium battery, keep the battery pack or other power source attached. Otherwise, you will need to reset the date, time and other items in the menu system retained by the lithium battery.

(1) Loosen the two screws under the shoulder pad.
(2) Slide the shoulder pad toward the back of the camera.
(3) Open the lid of the lithium battery compartment.
(4) Push the lithium battery down once and pull it out from the holder.
(5) Install the lithium battery with the positive (+) side facing out. Close the lid.
(6) Slide the shoulder pad toward the front of the camera and tighten the screws.

Cambio de la pila de litio de la videocámara digital

Cambio de la pila de litio

Cuando reemplace la pila, mantenga la batería u otra fuente de alimentación conectada. De lo contrario, tendría que volver a ajustar la fecha, la hora y otros ítemes en el sistema de menús conservados por la pila de litio.

(1) Afloje los dos tornillos situados debajo de la almohadilla para el hombro.
(2) Deslice la almohadilla para el hombro hacia la parte posterior de la videocámara digital.
(3) Abra la tapa del compartimiento de la pila de litio.
(4) Empuje una vez la pila de litio hacia abajo y sáquela del portapila.
(5) Coloque la pila nueva con el lado positivo (+) hacia afuera. Cierre la tapa.
(6) Deslice la almohadilla para el hombro hacia la parte frontal de la videocámara digital y apriete los tornillos.

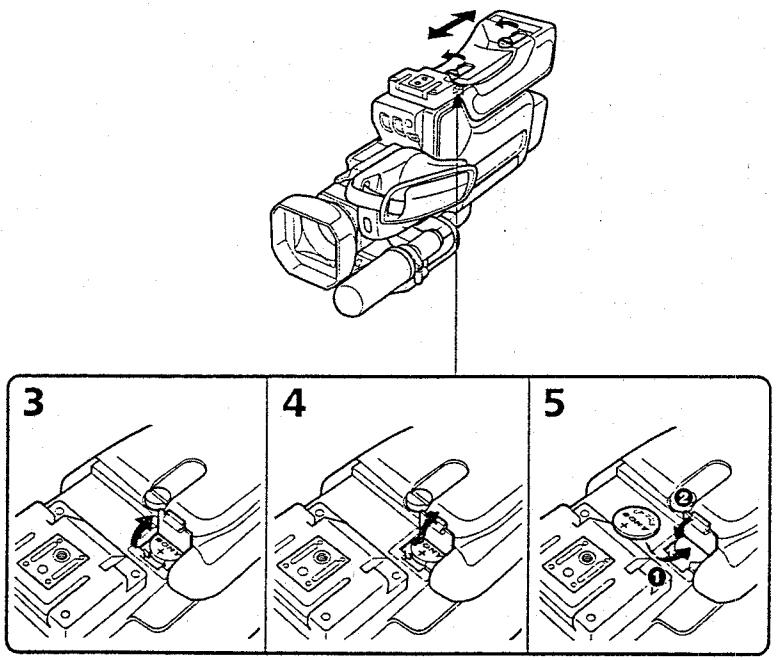

Resetting the date and time

You can reset the date and time in the menu system.

(1) Open the cover, then press MENU to display the menu.
(2) Press ∨ to select CLOCK SET, then press EXECUTE.
(3) Press ∨ or ∧ to select the desired year, then press EXECUTE. Set the day, month, hour, and minutes by pressing ∨ / ∧ and then pressing EXECUTE.
(4) Press MENU to erase the menu display.

Reajuste de la fecha y la hora

Usted podrá reajustar la fecha y la hora con el sistema de menús.

(1) Abra la cubierta, y después presione MENU para hacer que se visualice el menú en el visor.
(2) Presione ∨ para seleccionar CLOCK SET, y después presione EXECUTE.
(3) Presione ∨ o ∧ para seleccionar el año deseado, y después presione EXECUTE. Ajuste el día, el mes, la hora, y los minutos presionando ∨ / ∧, y después presione EXECUTE.
(4) Presione MENU para borrar la visualización del menú.

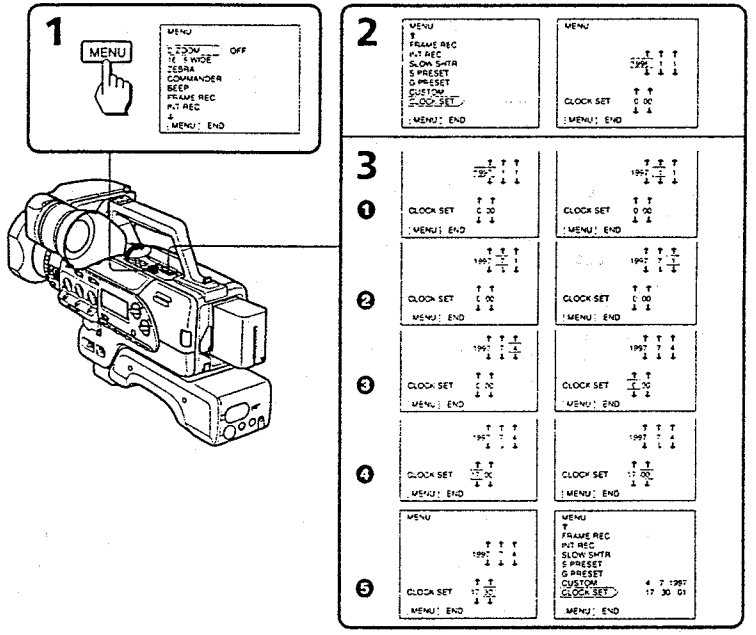

To correct the date and time setting

Repeat the above procedure.

Para corregir la fecha y la hora

Repita el procedimiento anteriormente mencionado.

Resetting the date and time

To check the preset date and time

The date and time are shown in the display window. Which can only be seen when power is on.

The year changes as follows:

1996 ⟷ 1997 ← · · · · → 2026

Note on the time indicator

The internal clock of this digital camcorder operates on a 24-hour cycle.

Reajuste de la fecha y la hora

Para comprobar la fecha y la hora ajustadas

La fecha y la hora se mostrarán en el visualizador. La fecha y la hora solamente podrán verse cuando la alimentación esté conectada.

El año cambiará de la forma siguiente:

1996 ⟷ 1997 ← · · · · → 2026

Nota sobre el indicador de la hora

El reloj interno de esta videocámara funciona según el ciclo de 24 horas.

Notes on video cassettes

Usable cassettes

Use a DV cassette. You cannot use any other mini DV, 8 mm, Hi8 Hi8, VHS, S-VHS, VHSC VHSC, S-VHSC S-VHSC or Betamax cassette.

We recommend using an ME cassette

You can get the highest quality pictures with this digital camcorder using an ME cassette which is the highest quality cassette.
You may not get as good quality with lesser quality cassettes.

Copyright signal

When you play back

Using this digital camcorder, you cannot play back a tape that has recorded copyright control signals for copyright protection of software. "COPY INHIBIT" appears on the TV and in the viewfinder if you try to play back such a tape. This digital camcorder does not record copyright control signals on the tape when it records.

Notas sobre los videocassettes

Videocassette utilizables

Utilice videocassettes DV. Usted no podrá utilizar ningún otro tipo, minicassettes mini DV, 8 mm, Hi8 Hi8, VHS, S-VHS, VHSC VHSC, S-VHSC ni Betamax.

Recomendamos la utilización de videocassettes ME.

Con esta videocámara digital podrá obtener imágenes de la máxima calidad utilizando videocassettes ME, que son los de la mejor calidad.
Usted no podrá obtener buena calidad con videocassettes de inferior calidad.

Señal de derechos de autor

Cuando reproduzca

Cuando utilice esta videocámara digital, usted no podrá reproducir cintas grabadas con señales de control de calidad grabadas para protección de los derechos de autor. Si intenta reproducir una cinta de este tipo, en el televisor o en el visor aparecerá "COPY INHIBIT".
Esta videocámara digital no puede grabar señales de control de derechos de autor.

Notes on video cassettes / Notas sobre los videocassettes

Notes on the DV cassette

Gold-plated connector of the DV cassette

If the gold-plated connector of the DV cassette gets dirty or dust sticks to the connector, the digital camcorder may malfunction when using the cassette memory functions such as cassette memory search.
Clean the connector with the swab once every ten times you eject the cassette [a].

To prevent accidental erasure

Slide the protect tab on the cassette so that the red portion is visible [b].

When affixing a label on the DV cassette

Be sure to affix a label on only the location illustrated below so as not to cause malfunction of the digital camcorder [c].

After using the DV cassette

Rewind the tape to the beginning, put the cassette in its case, and store it in an upright position.

Notas sobre los videocassettes DV

Conector dorado del videocassette DV

Si el conector dorado del videocassette DV se ensucia o le entra polvo, la videocámara digital puede funcionar mal cuando utilice funciones de memoria de cassette tales como búsqueda de memoria de cassette.
Limpie el conector con un palillo de cabeza de algodón una vez cada diez veces que extraiga el videocassette [a].

Para evitar el borrado accidental

Deslice la lengüeta de protección del videocassette de forma que la parte roja quede visible [b].

Cuando pegue una etiqueta en un videocassette DV

Péguela solamente en el lugar indicado en la ilustración siguiente para que no provoque el mal funcionamiento de la videocámara digital [c].

Después de haber utilizado un videocassette DV

Rebobine la cinta hasta su comienzo, coloque el videocassette en su caja, y guárdelo en posición vertical.

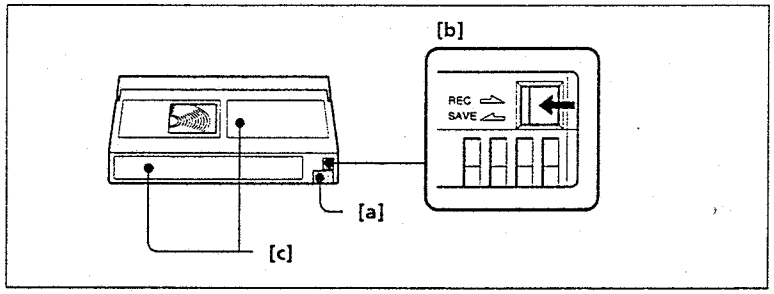

Tips for using the battery pack / Sugerencias para la utilización de la batería

This section shows you how you can get the most out of your battery pack.

En esta sección se indica la forma de obtener el máximo rendimiento de su batería.

Preparing the battery pack

Always carry additional batteries

Have sufficient battery pack power to do 2 to 3 times as much recording as you have planned.

Battery life is shorter in a cold environment

Battery efficiency is decreased, and the battery will be used up more quickly, if you are recording in a cold environment.

To save battery power

Turn STANDBY down to LOCK when not recording to save battery power.
A smooth transition between scenes can be made even if recording is stopped and started again. While you are positioning the subject, selecting an angle, or looking through the viewfinder lens, the lens moves automatically and the battery is used. The battery is also used when a tape is inserted or removed.

When to replace the battery pack

While you are using your digital camcorder, the remaining battery indicator in the viewfinder decreases gradually as battery power is used up.

When the remaining battery indicator reaches the lowest point, the ⌧ indicator may appear and start flashing in the viewfinder.
When the ⌧ indicator in the viewfinder changes from slow flashing to rapid flashing while you are recording, set the POWER switch to OFF on the digital camcorder and replace the battery pack. Leave the tape in the digital camcorder to obtain a smooth transition between scenes after the battery pack has been replaced.

Preparación de la batería

Lleve siempre baterías de repuesto.

Prepare suficientes baterías como para poder alimentar la videocámara digital el doble o el triple del tiempo de videofilmación planeado.

La duración de la batería se acortará en climas fríos.

La eficacia de la batería disminuirá y se consumirá con mayor rapidez si videofilma en climas fríos.

Ahorro de energía de la batería

Gire STANDBY hacia abajo hasta LOCK cuando no vaya a videofilmar para ahorrar energía de la batería. Aunque detenga y reinicie la videofilmación, obtendrá una grabación sin transiciones bruscas entre las escenas. Cuando enfoque el motivo, seleccione un ángulo, o mire a través del, el objetivo se moverá automáticamente y la batería se consumirá. La batería también se utilizará cuando inserte o extraiga un videocassette.

Cuándo reemplazar la batería

Mientras esté utilizando su videocámara digital, el indicador de capacidad restante de la batería del visor se reducirán gradualmente a medida que se descargue la batería.

Cuando el indicador de capacidad restante de la batería alcance el punto más bajo, el indicador ⌧ puede aparecer y comenzar a parpadear en el visor.
Cuando el indicador ⌧ del visor cambie de parpadeo lento a rápido cuando esté videofilmando, ponga el interruptor POWER de la videocámara digital en OFF y reemplace la batería. Deje el videocassette insertado en la videocámara digital a fin de obtener una transición suave entre escenas después de haber reemplazado la batería.

Notes on the rechargeable battery pack

Caution
Never leave the battery pack in temperatures above 60°C (140°F), such as in a car parked in the sun or under direct sunlight.

The battery pack heats up
During charging or recording, the battery pack heats up. This is caused by energy that has been generated and a chemical change that has occurred inside the battery pack. This is not cause for concern and is normal.

Battery pack care
- **Remove the battery pack form the digital camcorder after using it,** and keep it in a cool place. When the battery pack is installed to the digital camcorder, a small amount of current flows to the digital camcorder even if the POWER switch is set to OFF. This shortens battery life.
- The battery pack is always discharging even when it is not in use after charging. Therefore, you should charge the battery pack right before using the digital camcorder.

The switch on the battery pack
This switch is provided so that you can mark the charged battery pack. Set the switch to the "green mark" position when charging is completed. (When removed from the charging adaptor, the switch exposes the green mark. When removed from your digital camcorder, no mark is indicated.)

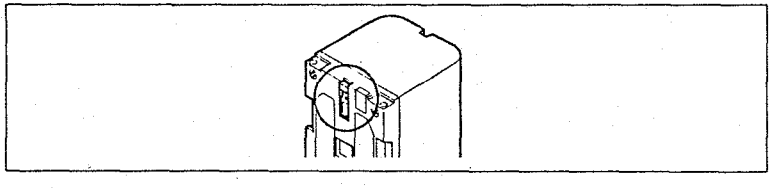

The life of the battery pack
If the battery indicator flashes rapidly just after turning on the digital camcorder with a fully charged battery pack, the battery pack should be replaced with a new fully charged one.

Notas sobre la batería

Precaución
No deje nunca la batería a temperaturas superiores a 60°C, como en un automóvil aparcado al sol o bajo la luz solar directa.

La batería se calienta
Durante la carga o la grabación, la batería se calentará. Esto se debe a la energía que se genera y al cambio químico que se produce en el interior de la batería. Esto no es motivo de preocupación, es normal.

Cuidados de la batería
- **Extraiga la batería de la videocámara digital después de haberla utilizado,** y guárdela en un lugar fresco. Cuando la batería esté instalada en la videocámara digital, fluirá una pequeña cantidad de corriente a través de ésta a pesar de que el interruptor POWER esté en OFF. Esto reducirá la duración de la batería.
- La batería se descarga continuamente, incluso cuando no se utilice después de haberla cargado. Por lo tanto, deberá cargar la batería justo antes de utilizar la videocámara digital.

Señalador de la batería
Este señalador sirve para marcar la batería cargada. Póngalo en la posición de la "marca verde" cuando termine de cargar la batería. (Cuando quite la batería del adaptador, el señalador mostrará la marca verde. Cuando la extraiga de la videocámara, no aparecerá ninguna marca.)

Duración útil de la batería
Si el indicador de estado de la batería parpadea rápidamente después de haber conectado la alimentación de la videocámara digital con una batería completamente cargada, ésta deberá reemplazarse por otra nueva plenamente cargada.

Charging temperature
You should charge batteries at temperatures from 10°C to 30°C (from 50°F to 86°F). Lower temperatures require a longer charging time.

Notes on charging

A brand-new battery pack
A brand-new battery pack is not charged. Before using the battery pack, charge it completely.

Recharge the battery pack whenever you like
You do not have to discharge it before recharging. If you charged the battery pack fully but you did not use it for a long time, it becomes discharged. Then recharge the battery pack before use.

Notes on the terminals

If the terminals (metal parts on the back) are not clean, the battery charge duration will be shortened.
When the terminals are not clean or when the battery pack has not been used for a long time, repeatedly install and remove the battery pack a few times. This improves the contact condition. Also, wipe the + and – terminals with a soft cloth or paper.

Be sure to observe the following
- Keep the battery pack away from fire.
- Keep the battery pack dry.
- Do not open nor try to disassemble the battery pack.
- Do not expose the battery pack to any mechanical shock.

Temperatura de carga
Las baterías deberán cargarse a temperaturas comprendidas entre 10 y 30°C. A temperaturas inferiores, el tiempo de carga se prolongará.

Notas sobre la carga

Batería nueva
Las baterías nuevas no están cargadas. Antes de utilizar una, cárguela por completo.

Cargue la batería cuando lo desee.
No será necesario descargar la batería antes de cargarla. Si ha cargado completamente la batería pero no la utiliza durante mucho tiempo, ésta se descargará. Cargue la batería antes de utilizarla.

Notas sobre los terminales

Si los terminales (partes metálicas del lado posterior) no están limpios, la duración de la batería se acortará.
Cuando los terminales no estén limpios o cuando no haya utilizado la batería durante mucho tiempo, instale y extraiga varias veces la batería. Esto mejorará la condición de contacto. Además, limpie los terminales + y – con paño suave o un papel.

Tenga en cuenta lo siguiente
- Mantenga la batería alejada del fuego.
- Mantenga la batería seca.
- No abra ni desarme la batería.
- No exponga la batería a golpes.

Moisture condensation

If the digital camcorder is brought directly from a cold place to a warm place, moisture may condense inside the digital camcorder, on the surface of the tape, or on the lens. In this condition, the tape may stick to the head drum and be damaged or the unit may not operate correctly. To prevent possible damage under these circumstances, the digital camcorder is furnished with moisture sensors. Please, take the following precautions.

Inside the digital camcorder

If there is moisture inside the digital camcorder, the beep sounds and the indicator flashes. If this happens, none of the functions except cassette ejection will work. Open the cassette compartment, turn off the digital camcorder, and leave it about 1 hour. When ⏏ indicator flashes at the same time, the cassette is inserted in the digital camcorder. Eject the cassette, turn off the digital camcorder, and leave also the cassette about 1 hour. You can continue use of digital camcorder when the indicator does not appear when the power is turned on again.

On the lens

If moisture condenses on the lens, no indicator appears, but the picture becomes dim. Turn off the power and do not use the digital camcorder for about 1 hour.

How to prevent moisture condensation

When bringing the digital camcorder from a cold place to a warm place, put the digital camcorder in a plastic bag and allow it to adapt to room conditions over a period of time.

(1) Be sure to tightly seal the plastic bag containing the digital camcorder.
(2) Remove the bag when the air temperature inside it has reached the temperature surrounding it (after about 1 hour).

Condensación de humedad

Si traslada la videocámara digital directamente de un lugar frío a otro cálido, es posible que se condense humedad en el interior de la misma, en la superficie de la cinta, o en el objetivo. En esta condición, la cinta puede pegarse al tambor de cabezas, y es posible que la unidad se dañe o que no funcione correctamente. Para evitar posibles daños en tales circunstancias, la videocámara dispone de sensores de humedad. Sin embargo, tome las precauciones siguientes.

En el interior de la videocámara digital

Si se condensa humedad en el interior de la videocámara digital, sonará un pitido y parpadeará el indicador . Cuando suceda esto, no trabajará ninguna función excepto la de expulsión del videocassette. Abra el compartimiento del videocassette, desconecte la alimentación de la videocámara digital, y déjela así durante 1 hora por lo menos. Si también parpadea el indicador ⏏, habrá un videocassette insertado en la videocámara digital. Extraiga el videocassette, desconecte la alimentación de la videocámara digital y deje ésta así durante aproximadamente 1 hora. Usted podrá continuar utilizando la videocámara digital cuando el indicador no aparezca al volver a conectar la alimentación.

En el objetivo

Si se condensa humedad en el objetivo, no aparecerá ningún indicador, pero las imágenes se difuminarán. Desconecte la alimentación y deje sin utilizar la videocámara digital durante aproximadamente 1 hora.

Cómo evitar la condensación de humedad

Antes de trasladar la videocámara digital de un lugar frío a otro cálido, métala en una bolsa de plástico y deje que se adapte a las condiciones de la sala durante cierto tiempo.

(1) Cerciórese de sellar bien la bolsa de plástico que contiene la videocámara digital.
(2) Saque la videocámara digital de la bolsa de plástico cuando la temperatura del aire interior haya alcanzado la ambiental (después de aproximadamente 1 hora).

Video head cleaning

To ensure normal recording and clear pictures, clean the video heads often. When the ⊗ indicator flashes in the viewfinder or mosaic noise appears on the playback picture or part of the picture remains, the video heads may be dirty.

[a] Slightly dirty
[b] Excessively dirty

If this happens, clean the video heads with the Sony DV12CL cleaning cassette (not supplied). After checking the picture, if it is still "noisy," repeat the cleaning. (Do not repeat cleaning more than 5 times.)

Caution

Do not use a commercially available wet-type cleaning cassette. It may damage the video heads.

Note

If the DV12CL cleaning cassette (not supplied) is not available in your area, consult your nearest Sony dealer.

Limpieza de las cabezas de vídeo

Para asegurar la grabación normal e imágenes claras, limpie periódicamente las cabezas de vídeo. Cuando el indicador ⊗ parpadee en el visor, o cuando aparezca ruido de mosaico en las imágenes de reproducción, o quede parte de las imágenes, es posible que las cabezas de vídeo estén sucias.

[a] Ligeramente sucias
[b] Excesivamente sucias

Cuando suceda esto, limpie las cabezas de vídeo con un cassette limpiador DV12CL Sony (no suministrado). Después de comprobar las imágenes, si siguen siendo "ruidosas", repita la limpieza. (No repita la limpieza más de 5 veces.)

Precaución

No utilice cassettes limpiadores de tipo húmedo de venta en establecimientos del ramo. Estos cassettes podrían dañar las cabezas de vídeo.

Nota

Si en su localidad no está disponible el cassette limpiador DV12CL (no suministrado), consulte a su proveedor Sony.

Removing dust from inside the viewfinder

(1) While pressing PUSH , open the viewfinder.
(2) Clean the surface with a commercially available blower.
(3) Close the viewfinder until it clicks.

Eliminación del polvo del interior del visor

(1) Para levantar el visor, presione PUSH y, sujetándolo, abra el visor.
(2) Limpie la superficie con un cepillo soplador adquirido en un establecimiento del ramo.
(3) Cierre el visor hasta que chasquee.

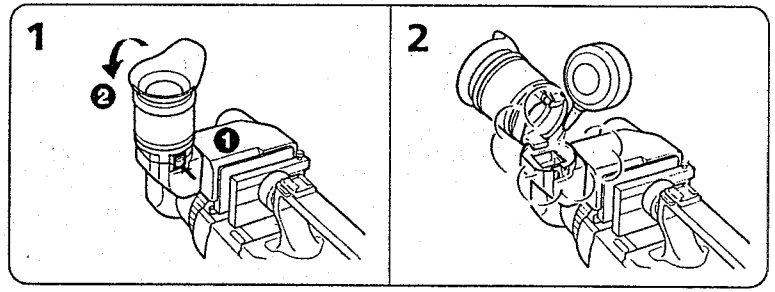

Precautions

Digital camcorder operation

- Operate the digital camcorder on 7.2 V (battery pack) or 8.4 V (AC power adaptor).
- For DC or AC operation, use the accessories recommended in this manual.
- Should any solid object or liquid get inside the casing, unplug the digital camcorder and have it checked by a Sony dealer before operating it any further.
- Avoid rough handling or mechanical shock. Be particularly careful of the lens.
- Keep the POWER switch set to OFF when not using the digital camcorder.
- Do not wrap up the digital camcorder and operate it since heat may build up internally.
- Keep the digital camcorder away from strong magnetic fields or mechanical vibration.

Precauciones

Operación de la videocámara digital

- Alimente la videocámara digital con 7,2 V (batería) u 8,4 V (adaptador de alimentación de CA).
- Para alimentarla con CC o CA, utilice los accesorios recomendados en este manual.
- Si dentro de la caja cae algún objeto sólido o líquido, desconecte la alimentación de la videocámara digital, y haga que sea comprobada por personal cualificado.
- Evite manejar con rudeza y golpear la videocámara. Tenga especial cuidado con el objetivo.
- Cuando no vaya a utilizar la videocámara digital, deje el interruptor POWER en OFF.
- No envuelva la videocámara cuando esté utilizándola ya que se podría recalentar interiormente.
- Mantenga la videocámara alejada de campos magnéticos intensos y de vibraciones mecánicas.

On Handling Tapes

- Do not insert anything into the small holes on the cassette.
- Do not open the tape protect cover or touch the tape.
- Avoid touching or damaging the terminals. To remove dust, clean the terminals with a soft cloth.

Digital camcorder care

- When the digital camcorder is not to be used for a long time, disconnect the power source and remove the tape. Periodically turn on the power, operate the camera and player sections and play back a tape for about 3 minutes.
- Clean the lens with a soft brush to remove dust. If there are fingerprints on it, remove them with a soft cloth.
- Clean the digital camcorder body with a dry soft cloth, or a soft cloth lightly moistened with a mild detergent solution. Do not use any type of solvent which may damage the finish.

AC power adaptor

Charging

- Use only a lithium ion type battery pack.
- Place the battery pack on a flat surface without vibration during charging.
- The battery pack will get hot during charging. This is normal.

Manejo de los videocassettes

- No inserte nada en los pequeños orificios de los videocassettes.
- No abra la cubierta que protege la cinta, ni toque ésta.
- Evite tocar y dañar los terminales. Para eliminar el polvo, limpie los terminales con un paño suave.

Cuidados de la videocámara digital

- Cuando no vaya a utilizar la videocámara digital durante mucho tiempo, desconecte la fuente de alimentación y extraiga el videocassette. Conecte periódicamente la alimentación, accione las secciones de la videocámara y del reproductor, y reproduzca una cinta durante unos 3 minutos.
- Limpie el objetivo con un cepillo soplador para eliminar el polvo. Si hay huellas dactilares en él, elimínelas con un paño suave.
- Limpie el cuerpo de la videocámara con un paño suave y seco, o ligeramente humedecido en una solución poco concentrada de detergente. No utilice ningún tipo de disolvente, ya que podría dañar el acabado.

Adaptador de alimentación de CA

Carga

- Utilice solamente una batería de tipo iones de litio.
- Cargue la batería sobre una superficie plana y exenta de vibraciones.
- La batería se calentará durante la carga. Esto es normal.

Maintenance information and precautions

Others

- Unplug the unit from the mains when not in use for a long time. To disconnect the mains lead, pull it out by the plug. Never pull the mains lead itself.
- Do not operate the unit with a damaged cord or if the unit has been dropped or damaged.
- Do not bend the mains lead forcibly, or put a heavy object on it. This will damage the cord and may cause a fire or electrical shock.
- Be sure that nothing metallic comes into contact with the metal parts of the connecting plate. If this happens, a short may occur and the unit may be damaged.
- Always keep the metal contacts clean.
- Do not disassemble the unit.
- Do not apply mechanical shock or drop the unit.
- While the unit is in use, particularly during charging, keep it away from AM receivers and video equipment because it will disturb AM reception and video operation.
- The unit becomes warm while in use. This is normal.
- Do not place the unit in locations that are:
  - Extremely hot or cold
  - Dusty or dirty
  - Very humid
  - Vibrating

If any difficulty should arise, unplug the unit and contact your nearest Sony dealer.

This mark indicates that this product is a genuine accessory for Sony video products.
When purchasing Sony video products, Sony recommends that you purchase accessories with this "GENUINE VIDEO ACCESSORIES" mark.

Información sobre el mantenimiento y precauciones

Otros

- Cuando no vaya a utilizar la unidad durante mucho tiempo, desenchúfela de la red. Para desconectar el cable de alimentación, tire del enchufe. No tire nunca del propio cable.
- No utilice la unidad con el cable de alimentación dañado, si la ha dejado caer, o si está dañada.
- No doble a la fuerza el cable de alimentación, ni coloque objetos pesados sobre el mismo. Esto podría dañar el cable de alimentación y provocar incendios o descargas eléctricas.
- Cerciórese de que ningún objeto metálico entre en contacto con las partes metálicas de la placa conectora. En caso contrario podría producirse un cortocircuito que dañaría la unidad.
- Mantenga siempre limpios los contactos metálicos.
- No desarme la unidad.
- No golpee ni deje caer la unidad.
- Cuando esté utilizando la unidad, especialmente durante la carga, manténgala alejada de receptores de AM y de equipos de vídeo porque podría interferir en la recepción de AM y en la operación de dichos equipos de vídeo.
- La unidad se calentará cuando esté en funcionamiento. Esto es normal.
- No coloque la unidad en lugares:
  - Extremadamente cálidos o fríos
  - Polvorientos o sucios
  - Muy húmedos
  - Con vibraciones

Si se produce cualquier problema, desenchufe la unidad y póngase en contacto con su proveedor Sony.

Esta marca indica que este producto es un accesorio genuino para productos de vídeo Sony.
Cuando adquiera productos de vídeo Sony, Sony recomienda adquirir accesorios con esta marca "GENUINE VIDEO ACCESSORIES".

Using your digital camcorder abroad

Each country has its own electric and TV colour systems. Before using your digital camcorder abroad, check the following points.

Power sources

You can use your digital camcorder in any country with the supplied AC power adaptor within 100 V to 240 V AC, 50/60 Hz.

Difference in colour systems

This digital camcorder is a PAL system based digital camcorder. If you want to view the playback picture on a TV, it must be a PAL system based TV.
Check the following list.

PAL system countries
Australia, Austria, Belgium, China, Denmark, Finland, Germany, Great Britain, Holland, Hong Kong, Italy, Kuwait, Malaysia, New Zealand, Norway, Portugal, Singapore, Spain, Sweden, Switzerland, Thailand, etc.

PAL-M system country
Brazil

PAL-N system countries
Argentina, Paraguay, Uruguay

NTSC system countries
Bahama Islands, Bolivia, Canada, Central America, Chile, Colombia, Ecuador, Jamaica, Japan, Korea, Mexico, Peru, Surinam, Taiwan, the Philippines, the U.S.A., Venezuela, etc.

SECAM system countries
Bulgaria, Czech Republic, France, Guyana, Hungary, Iran, Iraq, Monaco, Poland, Russia, Slovak Republic, Ukraine, etc.

Utilización de su videocámara digital en el extranjero

Cada país posee su propio sistema eléctrico y sistema de televisión en color. Antes de utilizar su videocámara digital en el extranjero, compruebe los puntos siguientes.

Fuentes de alimentación

Usted podrá utilizar su videocámara digital en cualquier país con el adaptador de alimentación de CA suministrado con 100 a 240 V CA, 50/60 Hz.

Diferencias en los sistema de color

Esta videocámara digital está basada en el sistema PAL. Si desea contemplar las imágenes de reproducción en un televisor, éste deberá estar basado en el sistema PAL.
Compruebe la lista siguiente.

Países con sistema PAL
Alemania, Australia, Austria, Bélgica, China, Dinamarca, España, Finlandia, Gran Bretaña, Holanda, Hong Kong, Italia, Kuwait, Malasia, Noruega, Nueva Zelanda, Portugal, Suecia, Suiza, Tailandia, etc.

País con el sistema PAL-M
Brasil

Países con el sistema PAL-N
Argentina, Paraguay, Uruguay

Países con el sistema NTSC
Bolivia, Canadá, Centroamérica, Colombia, Corea, Chile, Ecuador, EE.UU., Filipinas, Islas Bahamas, Jamaica, Japón, México, Perú, Surinam, Taiwan, Venezuela, etc.

Países con sistema SECAM
Bulgaria, Francia, Guayana, Hungría, Irán, Iraq, Mónaco, Polonia, República de Checoslovaquia, República de Eslovaquia, Rusia, Ucrania, etc.

Identifying the parts

Identificación de partes

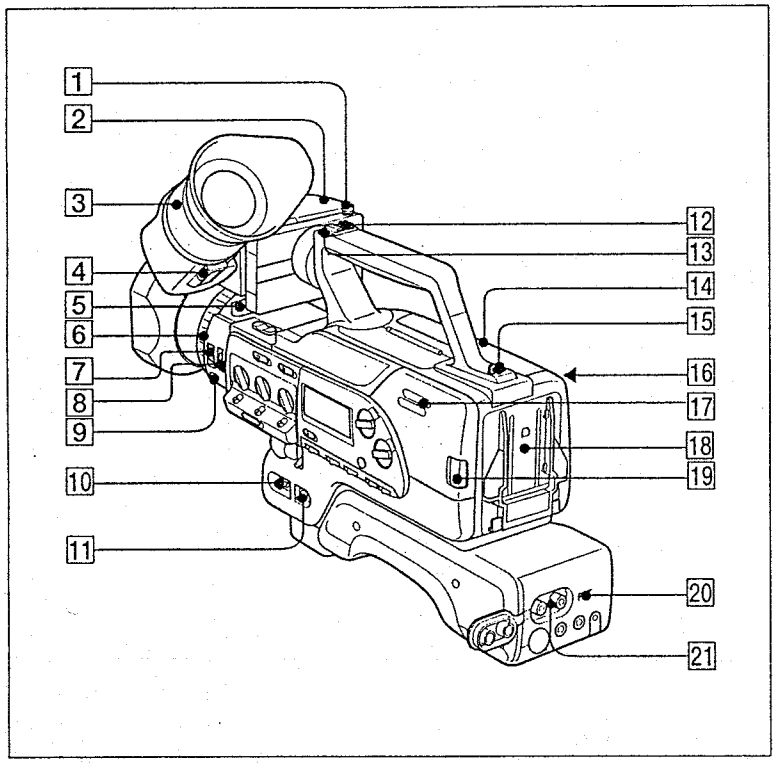

1 Stopper (p. 8)
2 Viewfinder (p. 8, 16, 92)
3 Viewfinder adjustment ring (p. 16)
4 PUSH button (p.92)
5 Viewfinder release lever (p. 21)
6 Focus ring (p. 49)
7 FOCUS switch (p. 49)
8 ND FILTER switch (p. 64)
9 PUSH AUTO button (p. 49)
10 POWER switch (p. 15)
11 CAMERA/PLAYER switch (p. 15)
12 Accessory shoe (p. 41)
13 Hook for shoulder strap (p. 121)
14 Cassette compartment and cassette compartment cover (p. 13)
15 Hook for shoulder strap (p. 121)
16 EJECT ⏏ button (p. 14)
17 Speaker (p. 18)
18 Battery mounting surface (p. 12)
19 BATT lever (p. 12)
20 AUDIO INPUT SELECT switch (p. 79)
21 AUDIO IN jacks (p.79)

1 Retén (pág. 8)
2 Visor (pág. 8, 16, 92)
3 Anillo de ajuste del visor (pág. 16)
4 Botón de desmontaje del visor (PUSH) (pág. 92)
5 Palanca de liberación del visor (pág. 21)
6 Anillo de enfoque (pág. 49)
7 Selector de enfoque (FOCUS) (pág. 49)
8 Interruptor de filtro ND (ND FILTER) (pág. 64)
9 Tecla de enfoque automático (PUSH AUTO) (pág. 49)
10 Interruptor de alimentación (POWER) (pág. 15)
11 Selector de videocámara/reproductor (CAMERA/PLAYER) (pág. 15)
12 Zapata para accesorios (pág. 41)
13 Gancho para la bandolera (pág. 121)
14 Compartimiento del videocassette y cubierta del mismo (pág. 13)
15 Gancho para la bandolera (pág. 121)
16 Tecla de expulsión (EJECT ⏏) (pág. 14)
17 Altavoz (pág. 18)
18 Superficie de montaje de la batería (pág. 12)
19 Palanca de liberación de la batería (BATT) (pág. 12)
20 Selector de entrada de audio (AUDIO INPUT SELECT) (pág. 79)
21 Tomas de entrada de audio (AUDIO IN) (pág. 79)

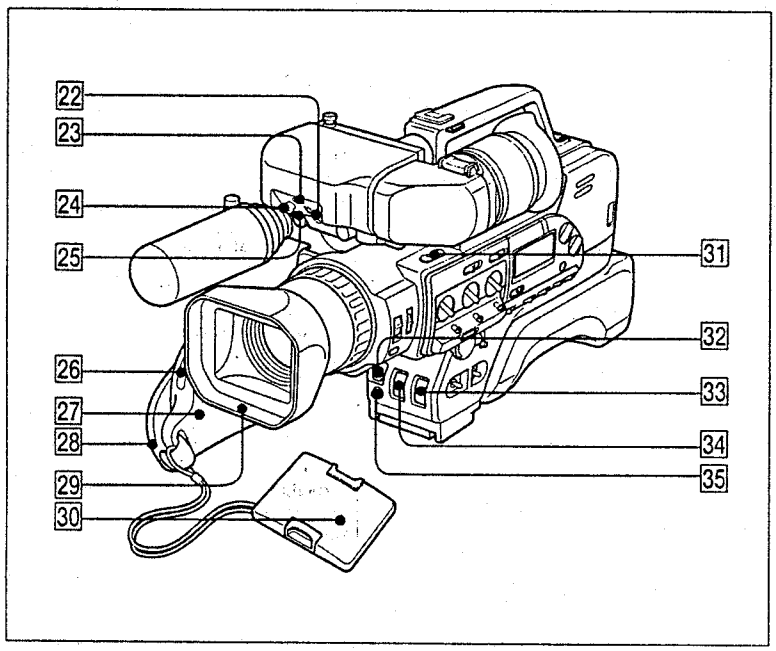

22 **BRIGHT knob** (p. 16)
23 **TALLY lamp** (p. 17)
24 **CONTR knob** (p. 16)
25 **TALLY switch** (p. 17)
26 **Front Remote Commander sensor** (p. 119)
27 **Grip**
28 **Grip strap**
29 **Lens hood**
You can attach a wide teleconversion lens (not supplied) by removing the lens hood. To remove the lens hood, loosen the lens hood screw 50, and unscrew the lens hood counterclockwise.
30 **Lens hood cap** (p. 15)
31 **EDITSEARCH button** (p. 23)
32 **Front START/STOP button** (p. 21)
33 **FADER/OVERLAP button** (p. 36, 37)
34 **WHITE BALANCE** (one-push white balance) **button** (p. 62)
35 **CP CHECK button** (p. 71)

22 **Mando de brillo (BRIGHT)** (pág. 16)
23 **Lámpara indicadora (TALLY)** (pág. 17)
24 **Mando de contraste (CONTR)** (pág. 16)
25 **Interruptor de lámpara indicadora (TALLY)** (pág. 17)
26 **Sensor de control remoto frontal** (pág. 119)
27 **Empuñadura**
28 **Correa de la empuñadura**
29 **Visera del objetivo**
Usted podrá fijar un objetivo para teleconversión de gran angular (no suministrado) quitando la visera del objetivo. Para quitar la visera del objetivo, afloje el tornillo de la misma 50, y desatornille la visera del objetivo girándola hacia la izquierda.
30 **Tapa de la visera del objetivo** (pág. 15)
31 **Tecla de búsqueda para edición (EDITSERACH)** (pág. 23)
32 **Tecla de inicio/parada (START/STOP) frontal** (pág. 21)
33 **Tecla de aumento gradual y desvanecimiento/superposición (FADER/OVERLAP)** (pág. 36, 37)
34 **Tecla de equilibrio del blanco con un toque (WHITE BALANCE)** (pág. 62)
35 **Tecla de comprobación de ajustes personales (CP CHECK)** (pág. 71)

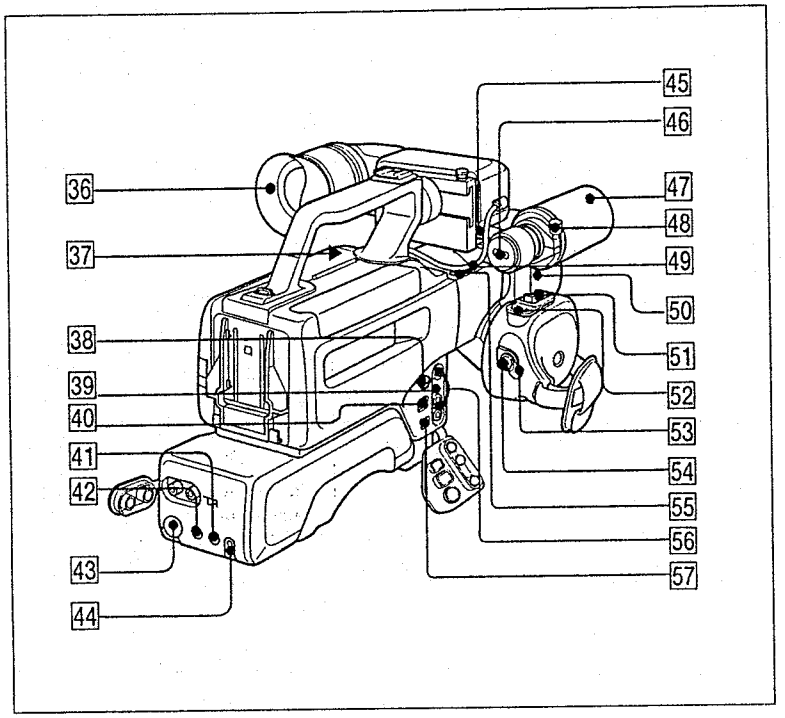

36 **Eyecup**
37 **Viewfinder connector** (p. 8)
38 **S VIDEO OUT jack** (p. 25)
39 **RFU DC OUT jack** (p. 26)
40 **DV OUT jack** (p. 77)
41 **LANC jack**
stands for Local Application Control Bus System. The control jack is used for controlling the tape transport of video equipment and peripherals connected to it. This jack has the same function as the jack indicated as CONTROL L or REMOTE.
42 **(headphones) jack** (p. 18)
43 **MONITOR LEVEL dial** (p. 18)
44 **Tally lamp/Rear Remote Commander sensor** (p.17, 119)
45 **MIC (PLUG IN POWER) jack** (p. 18)
Connect an external microphone (not supplied). This jack also accepts a "plug-in-power" microphone.
46 **DIRECTION SELECT switch** (p. 18)
47 **Built-in microphone** (p. 67)
48 **Microphone wind screen screw**
Loosen the screw to remove wind screen.
49 **MIC switch** (p. 68)
50 **Lens hood screw**
51 **Power zoom button** (p. 19)
52 **PHOTO button** (p. 40)
53 **STANDBY (LOCK/STANDBY/PHOTO STANDBY) switch** (p. 15)
54 **START/STOP button** (p. 15)
55 **BUILT-IN MIC switch** (p. 67)
56 **AUDIO/VIDEO output jacks** (p. 25)
57 **DC IN jack** (p. 30)

36 **Ocular**
37 **Conector para el visor** (pág. 8)
38 **Toma de salida de vídeo S (S VIDEO OUT)** (pág. 25)
39 **Toma de salida de CC para unidad de radiofrecuencia (RFU DC OUT)** (pág. 26)
40 **Toma de salida de DV (DV OUT)** (pág. 77)
41 **Toma LANC**
es el símbolo del sistema de bus de control de aplicación local. La toma de control se utiliza para controlar el transporte de cinta de equipos de vídeo y periféricos a él conectados. Esta toma tiene la misma función que la toma indicada con CONTROL L o REMOTE.
42 **Toma para auriculares ()** (pág. 18)
43 **Mando de nivel de escucha (MONITOR LEVEL)** (pág. 18)
44 **Lámpara indicadora/sensor de control remoto posterior** (pág. 17,119)
45 **Toma para micrófono con alimentación a través de la clavija [MIC (PLUG IN POWER)]** (pág. 18)
Conéctele un micrófono externo (no suministrado). Esta toma acepta también micrófonos con "alimentación a través de la clavija".
46 **Selector de dirección del micrófono (DIRECTION SELECT)** (pág. 18)
47 **Micrófono incorporado** (pág. 67)
48 **Tornillo de la pantalla contra el viento del micrófono**
Afloje este tornillo para quitar la pantalla contra el viento.
49 **Interruptor del micrófono incorporado (MIC)** (pág. 68)
50 **Tornillo de la visera del objetivo**
51 **Tecla del zoom motorizado** (pág. 19)
52 **Tecla de toma de fotografías (PHOTO)** (pág. 40)
53 **Selector de espera (bloqueo/espera/fotografías) [STANDBY (LOCK/STANDBY/PHOTO STANDBY)]** (pág. 15)
54 **Tecla de inicio/parada (START/STOP)** (pág. 15)
55 **Interruptor del micrófono incorporado (BUILT-IN MIC)** (pág. 67)
56 **Tomas de salida de audio/vídeo (AUDIO/VIDEO)** (pág. 25)
57 **Toma de entrada de alimentación de CC (DC IN)** (pág. 30)

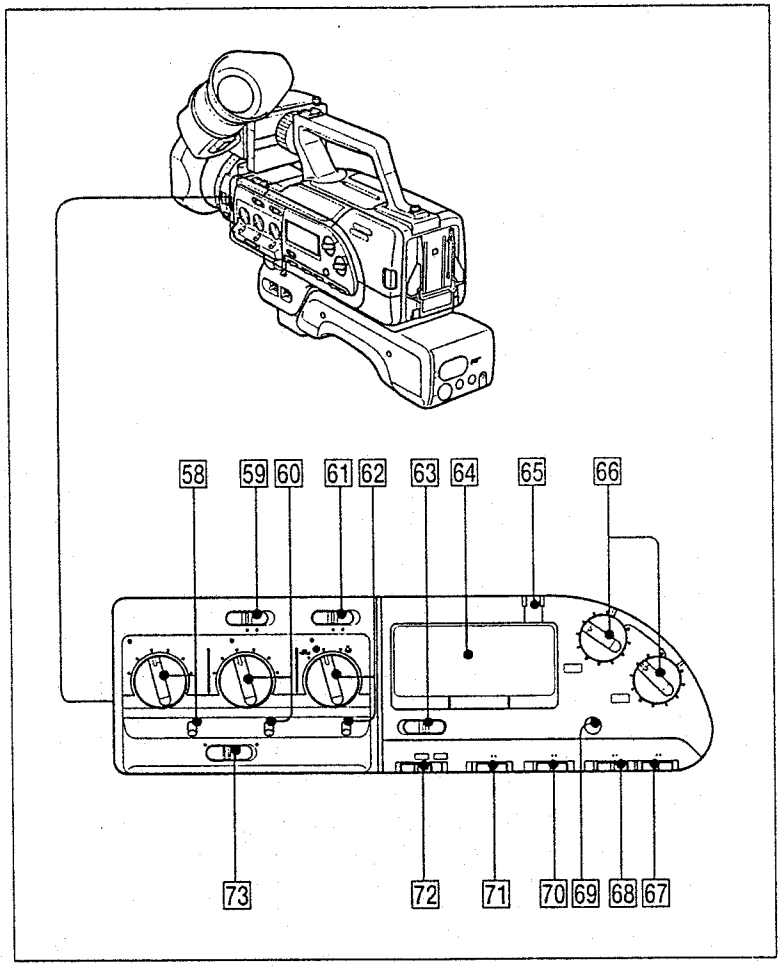

58 SHUTTER SPEED dial and AUTO/MANUAL switch (p. 53)
59 DIGITAL MODE switch (p. 19, 37, 38)
60 GAIN dial and AUTO/MANUAL switch (p. 56)
61 STEADY SHOT switch (p. 69)
62 WHT BAL (white balance) dial and AUTO/MANUAL switch (p. 61)
63 DISPLAY LIGHT switch (for display window)
64 Display window (p. 121)
65 PEAK indicators (L and R) (p. 66)
66 REC LEVEL dial (p. 67)
67 REC LEVEL switch (p. 67)
68 MIC SELECT switch (p. 68)
69 ZERO SET MEMORY button (p. 72)
70 AUDIO MODE switch (p. 18)
71 SPEAKER switch (p. 18)
72 AUDIO MONITOR switch (p. 67)
73 AUTO LOCK switch (p. 15)

58 Mando de velocidad de obturación (SHUTTER SPEED) y selector de ajuste automático/manual (AUTO/MANUAL) (pág. 53)
59 Selector de modo digital (DIGITAL MODE) (pág. 19, 37, 38)
60 Mando de ganancia (GAIN) y selector de ajuste automático/manual (AUTO/MANUAL) (pág. 56)
61 Interruptor de videofilmación estable (STEADY SHOT) (pág. 69)
62 Mando de equilibrio del blanco (WHT BAL) y selector de ajuste automático/manual (AUTO/MANUAL) (pág. 61)
63 Interruptor de iluminación del visualizador (DISPLAY LIGHT)
64 Visualizador (pág. 121)
65 Indicadores de pico L y R (PEAK) (pág. 66)
66 Mando de nivel de grabación (REC LEVEL) (pág. 67)
67 Selector de nivel de grabación (REC LEVEL) (pág. 67)
68 Selector de micrófono (MIC SELECT) (pág. 68)
69 Botón de memoria cero (ZERO SET MEMORY) (pág. 72)
70 Selector de modo de audio (AUDIO MODE) (pág. 18)
71 Interruptor de altavoz (SPEAKER) (pág. 18)
72 Selector de escucha (AUDIO MONITOR) (pág. 67)
73 Interruptor de bloqueo automático (AUTO LOCK) (pág. 15)

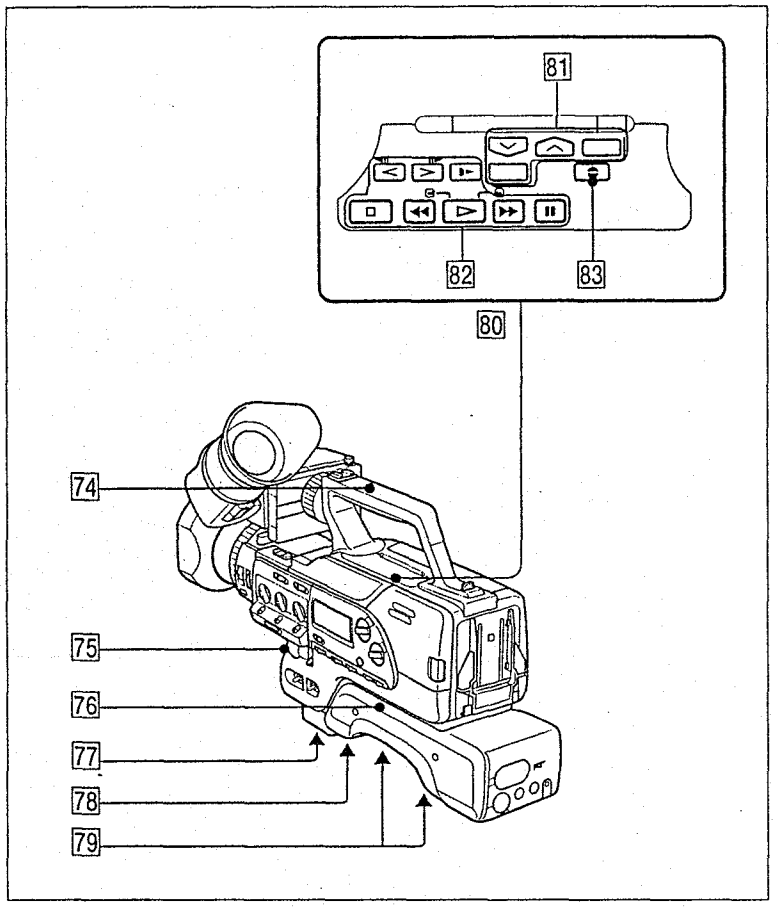

74 Carrying handle
75 IRIS dial and AUTO/MANUAL switch (p. 51)
76 Shoulder pad (p. 21)
77 Tripod receptacle (p. 22)
78 Lithium battery cover (p. 82)
79 Shoulder pad screws (p. 21)
80 Cover for menu and video control buttons
81 Menu buttons (p. 32)
MENU/ ∨ / ∧ /EXECUTE
82 Video control buttons (p. 27)
□STOP (stop)
◀◀ REW (rewind)
▷ PLAY (playback)
▶▶ FF (fast forward)
❚❚ PAUSE (pause)
❚▶ SLOW (slow speed playback)
◀❚❚/❚❚▶ FRAME (direction select/frame-by-frame)
83 AUDIO DUB ⇄ button (p. 80)

74 Asa de transporte
75 Mando del iris (IRIS) y selector de ajuste automático/manual (AUTO/MANUAL) (pág. 51)
76 Almohadilla para el hombro (pág. 21)
77 Rosca para trípode (pág. 22)
78 Cubierta de la pila de litio (pág. 82)
79 Tornillos de la almohadilla para el hombro (pág. 21)
80 Cubierta de las teclas de menú y de control de vídeo
81 Teclas de menú (pág. 32)
Menú/ ∨ / ∧ /ejecución (MENU/ ∨ / ∧ /EXECUTE)
82 Teclas de control de vídeo (pág. 27)
Parada (□STOP)
Rebobinado (◀◀ REW)
Reproducción (▷ PLAY)
Avance rápido (▶▶ FF)
Pausa (❚❚ PAUSE)
Reproducción a cámara lenta (❚▶ SLOW)
Selección de sentido/reproducción por fotogramas (◀❚❚/❚❚▶ FRAME)
83 Tecla de audiomontaje (⇄ AUDIO DUB) (pág. 80)

Remote Commander

The buttons that have the same name on the Remote Commander as on the camcorder function identically.

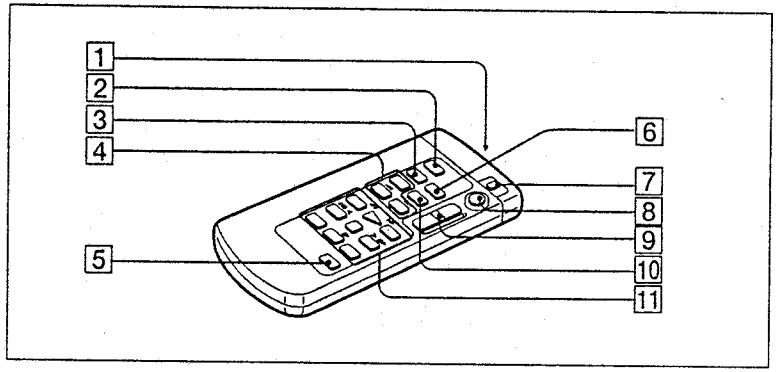

1 **Transmitter**
Point toward the remote sensor to control the digital camcorder after turning on the digital camcorder.
2 **PHOTO button** (p.40)
3 **DISPLAY button** (p. 28)
4 **SEARCH MODE/I◄◄/►►I buttons**
5 **AUDIO DUB button**
6 **ZERO SET MEMORY button**
7 **VTR4/ID/VTR2 switch** (p. 118)
Select VTR4 or ID, the same setting as COMMANDER in the menu system.
The VTR2 position does not function.
8 **START/STOP button**
9 **Zoom button**
The zooming speed is unchangeable by the Remote Commander.
10 **DATA CODE button** (p. 76)
11 **Video control buttons**

Telemando

Las teclas del telemando con el mismo nombre que las de la videocámara digital poseen idéntica función.

1 **Transmisor**
Apunte con él hacia el sensor de control remoto de la videocámara digital después de haber conectado la alimentación de la misma.
2 **Tecla de toma de fotografías (PHOTO)** (pág. 40)
3 **Tecla de visualización (DISPLAY)** (pág. 28)
4 **Teclas de modo de búsqueda (SEARCH MODE/I◄◄/►►I)**
5 **Tecla de audiomontaje (AUDIO DUB)**
6 **Tecla de memoria de cero (ZERO SET MEMORY)**
7 **Selector de modo de mando (VTR4/ID/VTR2)** (pág. 118)
Seleccione VTR4 o ID, el mismo ajuste que COMMANDER del sistema de menús.
La posición VTR2 no funcionará.
8 **Tecla de inicio/parada (START/STOP)**
9 **Tecla del zoom**
La velocidad del zoom no podrá variarse con el telemando.
10 **Tecla de código de datos (DATA CODE)** (pág. 76)
11 **Teclas de control de vídeo**

To prepare the Remote Commander

To use the Remote Commander, you must insert two R6 (size AA) batteries. Use the supplied R6 (size AA) batteries.
(1) Remove the battery cover from the Remote Commander.
(2) Insert both of the R6 (size AA) batteries with correct polarity.
(3) Put the battery cover back onto the Remote Commander.

Preparación del telemando

Para utilizar el telemando, tendrá que insertarle dos pilas R6 (tamaño AA). Utilice las pilas R6 (tamaño AA) suministradas.
(1) Quite la tapa del compartimiento de las pilas del telemando.
(2) Inserte dos pilas R6 (tamaño AA) con la polaridad correcta.
(3) Coloque la tapa del compartimiento de las pilas del telemando.

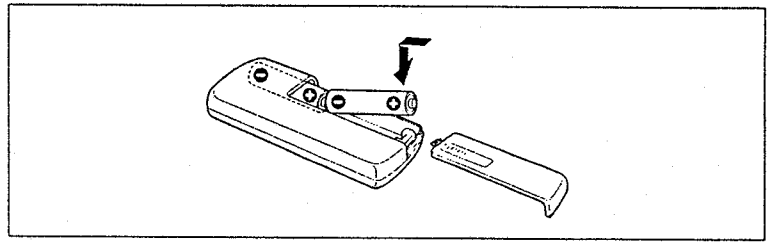

Note on battery life

The batteries for the Remote Commander last about 6 months under normal operation. When the batteries become weak or dead, the Remote Commander does not work.

To avoid damage from possible battery leakage

Remove the batteries when you will not use the Remote Commander for a long time.

To use the Remote Commander

Make sure that the COMMANDER is set to VTR4/ID in the menu system on the digital camcorder.

Nota sobre las pilas

Las pilas del telemando durarán unos 6 meses en funcionamiento normal. Cuando las pilas se debiliten o agoten, el telemando no trabajará.

Para evitar el daño que podría causar el electrólito

Cuando no vaya a utilizar el telemando durante mucho tiempo, extráigale las pilas.

Para utilizar el telemando

Cerciórese de que COMMANDER del sistema de menús de la videocámara digital esté ajustado a VTR4/ID.

About the ID of the Remote Commander

You can avoid having the digital camcorder accidentally respond to signals from other remote commanders by setting the VTR4/ID/VTR2 switch to ID. Use the supplied Remote Commander when you set the switch to ID.
When you use the Remote Commander for the first time, register the ID following the procedure below. Once you have registered the ID, you do not need to do so again.

(1) Open the cover, then press MENU to display the menu in the viewfinder.
(2) Press ∨ or ∧ to select COMMANDER, then press EXECUTE.
(3) Press ∨ or ∧ to select ID SET.
(4) Set VTR4/ID on the Remote Commander to ID.
(5) Point the Remote Commander at the digital camcorder and press □ on the Remote Commander.
After the beep sound, the ID of the Remote Commander is registered, and the COMMANDER is set to ID in the menu system.
(6) Press MENU to erase the menu display.

Sobre el código de identificación (ID) del telemando

Usted podrá evitar que la videocámara digital responda accidentalmente a las señales de otros telemandos poniendo el selector VTR4/ID/VTR2 en ID. Utilice el telemando suministrado después de haber puesto el selector en ID.
Cuando utilice el telemando por primera vez, registre el ID realizando el procedimiento siguiente. Después de haber registrado el ID, no necesitará volver a hacerlo.

(1) Abra la cubierta y presione MENU para hacer que se visualice el menú en el visor.
(2) Presione ∨ o ∧ para seleccionar COMMANDER, y después presione EXECUTE.
(3) Presione ∨ o ∧ para seleccionar ID SET.
(4) Ponga VTR4/ID del telemando en ID.
(5) Apunte con el telemando hacia la videocámara digital y presione □ del telemando.
Después de un pitido, se registrará el ID del telemando, y COMMANDER se ajustará a ID en el sistema de menús.
(6) Presione MENU para borrar la visualización del menú.

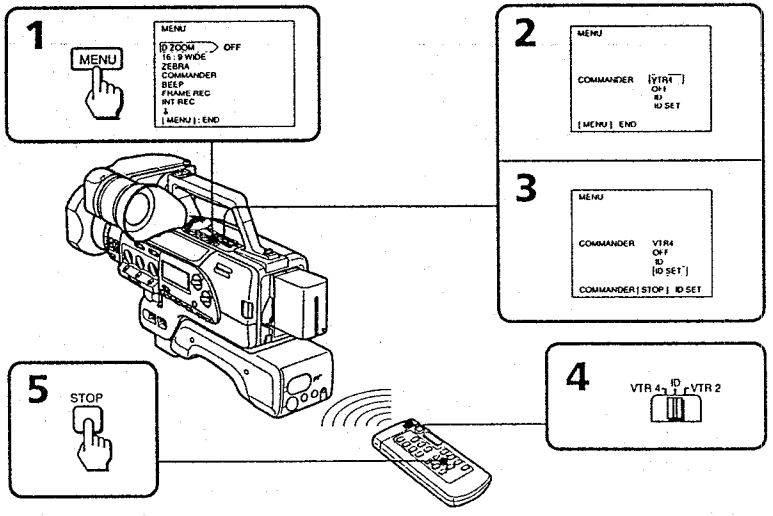

Remote control direction

Aim the Remote Commander at either of the two remote commander sensors.
The range of the Remote Commander is about 5m indoors. Use the Remote Commander as close to flat as possible, otherwise it may not work.

Dirección de control remoto

Apunte con el telemando hacia cualquiera de los dos sensores de control remoto de la videocámara digital.
El alcance del telemando es de unos 5 m en interiores. Utilice el telemando lo más cerca posible, ya que de lo contrario podría no trabajar.

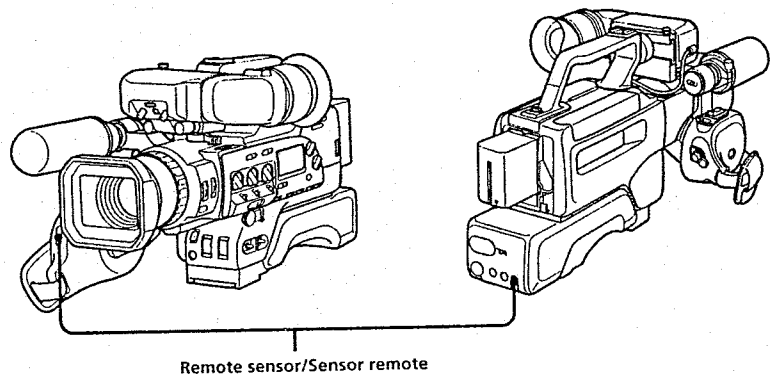

Notes on the Remote Commander

- Keep the remote sensor away from strong light sources such as direct sunlight or illumination. Otherwise, the remote control may not be effective.
- Be sure that there is no obstacle between the remote sensor on the digital camcorder and the Remote Commander.
- This digital camcorder works in commander mode VTR 4 or ID. The commander modes (VTR 4 and ID) are used to distinguish this digital camcorder from other Sony VCRs. If you use another Sony VCR at commander mode ID, we recommend that you change the commander mode or cover the remote sensor of the VCR with black paper.
- You do not need to store the ID again, after having done so once. Set COMMANDER to ID in the menu system, and set the VTR4/ID/VTR2 switch on the Remote Commander to ID.
- The stored ID is not erased even if you replace the lithium battery.

Notas sobre el telemando

- Mantenga el sensor de control remoto alejado de fuentes de luz intensa, como la luz solar directa o aparatos de iluminación. De lo contrario, el control remoto podría no funcionar.
- Cerciórese de que no haya obstáculos entre el sensor de control remoto de la videocámara digital y el telemando.
- Esta videocámara digital trabaja en el modo de mando VTR4 o ID. Los modos de mando (VTR4 e ID) se utilizan para distinguir esta videocámara digital de otras videograbadoras Sony. Si utiliza otra videograbadora Sony con modo de mando ID, le recomendamos que cambie el modo de mando o que cubra el sensor de control remoto de la videograbadora con papel negro.
- Después de haber almacenado el ID, no necesitará volver a hacerlo. Ajuste COMMANDER a ID en el sistema de menús, y ponga el selector VTR4/ID/VTR2 del telemando en ID.
- El ID almacenado no se borrará aunque reemplace la pila de litio.

In the viewfinder

En el visor

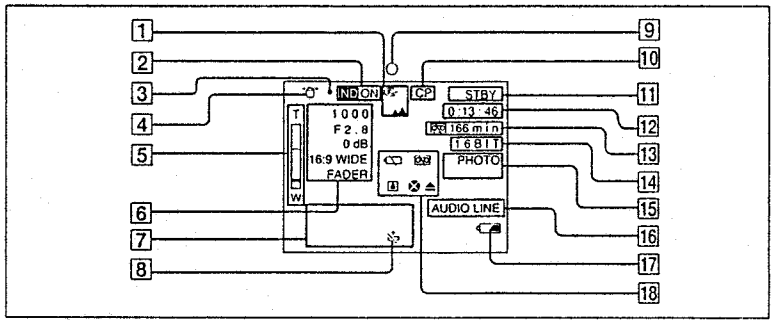

1 **Manual focusing indicator** (p. 50)
appears when focusing far, appears when focusing close.
2 **ND filter indicator** (p. 64)
3 **White balance indicator** (p. 62)
4 **Steady shot indicator** (p. 69)
5 **Zoom indicator** (p. 19, 49)
6 **Manual setting data/ wide mode/ fader or overlap indicators** (p. 39, 36, 37)
If not set, the indicator disappears, and all indicators below rise 1 row.
7 **Data code indicators** (p. 76)
8 **Lithium battery indicator** (p. 81)
9 **Recording/battery indicator** (p. 87)
10 **Custom preset indicator** (p. 70)
11 **Video control mode** (p. 15)
12 **Time code**
13 **Remaining tape indicator**
14 **Audio mode indicator** (p. 18)
15 **INTERVAL/ FRAME REC/ PHOTO/ ZERO SET MEMORY/ C MEMORY/ date search/Photo search indicator** (p. 41, 44, 40, 72, 74)
16 **AUDIO LINE indicator** (p. 79)
When AUDIO INPUT SELECT is set to LINE, this indicator appears
17 **Remaining battery indicator** (p. 87)

18 **Warning indicators** (p. 122)

1 **Indicador de enfoque manual** (pág. 50)
aparecerá cuando enfoque a lo lejos, y aparecerá cuando enfoque un motivo cercano.
2 **Indicador de filtro ND** (pág. 64)
3 **Indicador de equilibrio del blanco** (pág. 62)
4 **Indicador de videofilmación estable** (pág. 69)
5 **Indicador del zoom** (pág. 19, 49)
6 **Indicadores de datos de ajuste manual/ modo de pantalla amplia/aumento gradual y desvanecimiento, o superposición** (pág. 39, 36, 37)
Si no ha realizado un ajuste, su indicador no aparecerá, y el resto de los indicadores subirá una fila.
7 **Indicadores de código de datos** (pág. 76)
8 **Indicador de la pila de litio** (pág. 81)
9 **Indicador de videofilmación/batería** (pág. 87)
10 **Indicador de ajustes personales** (pág. 70)
11 **Modo de control de vídeo** (pág. 15)
12 **Código de tiempo**
13 **Indicador de cinta restante**
14 **Indicador de modo de audio** (pág. 18)
15 **Indicador de grabación a intervalos/por fotogramas/de fotografía/memoria de cero/memoria de cassette/búsqueda de fecha/búsqueda de fotografía (INTERVAL/ FRAME REC/PHOTO/ZERO SET MEMORY/C MEMORY)** (pág. 41, 44, 40, 72, 74)
16 **Indicador de entrada audio de línea (AUDIO LINE)** (pág. 79)
Este indicador aparecerá cuando haya ajustado AUDIO INPUT SELECT a LINE.
17 **Indicador de batería restante** (pág. 87)

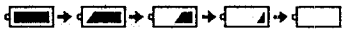

18 **Indicadores de advertencia** (pág. 122)

In the display window

En el visualizador

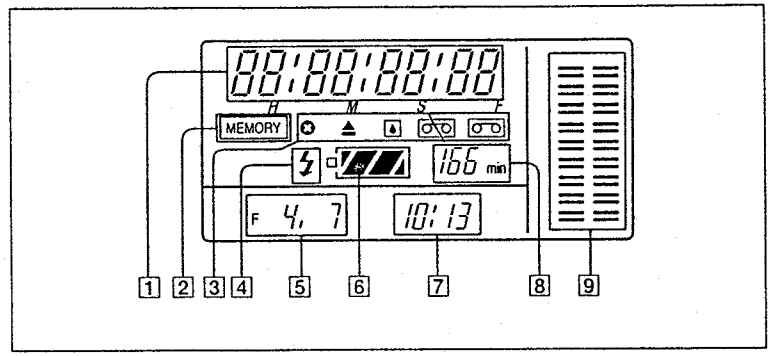

1 **Time code**
2 **MEMORY indicator** (p. 72)
Same as ZERO SET MEMORY indicator in the viewfinder.
3 **Warning indicators** (p. 122)
4 **Flash indicator**
5 **Date/aperture indicator** (p.76, 51)
6 **Remaining battery indicator** (p. 87)
7 **Time indicator**
8 **Remaining tape indicators**
9 **Audio level indicators** (p. 66)

1 **Código de tiempo**
2 **Indicador de memoria (MEMORY)** (pág. 72)
Igual que el indicador ZERO SET MEMORY del visor.
3 **Indicadores de advertencia** (pág. 122)
4 **Indicador de flash**
5 **Indicador de fecha/apertura** (pág. 76, 51)
6 **Indicador de batería restante** (pág. 87)
7 **Indicador de hora**
8 **Indicadores de cinta restante**
9 **Indicadores de nivel de audio** (pág. 66)

Attaching the shoulder strap

Attach the supplied shoulder strap to the hooks for the shoulder strap .

Colocación de la bandolera

Fije la bandolera suministrada en los ganchos para la misma.

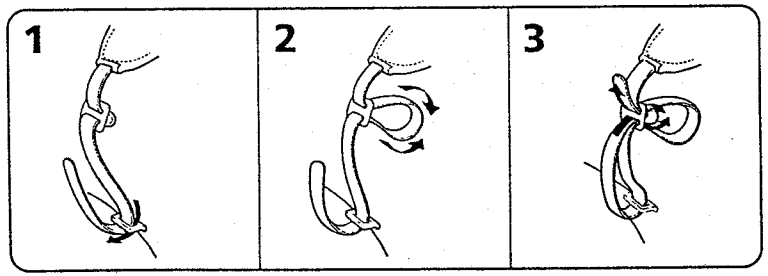

Warning indicators

If indicators flash in the viewfinder, or a caution lamp on the digital camcorder flashes, check the following:
♪: you can hear the beep sound when the BEEP is set to ON.

Indicadores de advertencia

Si parpadea un indicador en el visor, o parpadea una lámpara de advertencia de la videocámara digital, compruebe lo siguiente:
♪: Si BEEP está ajustado a ON, oirá pitidos.

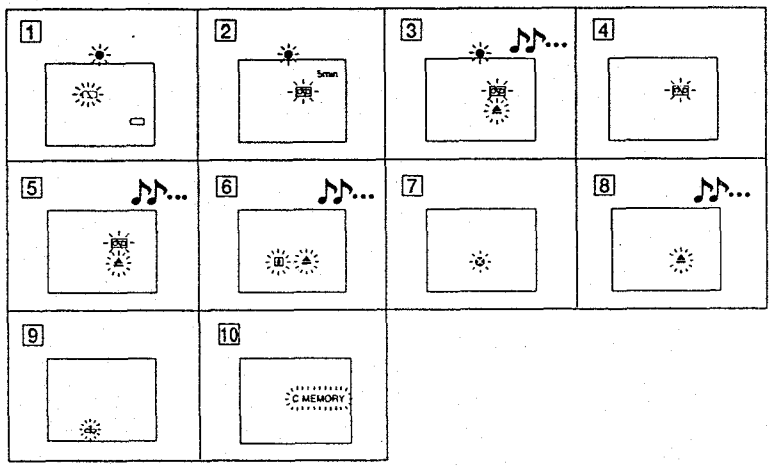

1 **The battery is weak or dead.**
Slow flashing: The battery is weak.
Fast flashing: The battery is dead.
2 **The tape is near the end.**
The flashing is slow.
3 **The tape has run out.**
The flashing becomes rapid.
4 **No tape has been inserted.**
5 **The tab on the tape is out (red).**
6 **Moisture condensation has occurred.**
7 **The video heads may be contaminated.**
This indicator appears only in the viewfinder.
8 **Some other trouble has occurred.**
Disconnect the power source and contact your Sony dealer or local authorized facility.
9 **The lithium battery is weak or is not installed.**
10 **Updating the cassette memory data. Wait until C MEMORY disappears.**
The cassette compartment automatically lifts up and opens after the indicator disappears.

1 **La batería está débil o agotada**
Parpadeo lento: La batería está débil.
Parpadeo rápido: La batería está agotada.
2 **La cinta está a punto de finalizar.**
El parpadeo es lento.
3 **La cinta ha finalizado.**
El parpadeo es rápido.
4 **No hay videocassette insertado.**
5 **La lengüeta del videocassette esta deslizada hacia afuera (rojo).**
6 **Se ha producido condensación de humedad.**
7 **Las cabezas de vídeo pueden estar contaminadas.**
Este indicador solamente aparecerá en el visor.
8 **Se ha producido algún problema.**
Desconecte la fuente de alimentación y póngase en contacto con su proveedor Sony o con un centro de reparaciones autorizado por Sony.
9 **La pila de litio está débil o no está instalada.**
10 **Actualizando los datos de la memoria de cassette. Espere hasta que desaparezca C MEMORY.**
El compartimiento del videocassette se levantará automáticamente y se abrirá después de que haya desaparecido el indicador.

SECTION 2
DISASSEMBLY

• PRECAUTIONS ON REPAIR

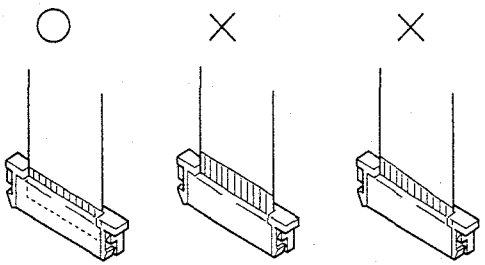

If plated solder foil pattern at the tip of a board is peeled off, cut and remove it.
(Take care that plated debris are not left in the connector.)

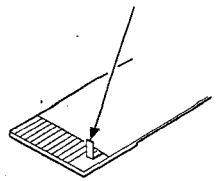

Note : Confirm that the terminal ends of the flat cable and flexible board are not broken or folded. Also be careful that connections to the connectors are firmly done as deep as they can go without slanting.

NOTE : Follow the disassembly procedure in the numerical order given.

2-1. REMOVAL OF EVF BLOCK

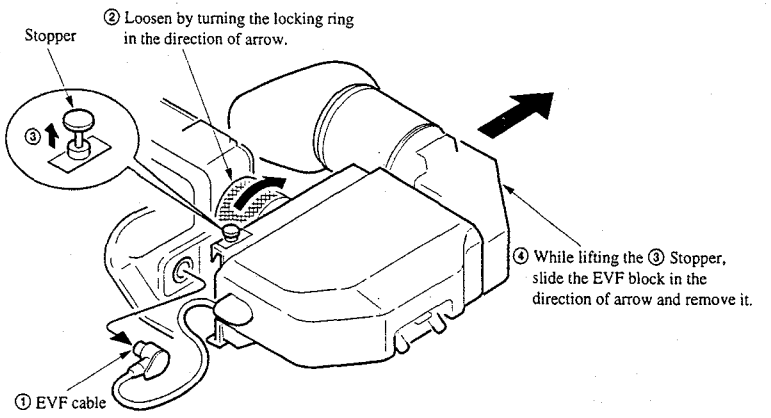

2-2. REMOVAL OF EVF CABINET

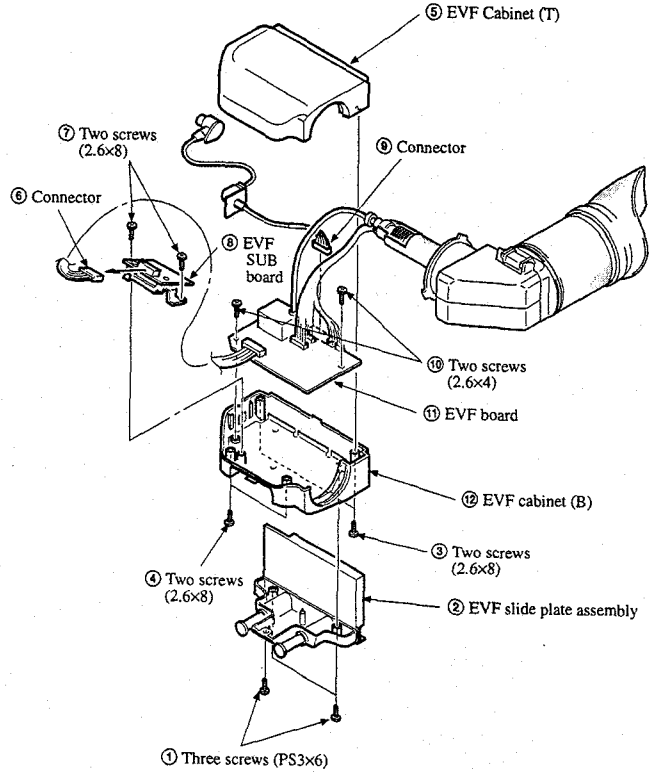

2-3. REMOVAL OF CRT BLOCK

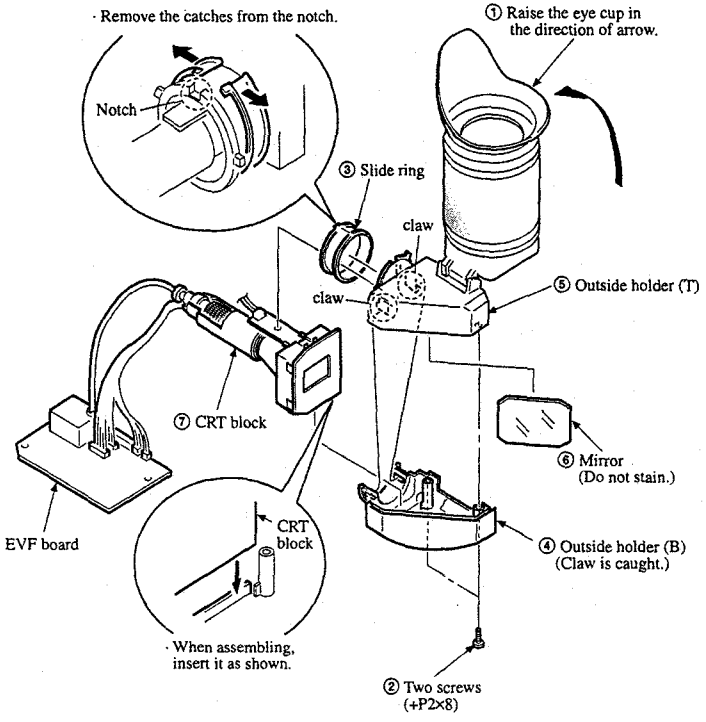

2-4. REMOVAL OF VF-105 BOARD

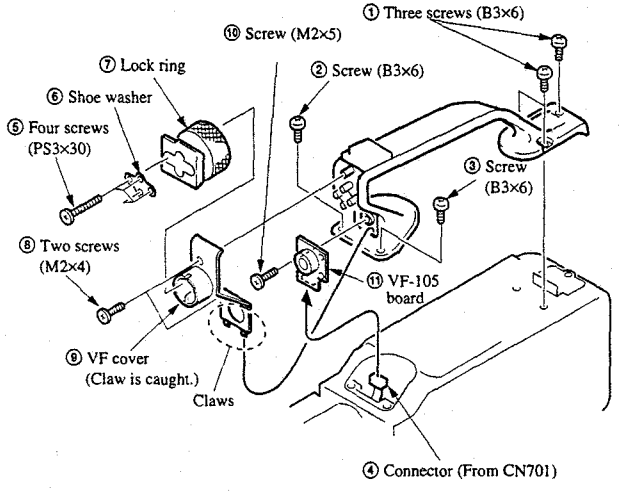

2-5. REMOVAL OF EM-10 BOARD

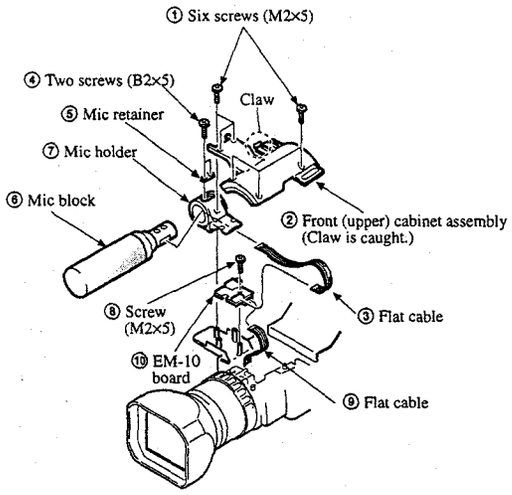

2-6. REMOVAL OF PAD TERMINAL (1)

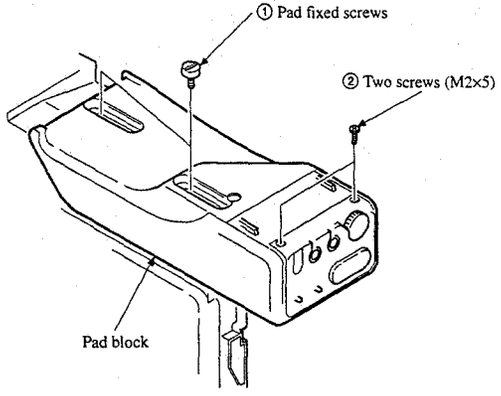

2-7. REMOVAL OF PAD TERMINAL (2)

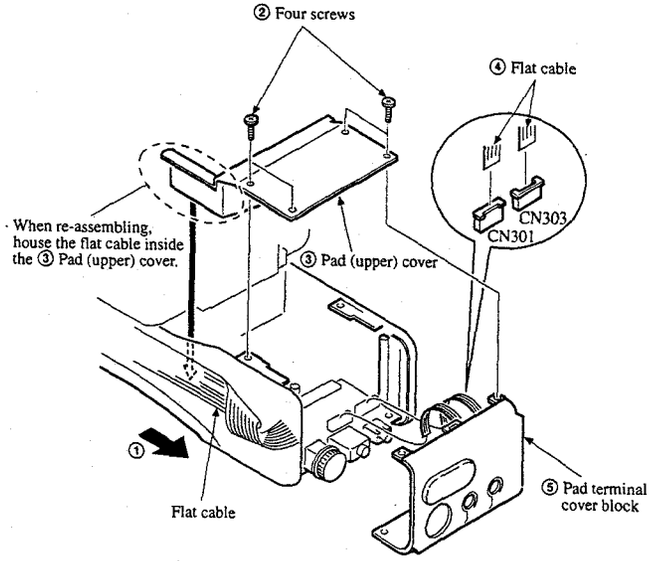

2-8. REMOVAL OF SJ-15, RT-21, BOARD AND PAD TERMINAL (3)

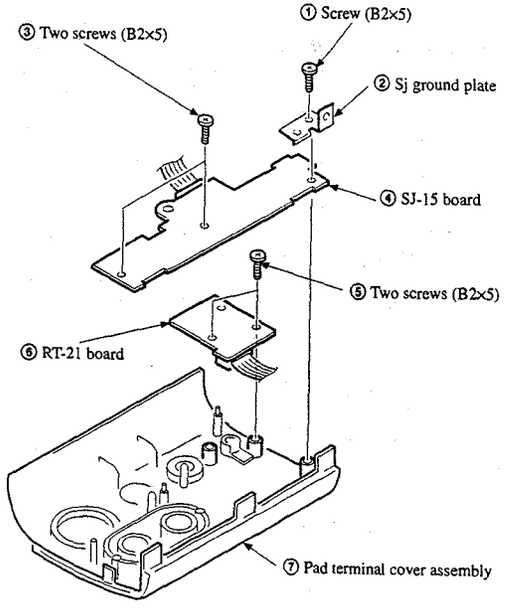

2-9. REMOVAL OF LH-10 BOARD

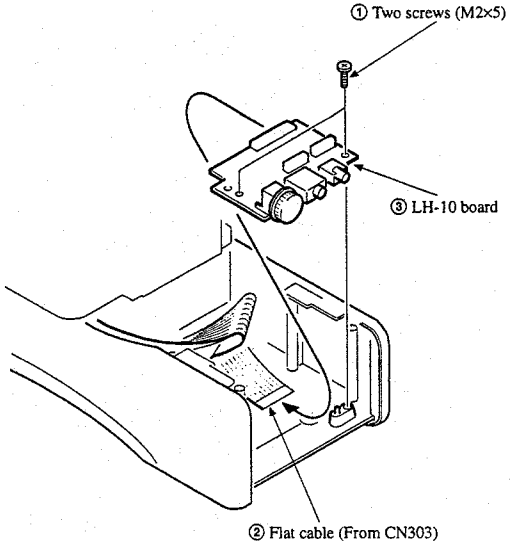

2-10. REMOVAL OF PAD FRAME

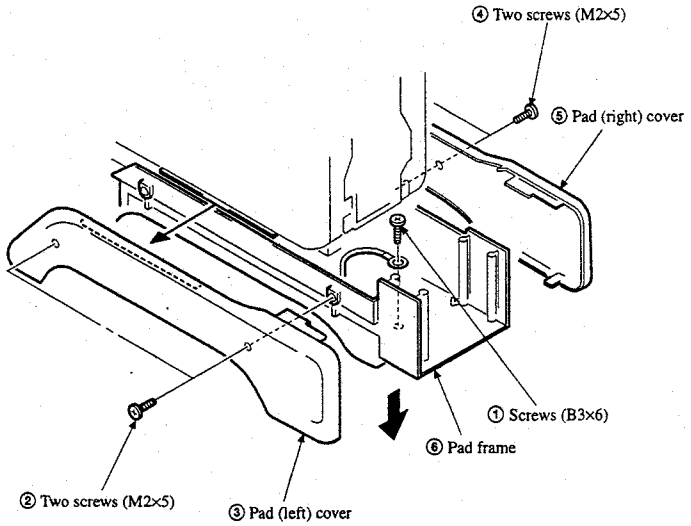

2-11. REMOVAL OF CABINET (R) BLOCK

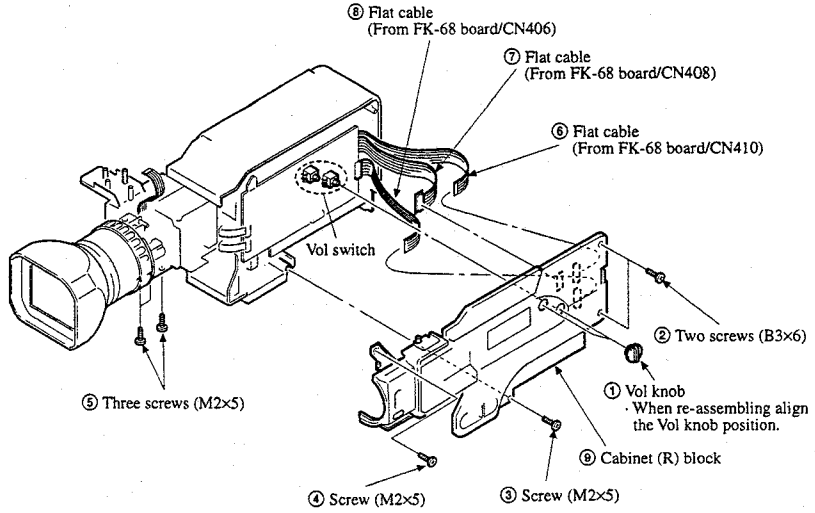

2-12. REMOVAL OF SW-286 AND ED-44 BOARDS

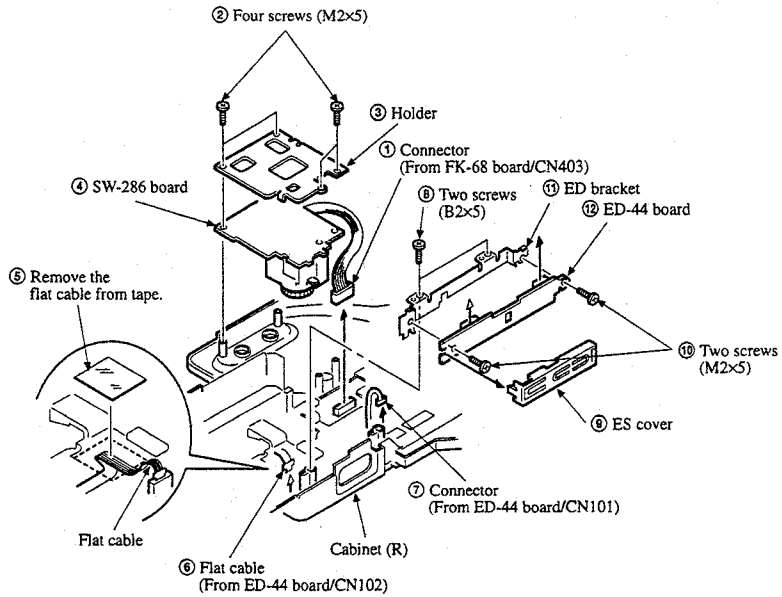

2-13. REMOVAL OF CONTROL PANEL ASSEMBLY (1)

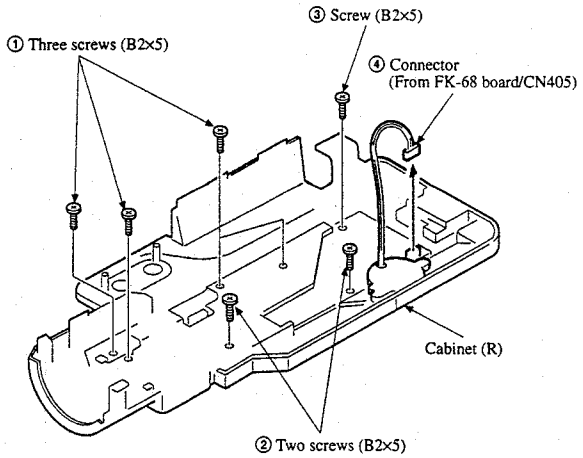

2-14. REMOVAL OF CONTROL PANEL ASSEMBLY (2)

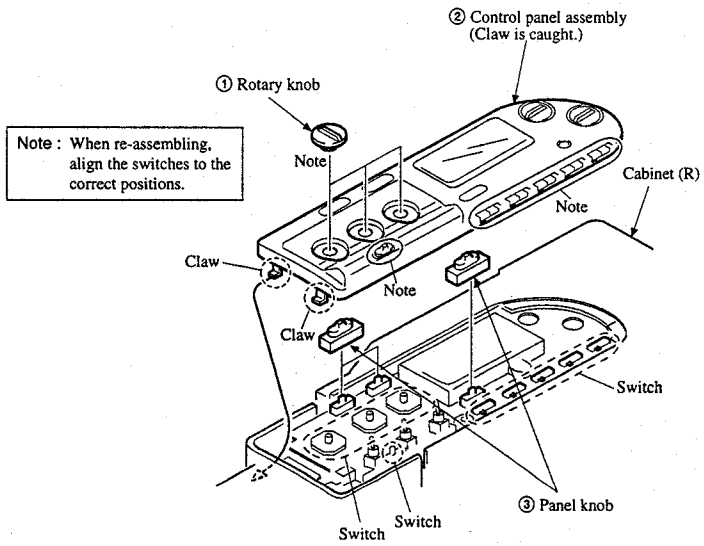

2-15. REMOVAL OF AM-38 AND FK-68 BOARDS

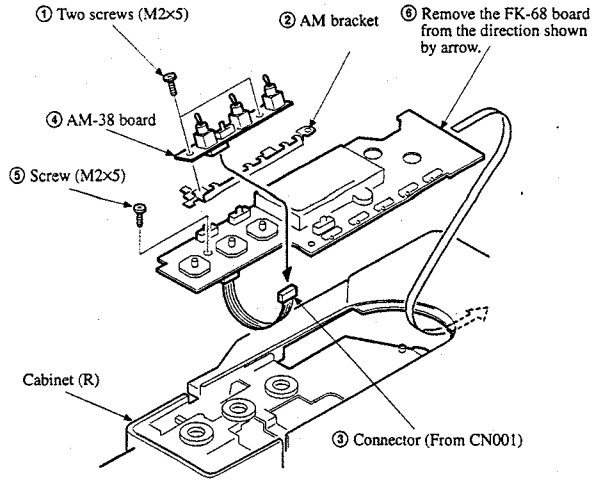

2-16. REMOVAL OF MECHANISM BLOCK (1)

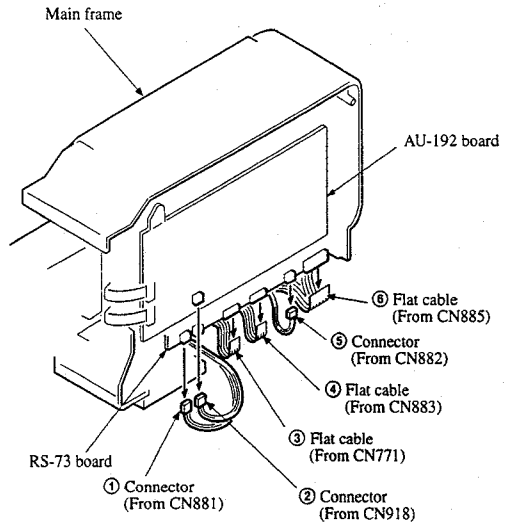

2-17. REMOVAL OF MECHANISM BLOCK (2)

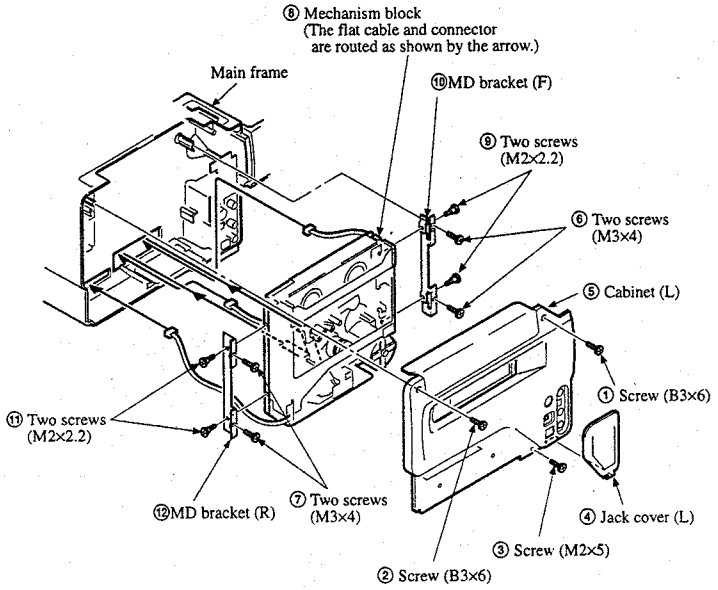

2-18. REMOVAL OF VK-41P BOARD

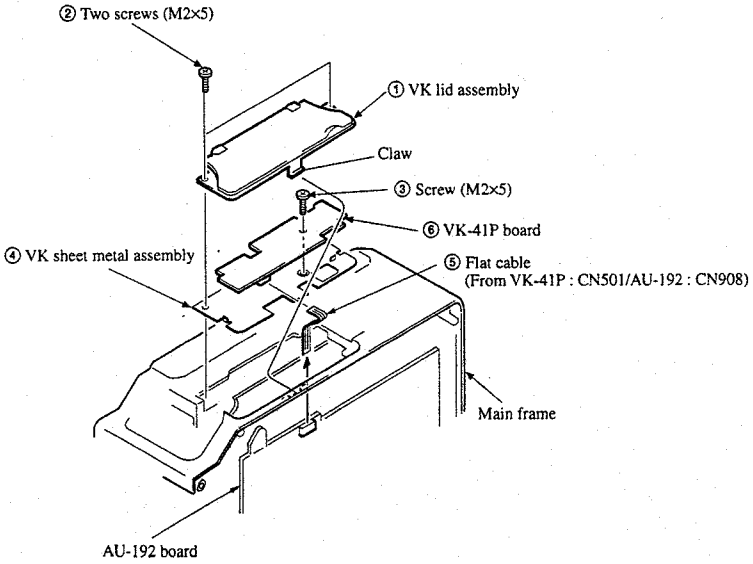

2-19. REMOVAL OF LENS BLOCK

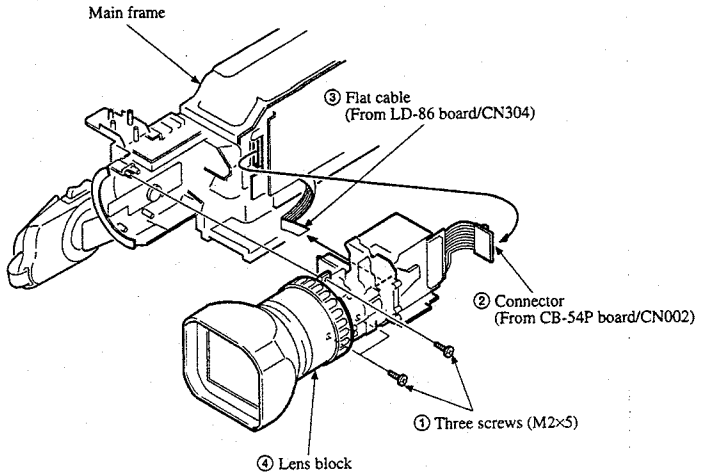

2-20. REMOVAL OF LD-86, CD-160 AND SE-56 BOARDS

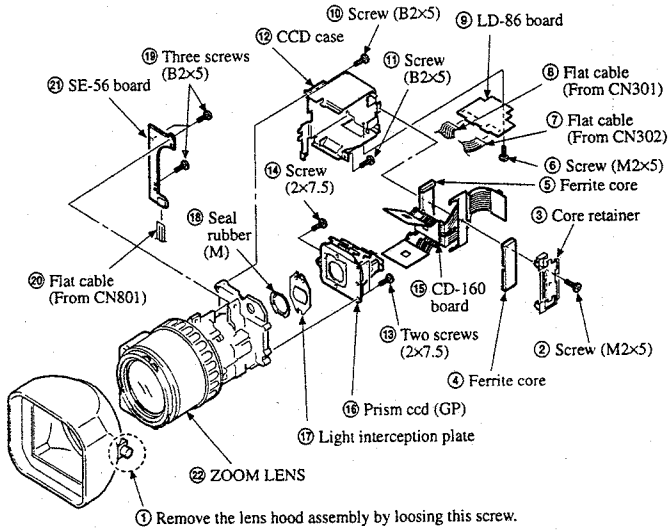

2-21. REMOVAL OF ZOOM LENS ASSEMBLY

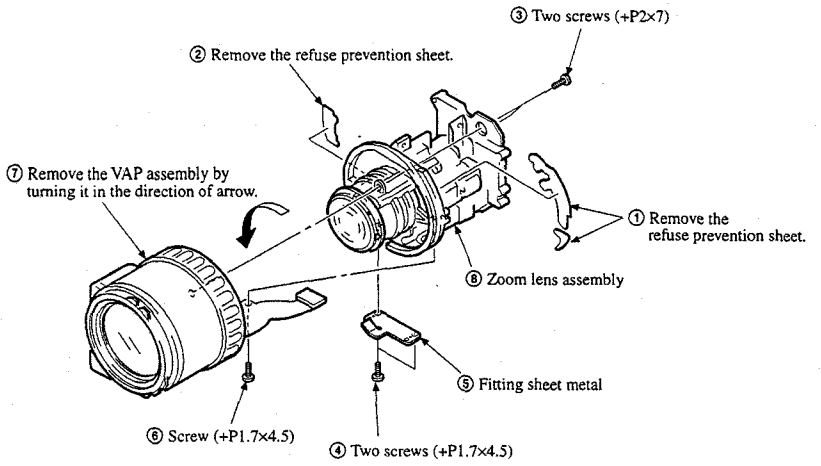

2-22. REMOVAL OF FS-78 BOARD

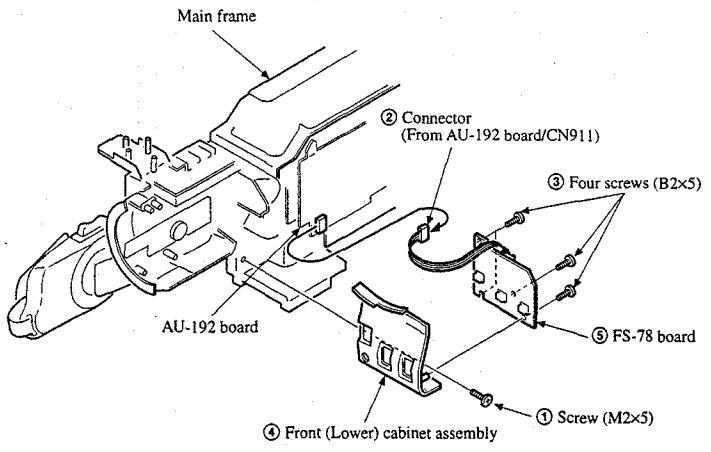

2-23. REMOVAL OF MA-280 AND GP-14 BOARDS

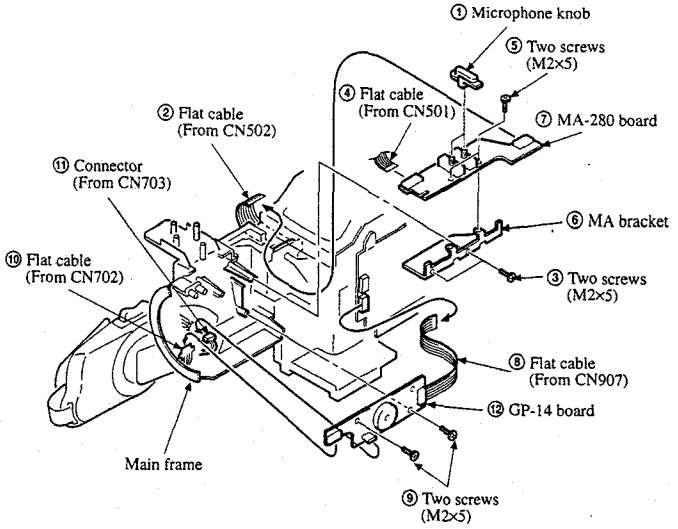

2-24. REMOVAL OF AU-192 BOARD

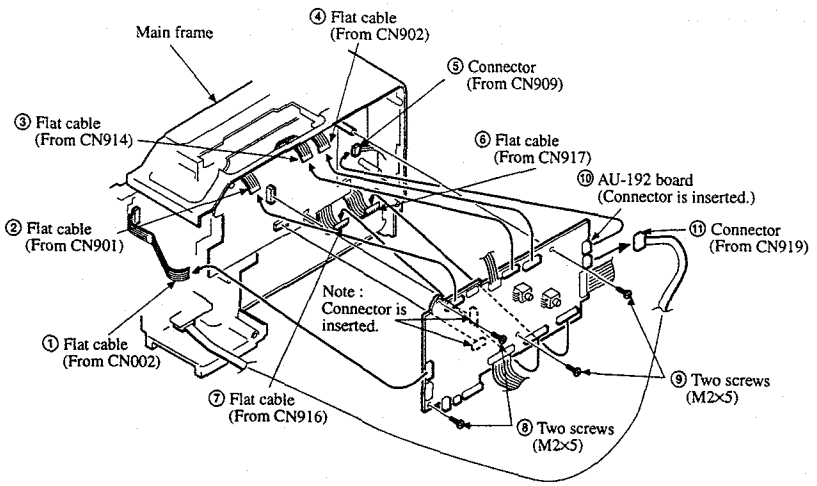

2-25. REMOVAL OF JC-15P BOARD

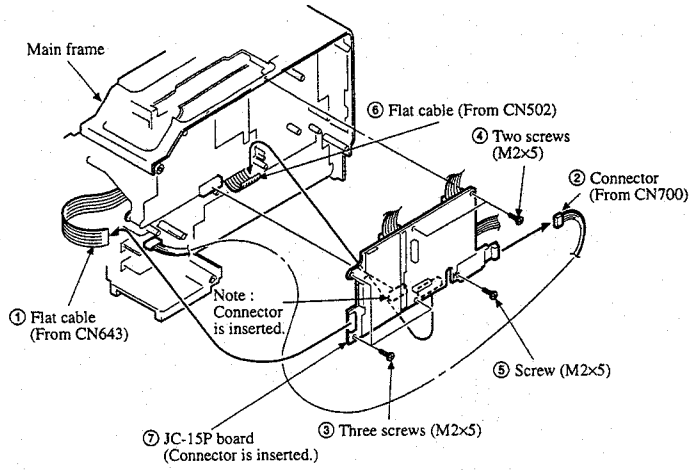

2-26. REMOVAL OF RS-73 BOARD

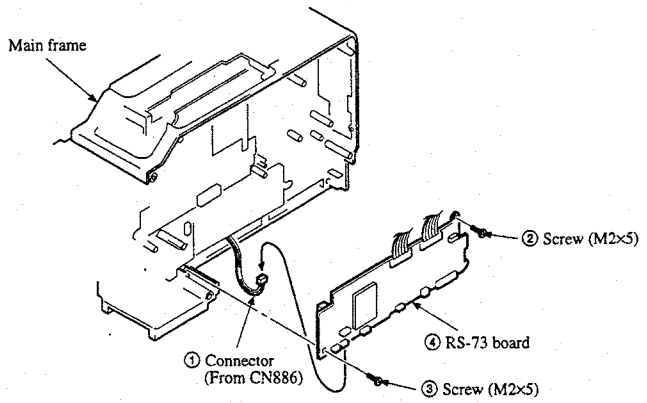

2-27. REMOVAL OF MG-16, CB-54P AND DD-75P BOARDS

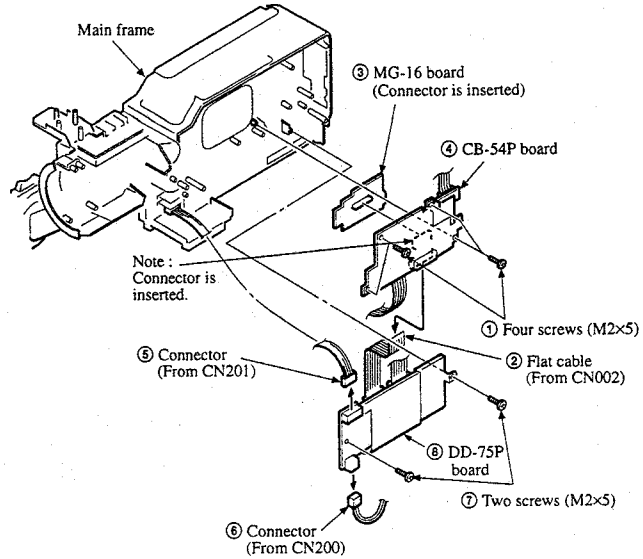

2-28. REMOVAL OF EJ-27, LI-60, JK-149, DV-27 AND DS-74 BOARDS

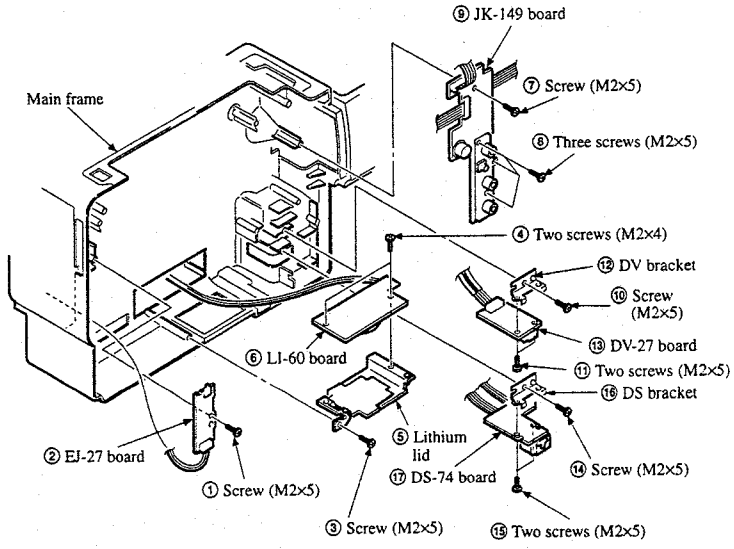

2-29. REMOVAL OF GRIP ASSEMBLY

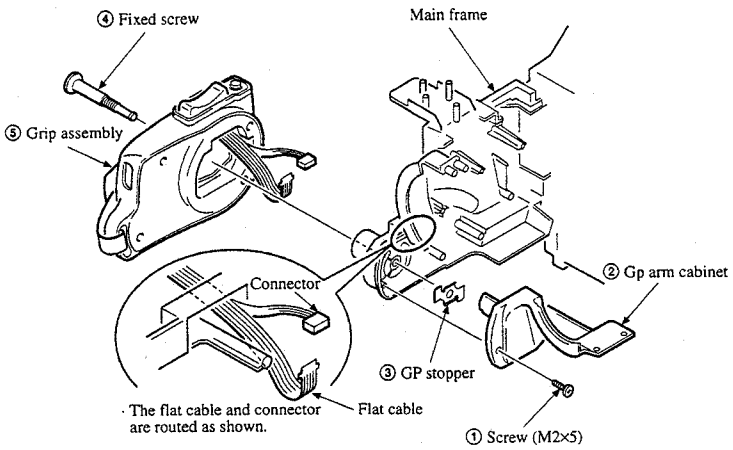

2-30. REMOVAL OF CONTROL (ZK4520) SWITCH BLOCK

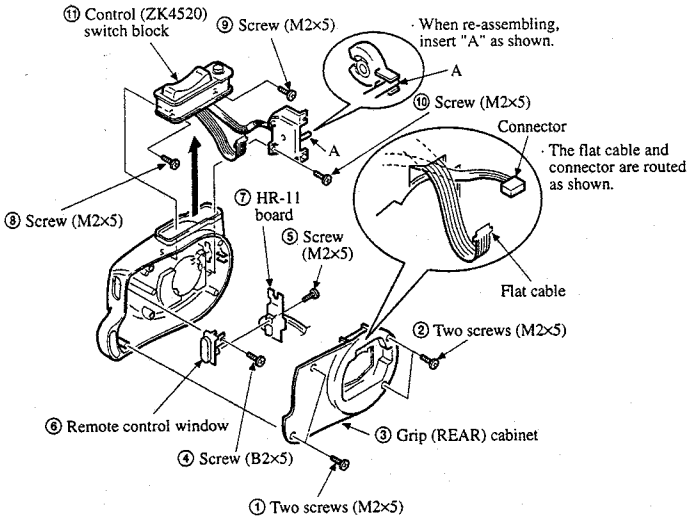

2-31. INTERNAL VIEWS

• MECHANISM BLOCK

—Front view—

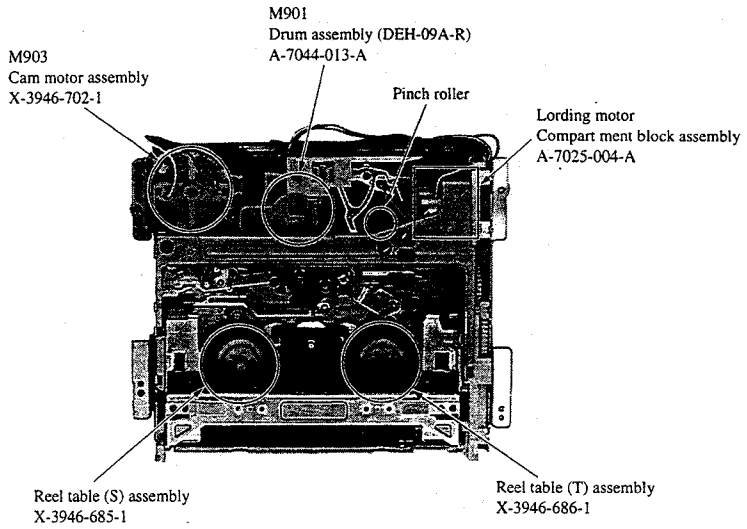

—Bottom view—

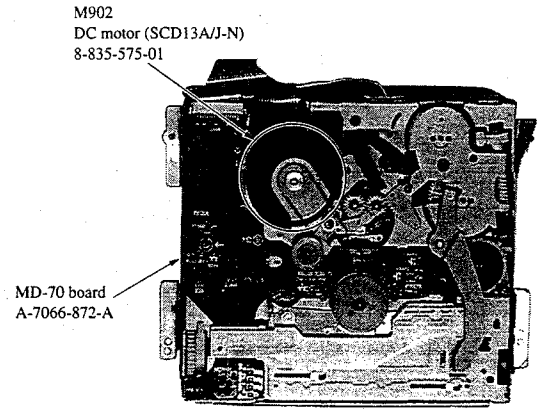

•ZOOM LENS BLOCK

—Left side—

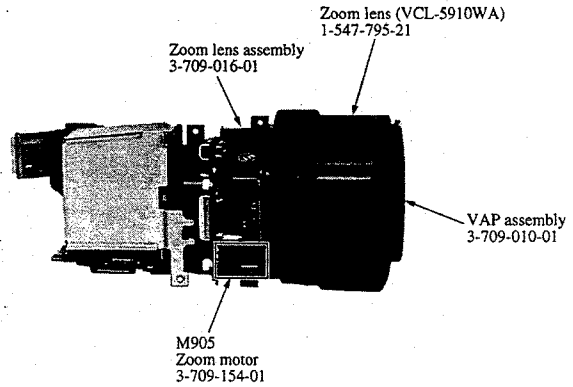

—Right side—

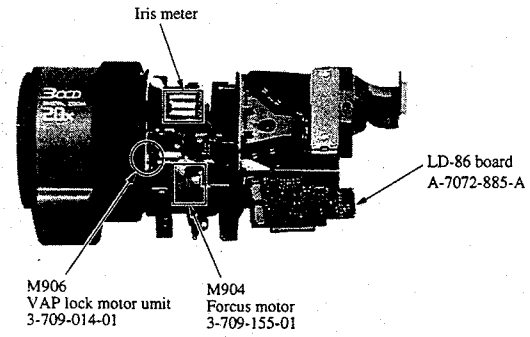

2-32. CIRCUIT BOARDS LOCATION

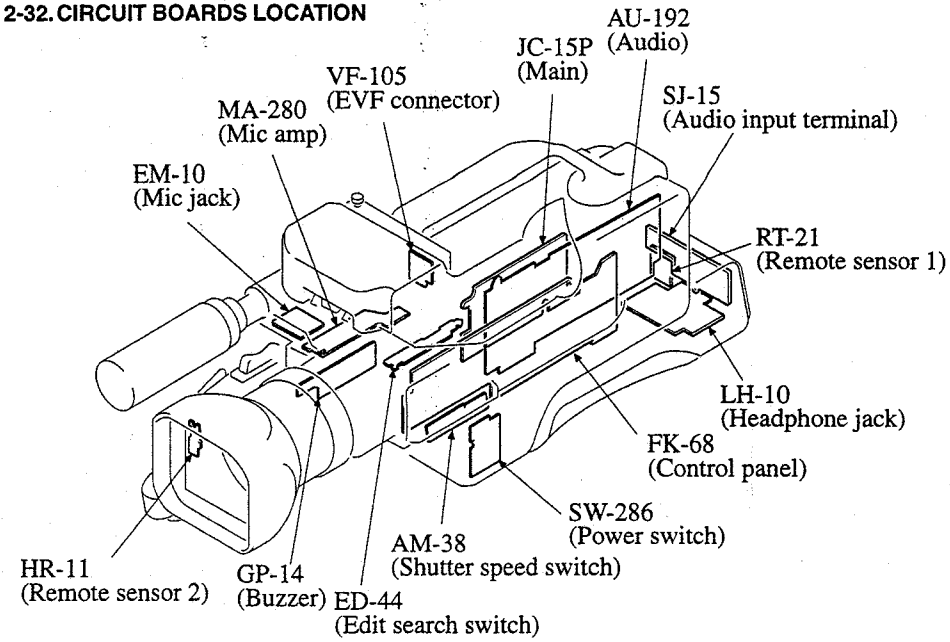

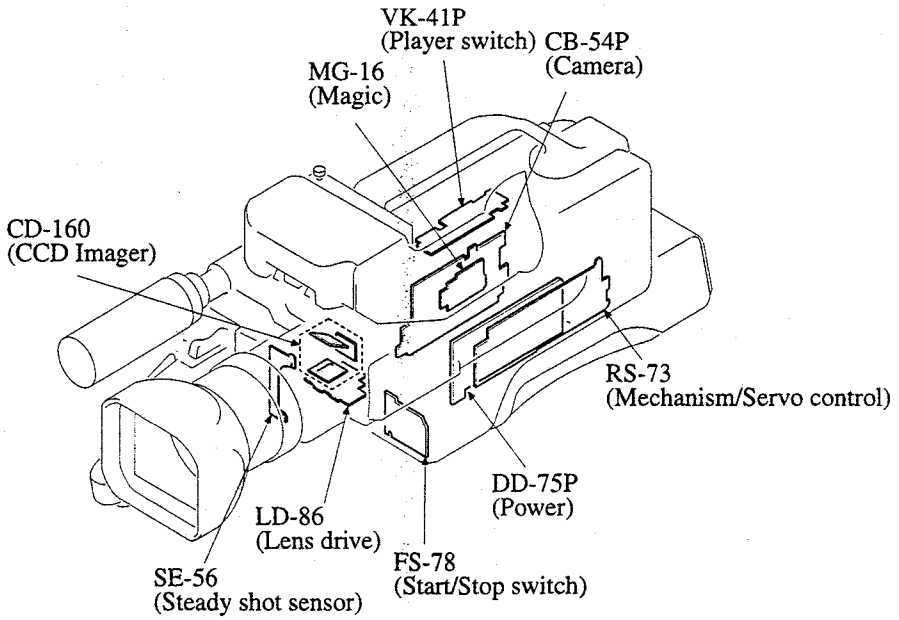

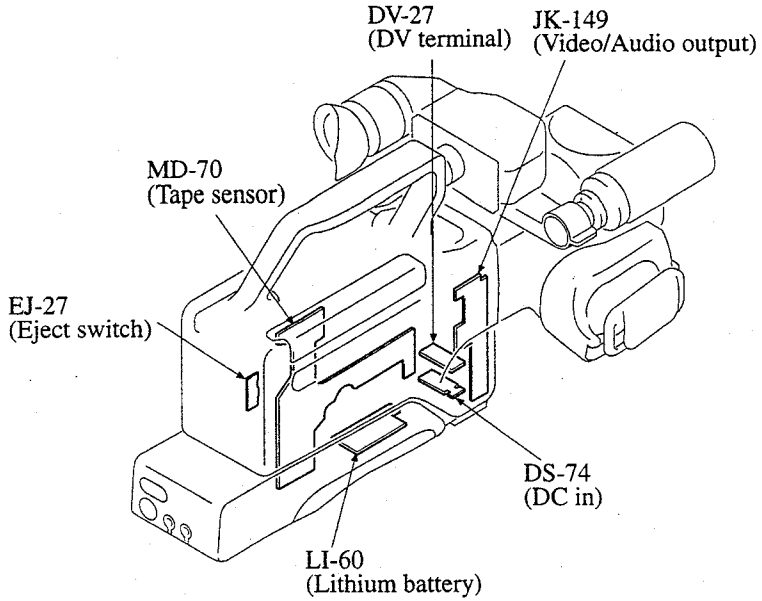
DV-27
(DV terminal)
JK-149
(Video/Audio output)
MD-70
(Tape sensor)
EJ-27
(Eject switch)
DS-74
(DC in)
LI-60
(Lithium battery)

SECTION 3
BLOCK DIAGRAMS

3-1. OVERALL BLOCK DIAGRAM (1)

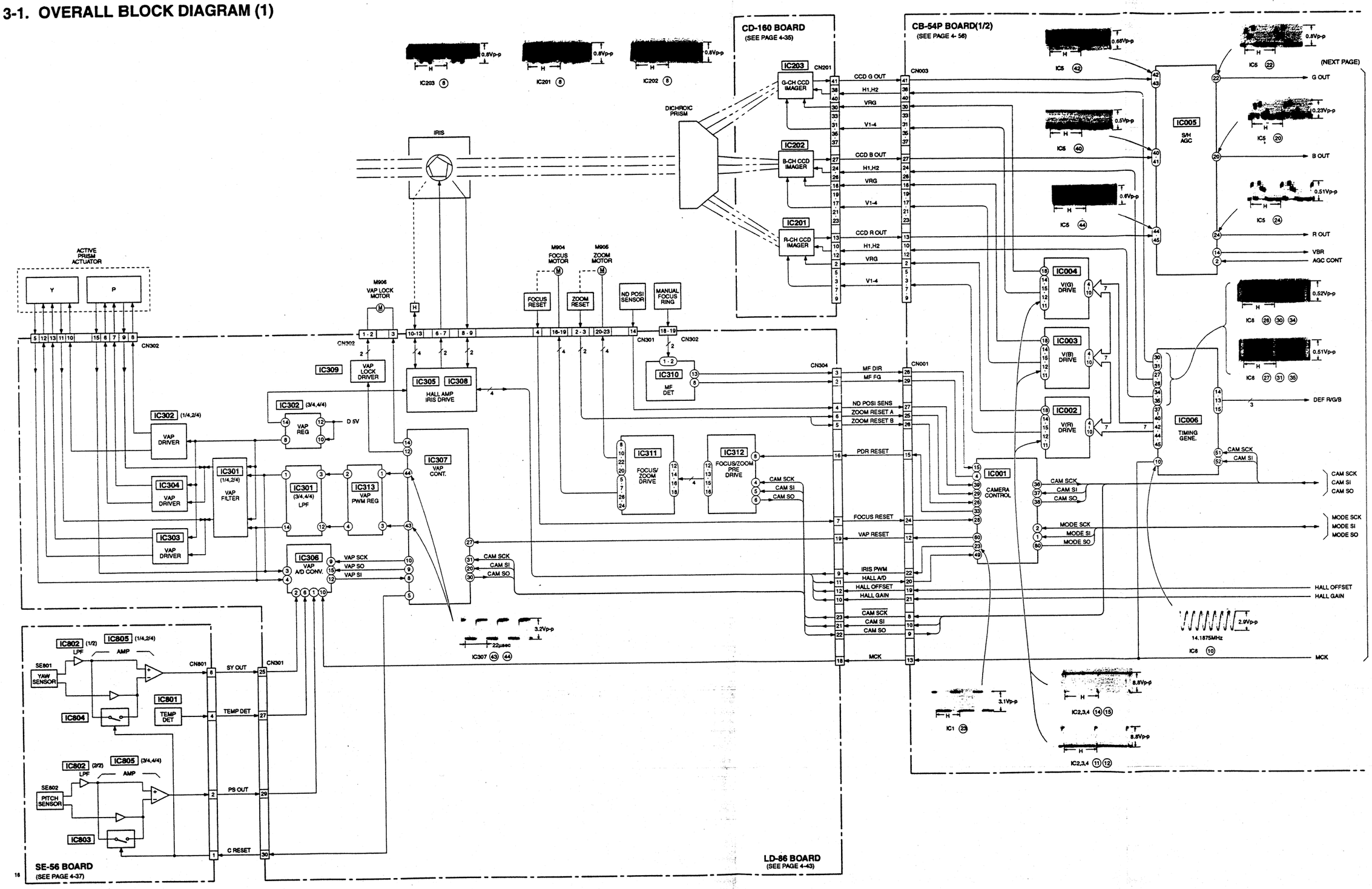

3-2. OVERALL BLOCK DIAGRAM (2)

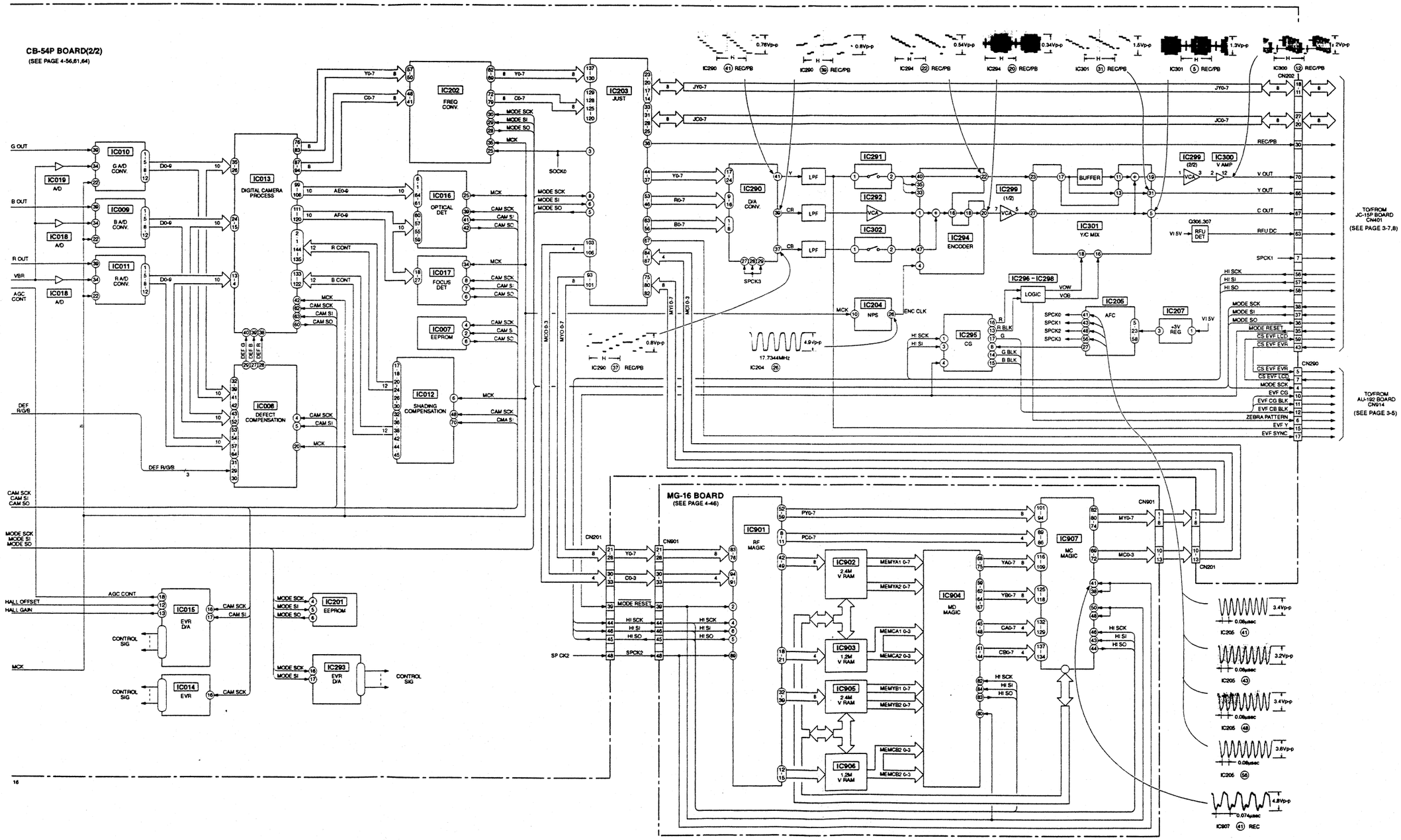

3-3. OVERALL BLOCK DAIGRAM (3)

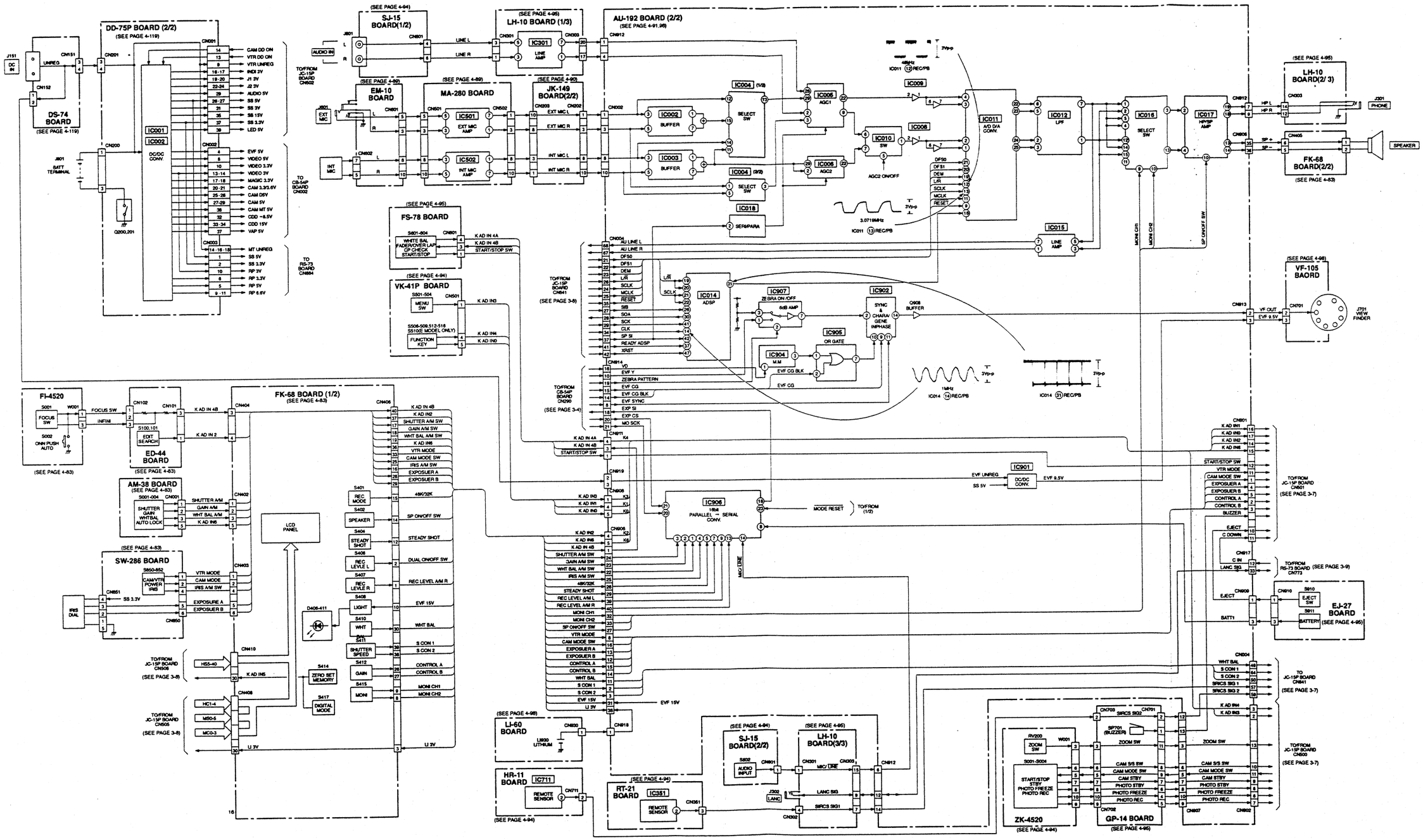

3-4. OVERALL BLOCK DIAGRAM (4)

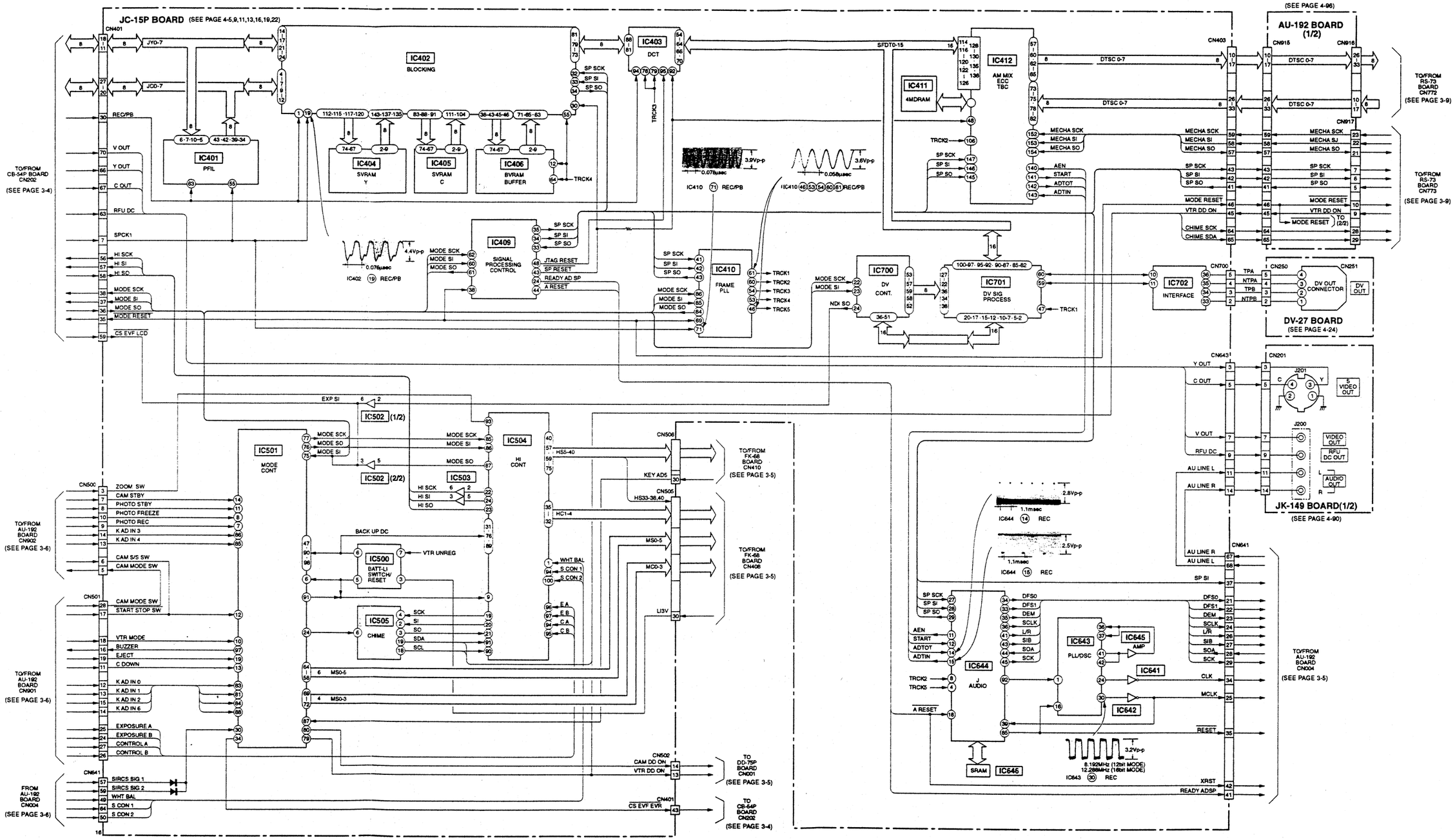

3-5. OVERALL BLOCK DIAGRAM (5)

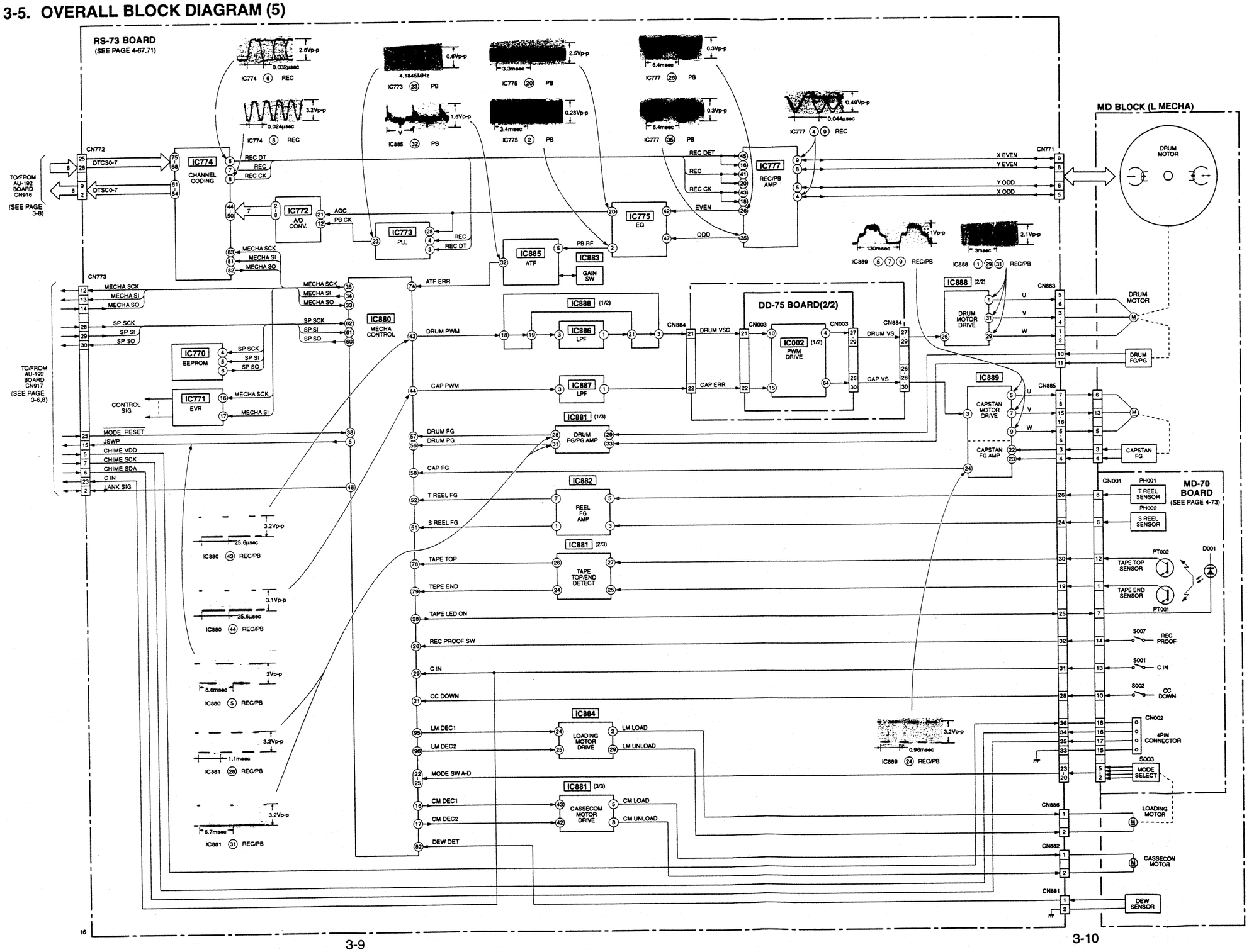

3-9 3-10

3-6. POWER BLOCK DIAGRAM (1)

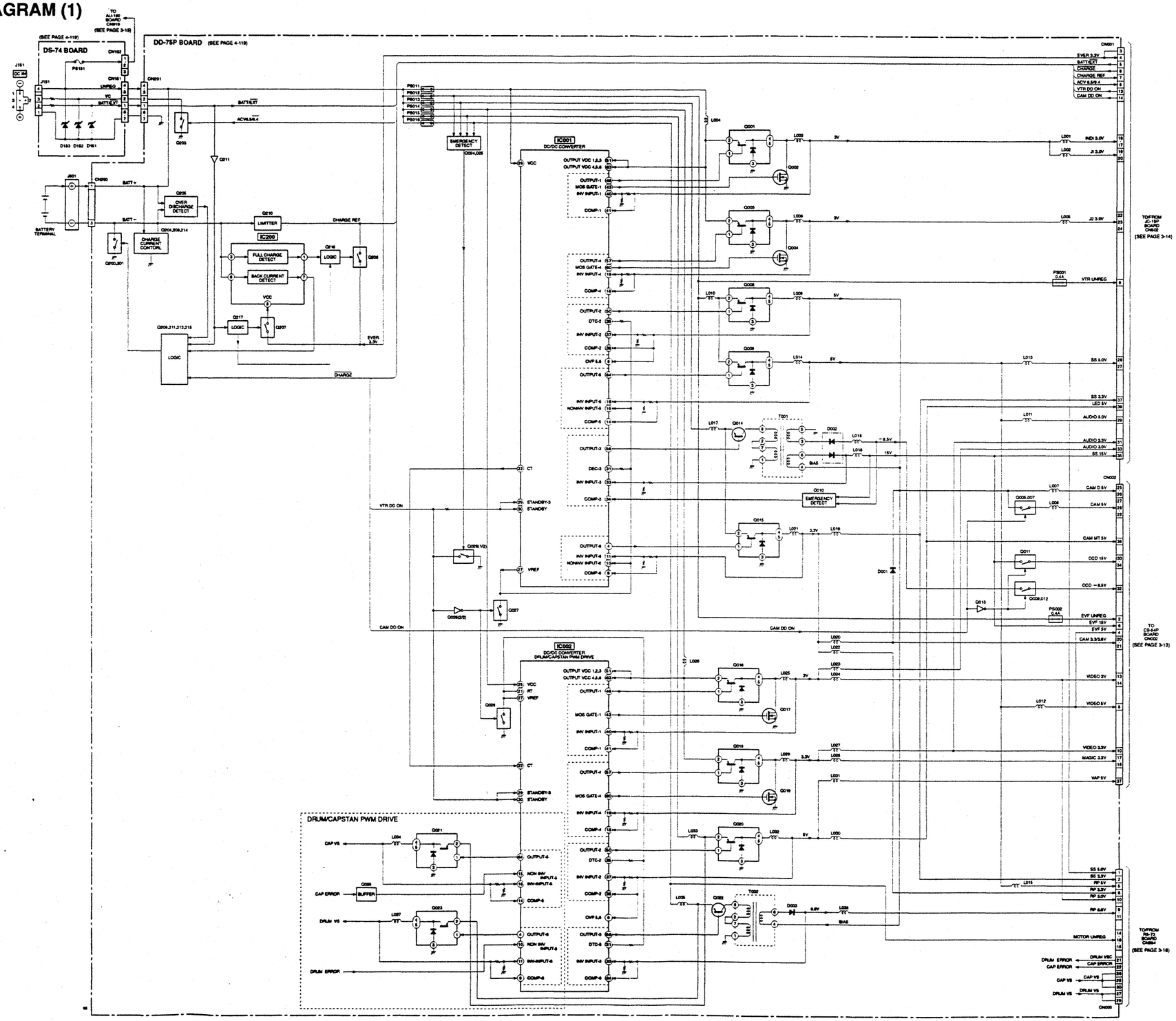

3-7. POWER BLOCK DIAGRAM (2)

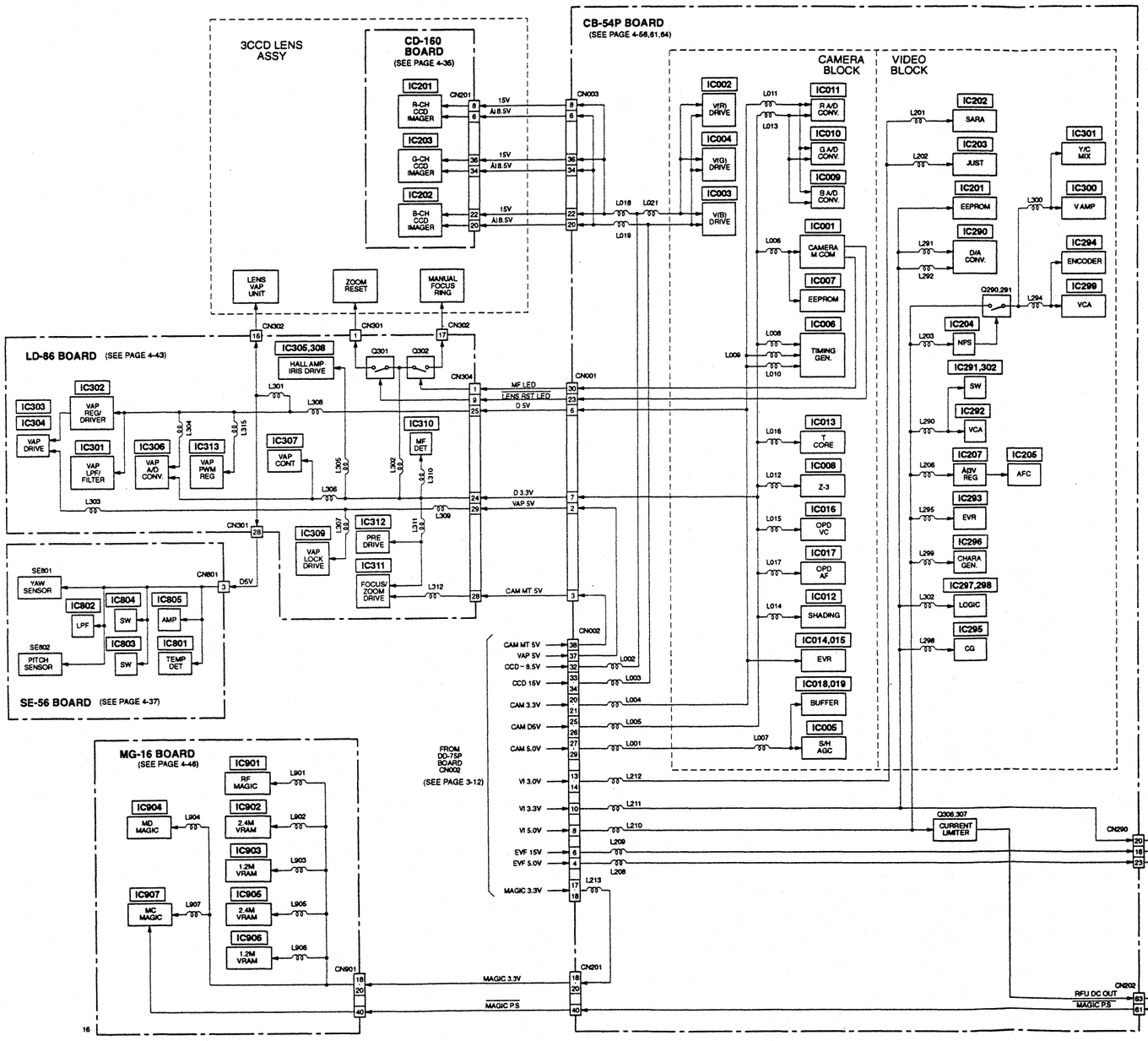

3-8. POWER BLOCK DIAGRAM (3)

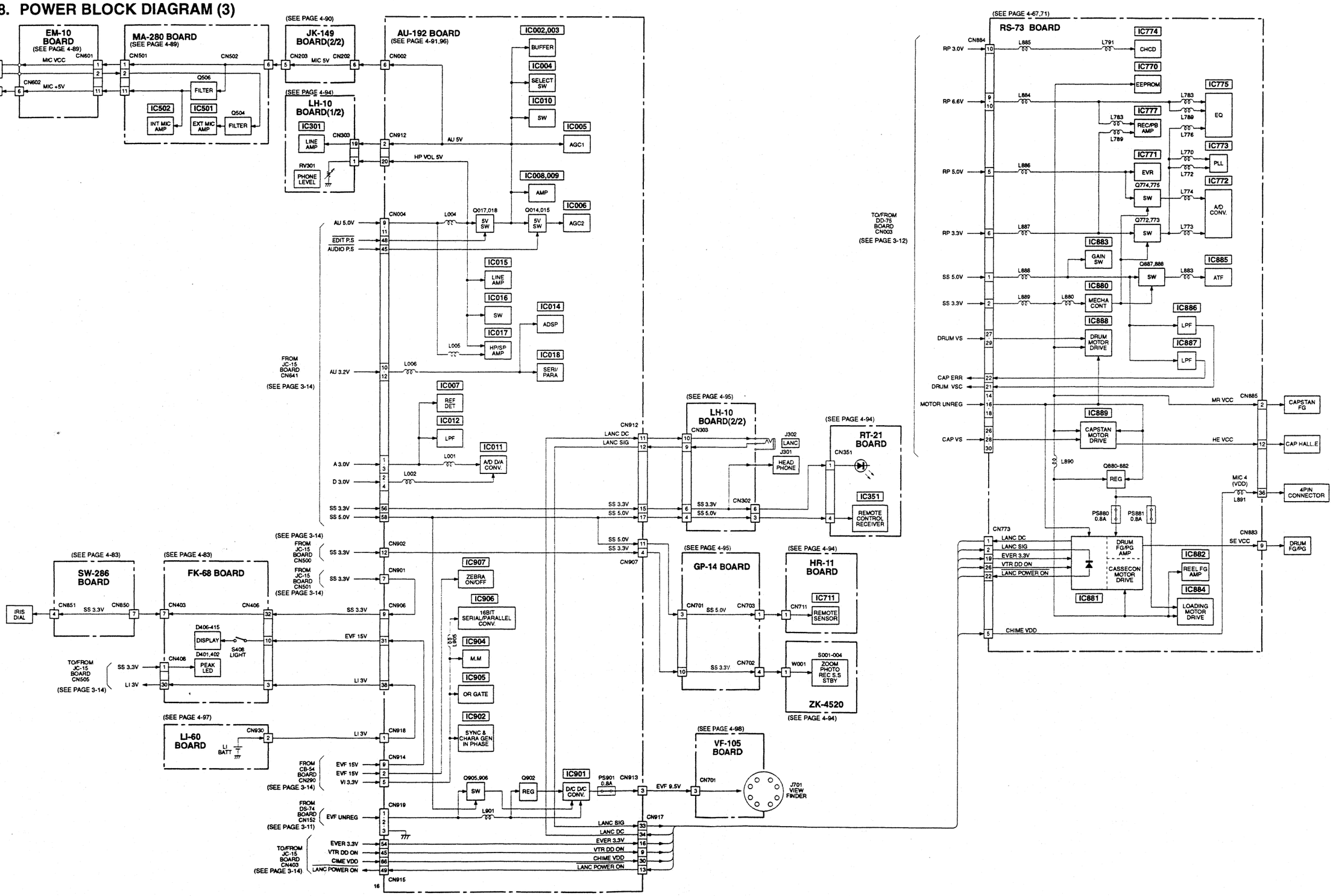

THIS NOTE IS COMMON FOR PRINTED WIRING BOARDS AND SCHEMATIC DIAGRAMS.
(In addition to this, the necessary note is printed in each block.)

- **For printed wiring boards.**
- ▬▬ : Pattern from the side which enables seeing. (The other layers' patterns are not indicated.)
- ● : Through hole is omitted.
- Printed wiring board which has four layers structure but inner two layers' patterns are omitted.

Caution :
SIDE A : The pattern face side which is seen when the upper case is opened.
SIDE B : The opposite pattern face side to the pattern seen when the upper case is opened.

- Chip parts (transistor)

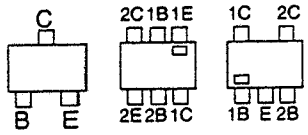

C: Collector
B: Base
E: Emitter

- **For schematic diagrams.**
- Caution when replacing chip parts. New parts must be attached after removal of chip. Be careful not to heat the minus side of tantalum capacitor, because it is damaged by the heat.
- All resistor are in ohms, 1/4W unless otherwise noted. Chip resistor are 1/10W unless otherwise noted. kΩ: 1000Ω, MΩ, : 1000kΩ.
- All capacitors are in μF unless otherwise noted. pF : μμF. 50V or less are not indicated except for electrolytics and tantalums.
- All variable and adjustable resistors have characteristic curve B, unless otherwise noted.
- : nonflammable resistor.
- : fusible resistor.
- : panel designation.
- △ : internal component.
- : adjustment for repair. *
- ▬▬ : B+Line. *
- ▬▬ : B+Line. *
- : IN/OUT direction of (+,–) B LINE. *
- Circled numbers refer to waveforms. *
- Signal name
  XEDIT → $\overline{\text{EDIT}}$ PB/XREC → PB/$\overline{\text{REC}}$

Note : The components identified by mark ⚠ or dotted line with mark ⚠ are critical for safety. Replace only with part number specified.

- Voltages and waveforms are measured between the measurement points and ground when camera shoots color bar chart of pattern box. They are reference values * and reference waveforms. (VOM of DC 10 MΩ input impedance is used.).
- Voltage values change depending upon input impedance of VOM used.)

1. Connection

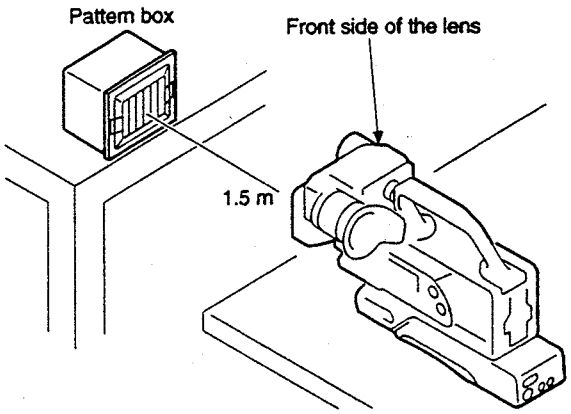

2. Adjust the distance so that the output waveform of Fig. a and the Fig. b can be obtain.

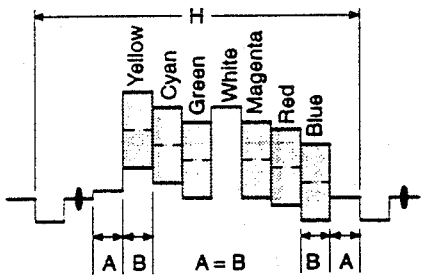

Fig.a (Video output terminal output waveform)

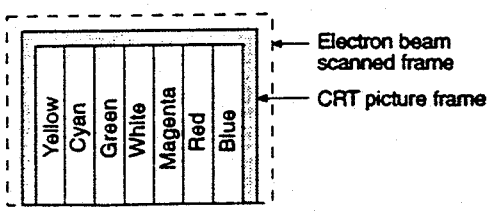

Fig.b (Picture on monitor TV)

When indicating parts by reference number, pleas include the board name.

- * : indicated by the color red.

SECTION 4
PRINTED WIRING BOARDS AND SCHEMATIC DIAGRAMS

-1. FRAME SCHEMATIC DIAGRAM

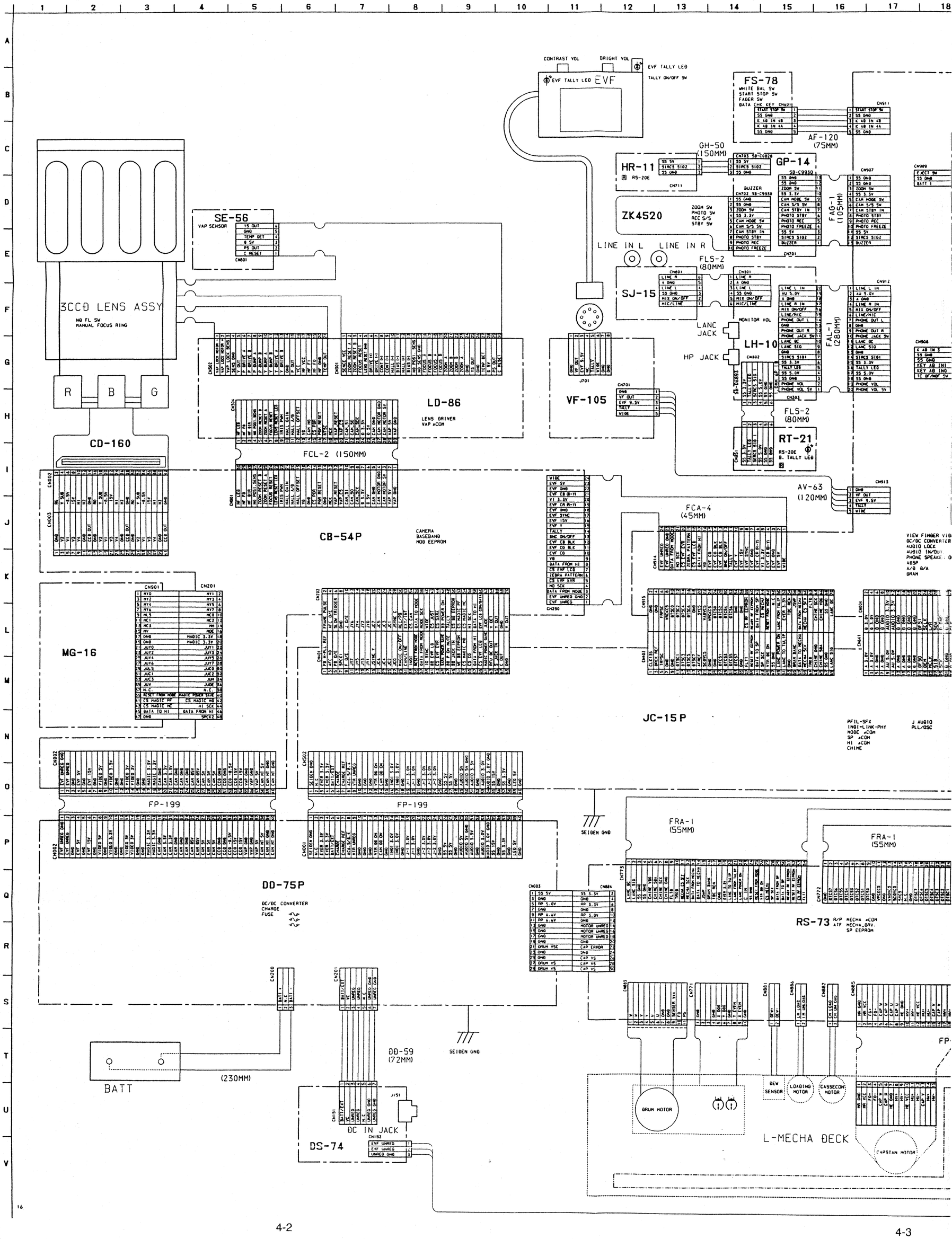

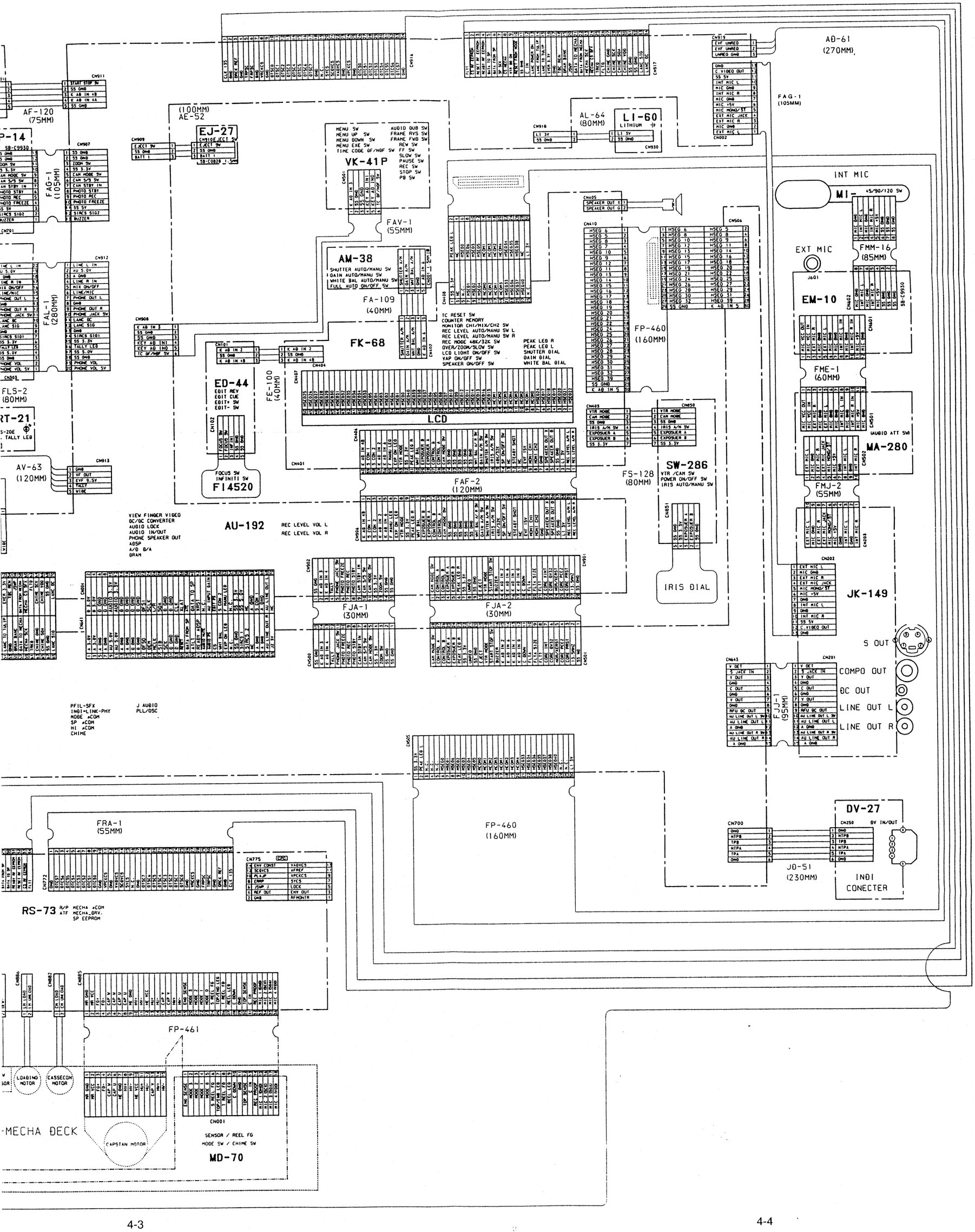
AF-120
(75MM)
FAG-1
(105MM)
FAL-1
(280MM)
FLS-2
(80MM)
AV-63
(120MM)
(100MM)
AE-52
EJ-27
VK-41P
FAV-1
(55MM)
AM-38
FA-109
(40MM)
FK-68
ED-44
FE-100
(40MM)
LCD
FAF-2
(120MM)
F14520
AU-192
VIEW FINDER VIDEO
DC/DC CONVERTER
AUDIO LOCK
AUDIO IN/OUT
PHONE SPEAKER OUT
ADSP
A/D B/A
DRAM
REC LEVEL VOL L
REC LEVEL VOL R
AL-64
(80MM)
LI-60
LITHIUM
AD-61
(270MM)
FAG-1
(105MM)
INT MIC
MI
EXT MIC
FMM-16
(85MM)
EM-10
FME-1
(60MM)
MA-280
FMJ-2
(55MM)
JK-149
FP-460
(160MM)
FS-128
(80MM)
SW-286
VTR /CAM SW
IRIS AUTO/MANU SW
IRIS DIAL
FJA-1
(30MM)
FJA-2
(30MM)
FJJ-1
(95MM)
COMPO OUT
DC OUT
LINE OUT L
LINE OUT R
DV-27
DV IN/OUT
J0-51
(230MM)
INDI
CONECTER
FRA-1
(55MM)
RS-73
FP-461
LOADING MOTOR
CASSECOM MOTOR
CAPSTAN MOTOR
MECHA DECK
CN001
SENSOR / REEL FG
MODE SW / CHIME SW
MD-70

4-2. PRINTED WIRING BOARDS AND SCHEMATIC DIAGRAMS

JC-15P (VIDEO CORE 1) SCHEMATIC DIAGRAM

— Ref.No. JC-15P Board; 1,000 Series —

• See page 4-27 for JC-15P BOARD printed wiring board.

JC-15P BOARD (1/7)

no mark : REC/PB mode
R : REC mode
P : PB mode

28 TO JC-15P BOARD (4/7) (SEE PAGE 4-15)
① TO JC-15P BOARD (5/7) (SEE PAGE 4-16)
TO CB-54P BOARD CN202 (SEE PAGE 4-62)
② TO JC-15P BOARD (2/7) (SEE PAGE 4-9)
③ TO JC-15P BOARD (4/7) (SEE PAGE 4-13)

IC401 PFIL (PAL) IC401 CX02185R

IC402 IC402 CX02184A BLK

IC406 IC406 ZA4024 BVRAM

CN401 70P

•SIGNAL PATH

	VIDEO SIGNAL			AUDIO SIGNAL
	CHROMA	Y	Y/CHROMA	
REC	➡	⇒	⇛	
PB	⇨	⇒	⇛	

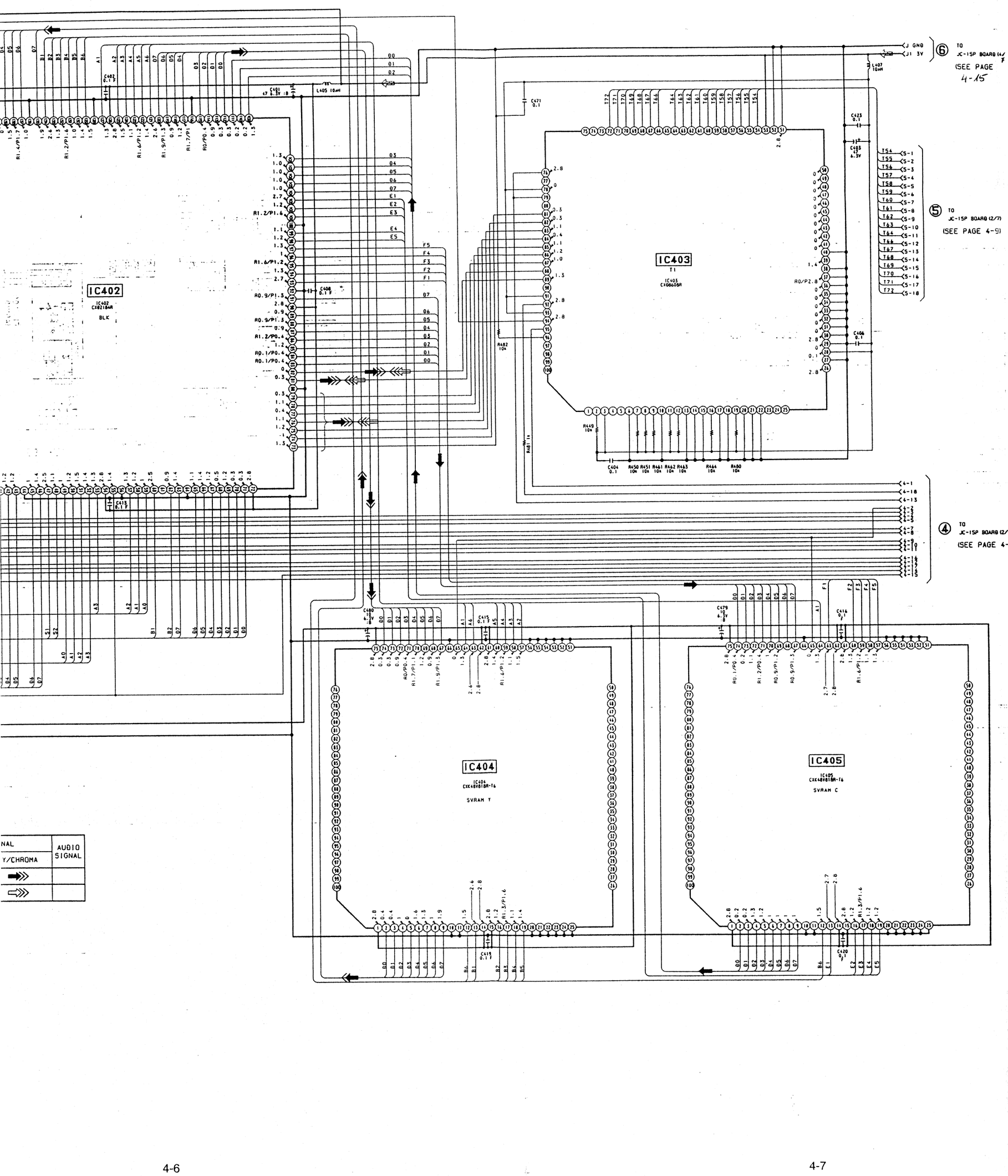
IC402
IC402
CXD2184AR
BLK
IC403
T1
IC403
CXD8608R
IC404
IC404
CXK4V8188R-T6
SVRAM Y
IC405
IC405
CXK4V8188R-T6
SVRAM C
J GND
J1 3V
TO
JC-1SP BOARD (4/
(SEE PAGE
4-15
TO
JC-1SP BOARD (2/7)
(SEE PAGE 4-9)
TO
JC-1SP BOARD (2/
(SEE PAGE 4-
AUDIO
SIGNAL
Y/CHROMA

JC-15P BOARD (1/7)

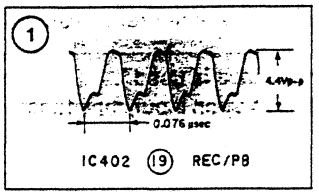

JC-15P BOARD (2/7)

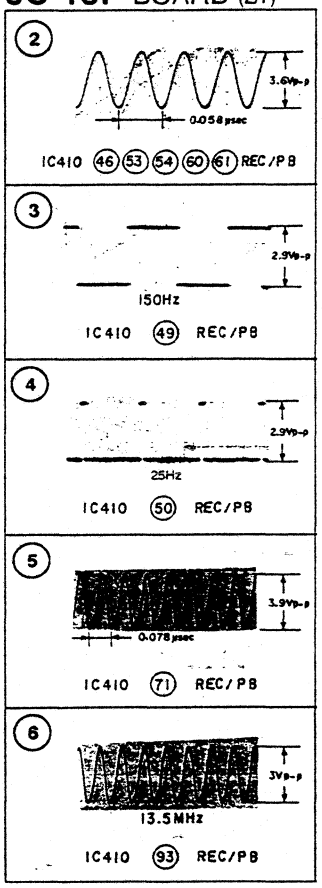

JC-15P BOARD (3/7)

JC-15P (VIDEO CORE 3) SCHEMATIC DIAGRAM

— Ref.No.JC-15P Board: 1.000 Series—

no mark : REC/PB mode
R : REC mode
P : PB mode

·See page 4-27 for JC-15P BOARD printed wiring board.

·SIGNAL PATH

	VIDEO SIGNAL			AUDIO SIGNAL
	CHROMA	Y	Y/CHROMA	
REC			➡	➡
PB			⇨	⇨

TO JC-15P BOARD (4/7) (17) (SEE PAGE 4-15)
VDD 17-1 17-2 17-3 17-4 17-5 SS GND 17-6 17-7
J2 3V J GND

TO JC-15P BOARD (2/7) (16) (SEE PAGE 4-10)
16-5 16-4 16-3 16-2 16-1 16-10 16-9 16-8 16-7 16-6

TO JC-15P BOARD (7/7) (19) (SEE PAGE 4-23)
19-1 19-2 19-3

TO JC-15P BOARD (2/7) (15) (SEE PAGE 4-10)
15-1 15-2 15-3 15-4 15-5 15-6 15-7 15-8 15-9 15-10 15-11 15-12 15-13 15-14 15-15 15-16 15-17 15-18

TO JC-15P BOARD (5/7) (20) (SEE PAGE 4-18)
20-1 20-2 20-3 20-4

TO JC-15P BOARD (2/7) (9) (SEE PAGE 4-10)
9-4 9-3 9-2 9-1

TO JC-15P BOARD (2/7) (8) (SEE PAGE 4-9)
8-2 8-1

TO AU-192 BOARD (2/2) CN915 (SEE PAGE 4-96)

CN403 70P
70 LANC DC
69 LANC SIG
68 SS GND
67 SS GND
66 CHIME VDD
65 CHIME SDA
64 CHIME SCK
63 CHIME GND
62 FLTD
61 TRKD
60 MECHA CS SFY
59 MECHA SCK
58 DATA FROM MECHA
57 DATA TO MECHA
56 JSWP
55 DRAM BANK
54 TBC REN
53 GND
52 EVER 3.3V
51 LANC TO TULIP
50 LANC FROM TULIP
49 LANC POWER ON
48 N.C.
47 SS GND
46 RESET FROM MODE
45 VTR 8S ON
44 CS MECHA
43 SCK
42 DATA FROM SP
41 DATA TO SP
40 READY RF EEPROM
39 RESET RF EEPROM
38 CS RF EEPROM
37 FLTT
36 GND
35 GND
34 GND
33 DTCS7
32 DTCS6
31 DTCS5
30 DTCS4
29 DTCS3
28 DTCS2
27 DTCS1
26 DTCS0
25 GND
24 VPCKCS
23 GND
22 VA0VCS
21 SC0VCS
20 SYCS
19 AFREF
18 GND
17 DTSC7
16 DTSC6
15 DTSC5
14 DTSC4
13 DTSC3
12 DTSC2
11 DTSC1
10 DTSC0
9 GND
8 VRCKCS
7 GND
6 FRPSC
5 TRPSC
4 GND
3 ORCK REF
2 GND
1 CLK 135

IC412
IC412
CXD2187AR
AM MIX ECC TBC

IC411
4MDRAM
IC411
μPD482445LGW-B12

JC-15P (VIDEO CORE 2) SCHEMATIC DIAGRAM

— Ref.No.JC-15P Board: 1.000 Series—

See page 4-27 for JC-15P BOARD printed wiring board.

JC-15P BOARD (2/7)

no mark : REC/PB mode
R : REC mode
P : PB mode
* : Can not be measured.

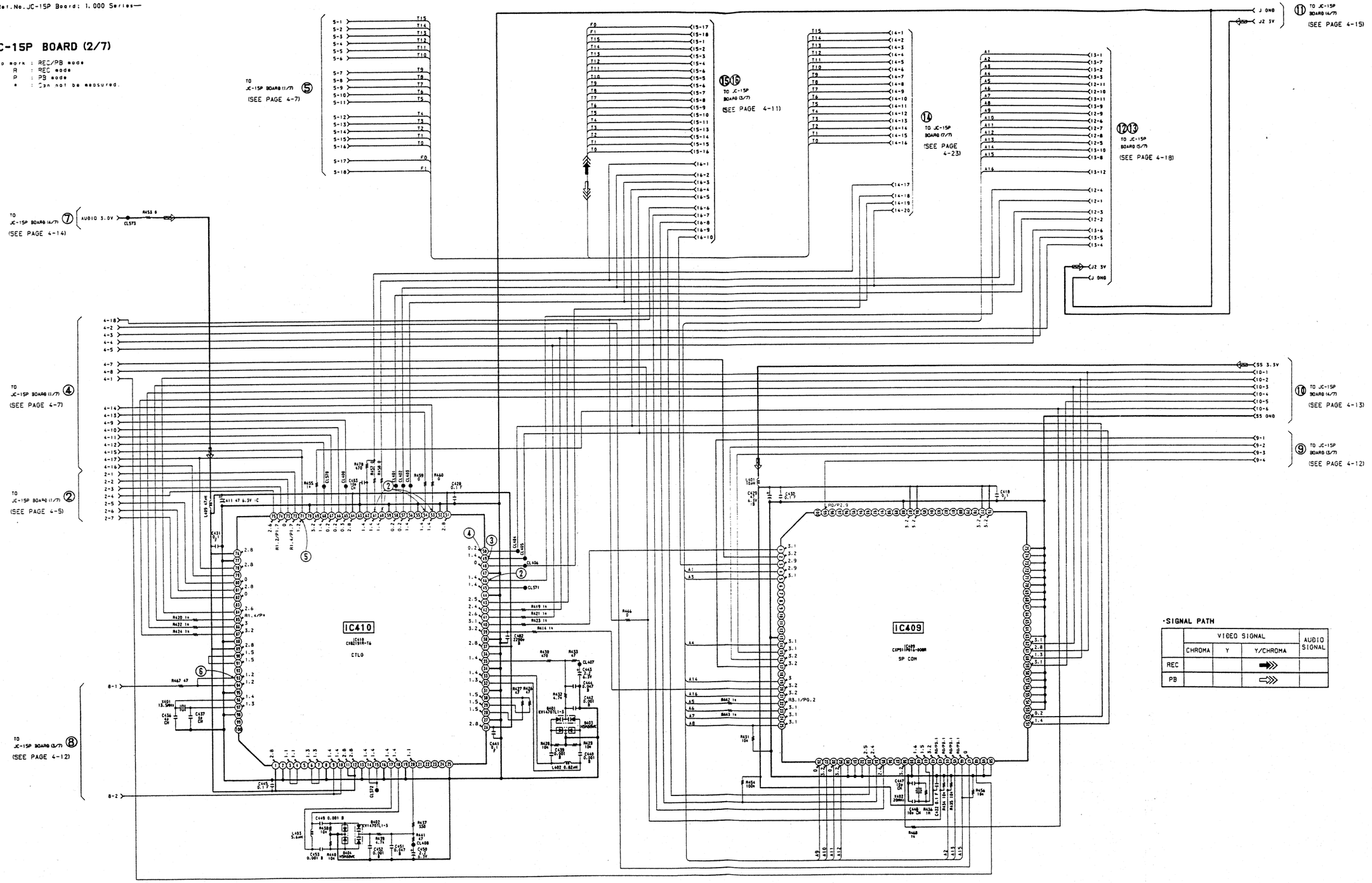

·SIGNAL PATH

	VIDEO SIGNAL			AUDIO SIGNAL
	CHROMA	Y	Y/CHROMA	
REC			➡	
PB			⇨	

JC-15P BOARD (4/7)

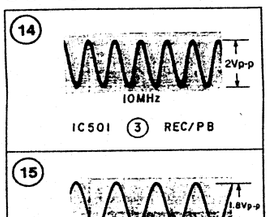

JC-15P (MODE CONTROL) SCHEMATIC DIAGRAM

· See page 4-27 for JC-15P BOARD printed wiring board.

— Ref.No.JC-15P Board; 1.000 Series —

JC-15P BOARD (4/7)

no mark : REC/PB mode
R : REC mode
P : PB mode
* : Can not be measured.

CN501 28P

SS END	1
13.5MHZ	2
CORE PRST	3
CORE PCEZ	4
NOR/XERST	5
CORE 0V32	6
CORE XINT	7
FLTT	8
FLTA SIZE	9
FLTA	10
C GOWN	11
K AD IN0	12
K AD IN1	13
K AD IN6	14
K AD IN2	15
BUZZER	16
START STOP SW	17
VTR MODE	18
EJECT	19
SS GND	20
UNREG	21
SSS.3V	22
PEAK LED	23
EXPOSURE B	24
EXPOSURE A	25
CONTROL B	26
CONTROL A	27
CAM MODE SW	28

TO AU-192 BOARD CN901 (SEE PAGE 4-96)

TO JC-15P BOARD (5/7) 22 (SEE PAGE 4-18)

CN500 15P

SS GND	1
SS GND	2
ZOOM SW	3
SS 3.3V	4
CAM MODE SW	5
CAM S/S SW	6
CAM STBY IN	7
PHOTO STBY	8
PHOTO REC	9
PHOTO FREEZE	10
PHONE JACK SW	11
TALLY	12
KAD IN4	13
KAD IN3	14
SS GND	15

TO AU-192 (2/2) BOARD CN902 (SEE PAGE 4-96)

TO JC-15P BOARD (5/7) 30 (SEE PAGE 4-16)

Q501 SWITCH

Q500 REG

IC500 RESET

TO JC-15P BOARD (2/7) 10 (SEE PAGE 4-10)

TO JC-15P BOARD (1/7) 3 (SEE PAGE 4-5)

TO JC-15P BOARD (5/7) 25 (SEE PAGE 4-16)

TO 08-75P BOARD CN901 (SEE PAGE 4-123)

9 | 10 | 11 | 12 | 13 | 14 | 15 | 16 | 17 | 18 | 19 | 20 | 21

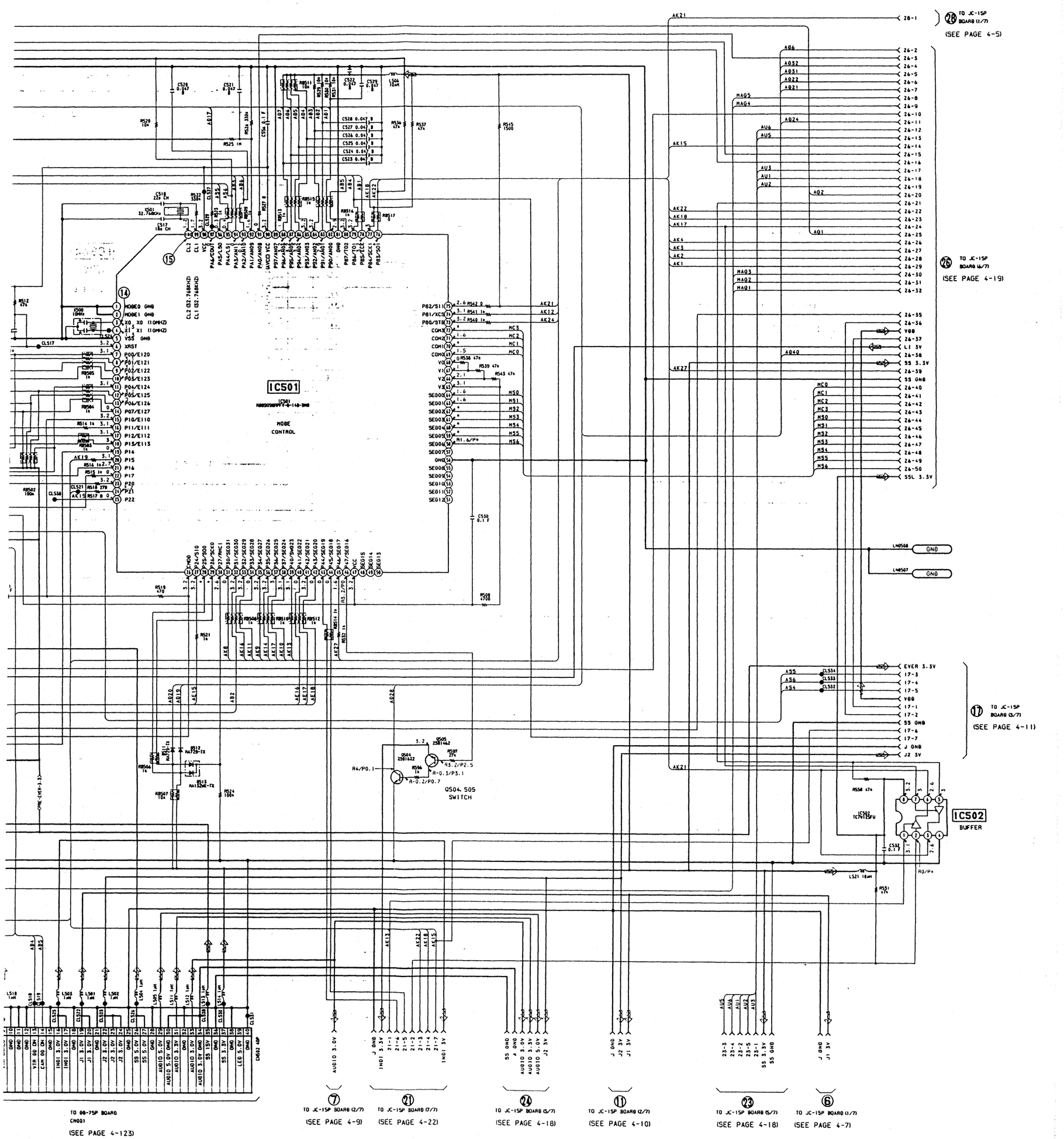

JC-15P (AUDIO) SCHEMATIC DIAGRAM

• See page 4-27 for JC-15P BOARD printed wiring board.

— Ref.No.JC-15P Board; 1,000 Series—

JC-15P BOARD (5/7)

CN641 70PIN

A 3.0V	1	
D 3.0V	2	
A 3.0V	3	
D 3.0V	4	
A GND	5	
D GND	6	
A GND	7	
D GND	8	
AU 5.0V	9	
AU 3.3V	10	
AU 5.0V	11	
AU 3.3V	12	
A GND	13	
D GND	14	
A GND	15	
D GND	16	
D GND	17	
D GND	18	
D GND	19	
D GND	20	
DFSO	21	CL641 B8
DFSI	22	CL642 B9
DEM	23	CL643 B7
SCLK	24	CL644 B6
MCLK	25	CL645
L/R	26	CL644
SIB	27	CL647 B5
SOA	28	CL648 B4
SCK	29	CL649 B3
D GND	30	
D GND	31	
D GND	32	
D GND	33	
CLK	34	
RESET	35	CL651
XLAT	36	CL652 A5
DATA FROM SP	37	CL653 A2
ATC	38	CL654 B2
ATLT	39	CL656 B1
DATA TO SP	40	CL658 A1
READY ADSP	41	CL655 A6
XRST	42	CL678 A3
AUDIO MUTE	43	CL657 A4
N.C.	44	
AUDIO PS	45	S1
AU INPUT GAIN	46	S2
CS	47	S3
EDIT PS	48	CL677 S4
WHT BAL	49	S5
S CON 2	50	S6
EXP ON LED	51	S7
F MANU LED	52	S8
N.C.	53	
N.C.	54	
SS GND	55	P1
SS 3.3V	56	P2
SIRCS 1	57	P3
SS 5.0V	58	P4
SIRCS 2	59	P5
NC	60	P6
NC	61	P7
A GND	62	
A GND	63	
N.C.	64	
A GND	65	
A GND	66	
S CON 1	67	
AU LINE OUT L	68	
J23V	69	
NC	70	

TO AU-192 BOARD (1/2) CN004 (SEE PAGE 4-93)

TO JC-15P BOARD (6/7) 40 HIFI/WIDE (SEE PAGE 4-19)

TO JC-15P BOARD (4/7) 30 30-1 / SS GND (SEE PAGE 4-13)

TO JC-15P BOARD (4/7) 25 SEIDEN GND (SEE PAGE 4-14)

CN643 15PIN

A GND	15	
AU LINE OUT R	14	
AU LINE OUT R SW	13	
A GND	12	
AU LINE OUT L	11	
AU LINE OUT L SW	10	
RFU OC OUT	9	Q10
GND	8	Q11
V OUT	7	Q12
GND	6	Q13
C OUT	5	Q14
GND	4	Q15
Y OUT	3	Q16
S JACK IN	2	Q17
V DET	1	Q18

TO JK-149 BOARD CN201 (SEE PAGE 4-90)

TO JC-15P BOARD (1/7) 1 (SEE PAGE 4-5)

1-1 Q18, 1-2 Q17, 1-3 Q16, J GND Q15, 1-4 Q14, J GND Q13, 1-5 Q12, J GND Q11, 1-6 Q10

L644 10uH

C675 10 6.3V :B

C674 0.1 F

IC646 HM62V256LT

IC646 SRAM

C646 0.1 F

IC644 IC644 CXD2190R J AUDIO

C679 0.1 F

RB642 220k, RB641 220k, Q641 XP4401 EIAJ, RB644 47k, RB643 47k, C641 0.1 F, C642 0.1 F, C643 10 6.3V, C673 1000p B, FB653, D653 RD8.2UM, D654 MA2S111

Q641 SWITCH

IC641 INVERTER — IC641 TC75S04FU, C644 0.1 F

IC642 INVERTER — IC642 TC75S04FU, R645 0

R642 0, R643 1k, C645 0.1 F

C650 0.1 F, R652 1k, R648 1k, R649 1k, CL660, CL661, C647 0.1 F, R651 47k

IC643 IC643 CXD2513Q PLL/OSC

R655 1M, R656 330, C652 0.1 F, X641 24.576MHz, C648 0.1 F, C649 22p, C651 22p, CL643

L641 10uH, C653 4.7 6.3V :B, C654 0.1 F

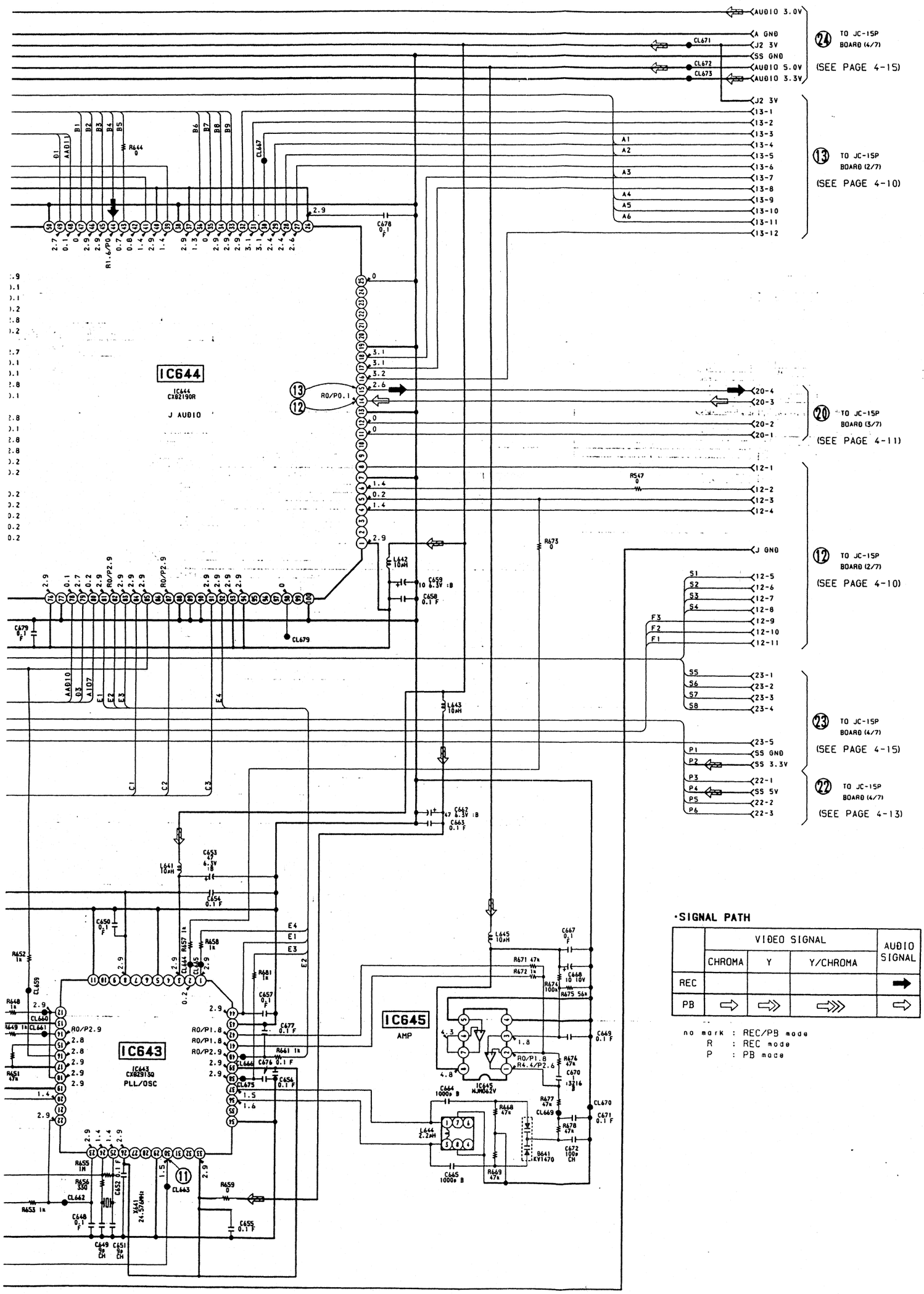

JC-15P BOARD (5/7)

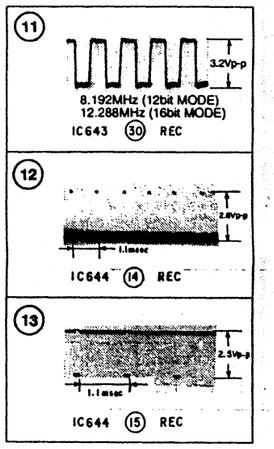

·SIGNAL PATH

	VIDEO SIGNAL			AUDIO SIGNAL
	CHROMA	Y	Y/CHROMA	
REC				➡
PB	⇨	⇨	⇨	⇨

no mark : REC/PB mode
R : REC mode
P : PB mode

JC-15P (HI CONTORL) SCHEMATIC DIAGRAM

— Ref.No. JC-15P Board: 1,000 Series—

• See page 4-27 for JC-15P BOARD printed wiring board.

JC-15P BOARD (6/7)

no mark : REC/PB mode
R : REC mode
P : PB mode
* : Can not be measured.

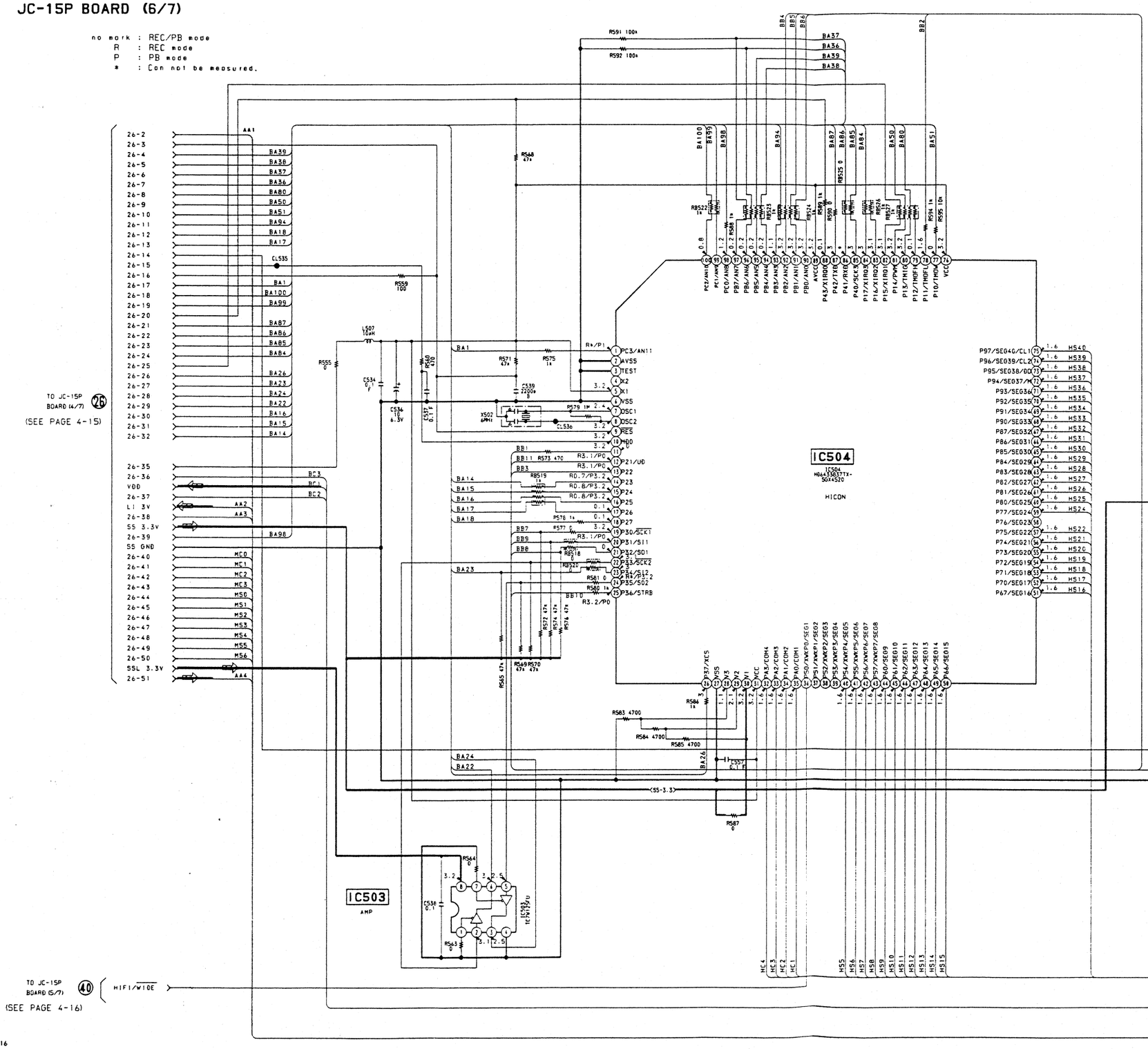

8 | 9 | 10 | 11 | 12 | 13 | 14 | 15 | 16 | 17 | 18 | 19 | 20 | 21

IC504
IC504 H0443587?X-5014520
HICON

IC505
CHIME
IC505 CX08525M
NOISE FILTER 1-6K/20K

Q507-509
SWITCH

Q504 UN9113 SWITCH
Q507 UN9113
Q508 SP4401
Q509 2SB1132

CN505 30P

1	S5 3.3V
2	AU PEAK LED
3	N.C
4	N.C
5	N.C
6	MSEG0
7	MSEG1
8	MSEG6
9	MSEG2
10	MSEG3
11	MSEG4
12	MSEG5
13	MCOM0
14	MCOM1
15	MCOM2
16	MCOM3
17	HCOM1
18	HCOM2
19	HCOM3
20	HCOM4
21	HSEG33
22	HSEG34
23	HSEG36
24	HSEG35
25	HSEG37
26	HSEG38
27	HSEG40
28	N.C
29	N.C
30	LI 3V

TO
FK-68 BOARD
CN408
(SEE PAGE 4-85)

CN506 30P

1	HSEG6
2	HSEG5
3	HSEG8
4	HSEG7
5	HSEG10
6	HSEG9
7	HSEG12
8	HSEG11
9	HSEG13
10	HSEG14
11	HSEG15
12	HSEG16
13	HSEG17
14	HSEG18
15	HSEG19
16	HSEG20
17	HSEG21
18	HSEG22
19	HSEG24
20	HSEG25
21	HSEG26
22	HSEG27
23	HSEG28
24	HSEG29
25	HSEG30
26	HSEG31
27	HSEG32
28	HSEG39
29	S5 GND
30	K AD IN5

TO
FK-68 BOARD
CN410
(SEE PAGE 4-85)

HI CONT
JC-15P (

JC-15P (DV INPUT/OUTPUT), DV-27 (DV TERMINAL) SCHEMATIC DIAGRAM

— Ref.No. JC-15P, DV-27 Boards: 1,000 Series —

·See page 4-27 for JC-15P BOARD printed wiring board.

JC-15P BOARD (7/7)

no mark : REC/PB mode
R : REC mode
P : PB mode
* : Can not be measured.

TO JC-15P BOARD (4/7) (21) (SEE PAGE 4-15)
TO JC-15P BOARD (2/7) (14) (SEE PAGE 4-10)
TO JC-15P BOARD (3/7) (19) (SEE PAGE 4-11)

JC-15P BOARD (7/7)

(8) 6MHz 3Vp-p
IC700 (8) REC/PB

(9) 0.055μsec 4Vp-p
IC701 (47) REC/PB

IC700 — DV CONTROL

IC701 — DV SIGNAL PROCESS

CHEMATIC DIAGRAM

RD (7/7)

/PB mode
mode
mode
not be measured.

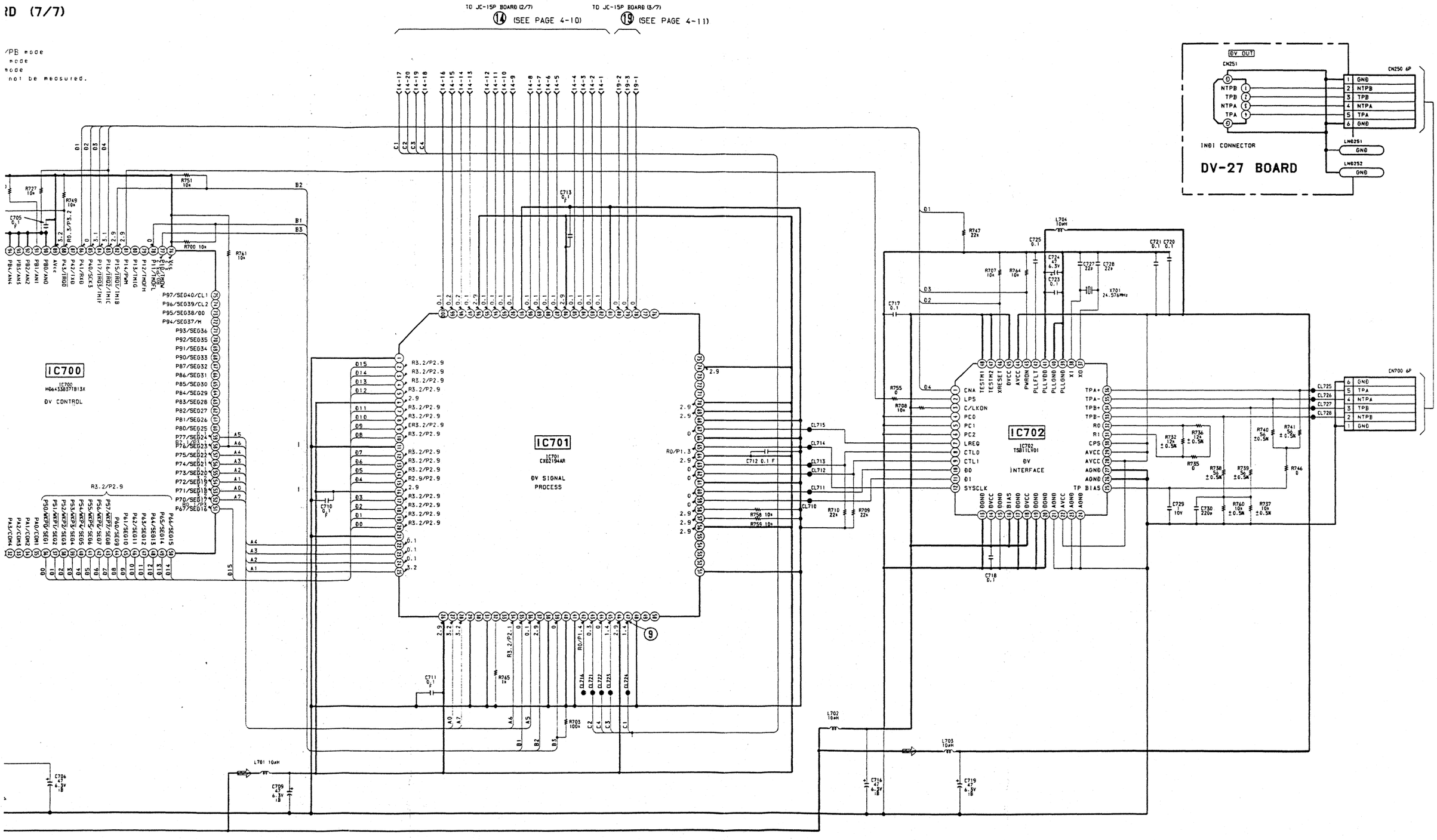

DCR-VX9000E

DV-27 (DV TERMINAL) PRINTED WIRING BOARD

— Ref. No. DV-27 Board; 1,000 Series —

DV-27 BOARD (SIDE A)

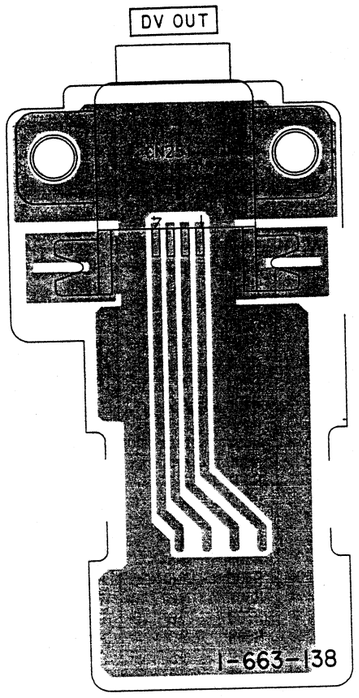

DV-27 BOARD (SIDE B)

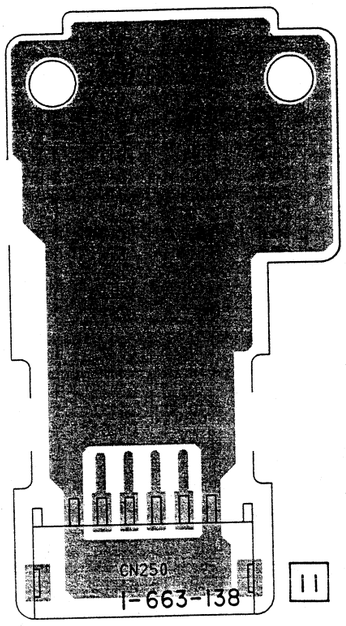

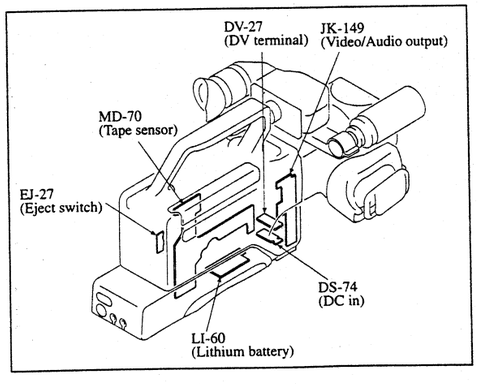

JC-15P BOARD

C400	C-14	C525	B-11	C730	D-9	L506	B-12	R456	C-4	R568	A-6	R735	D-8
C401	C-15	C526	B-11			L507	A-11	R457	D-3	R569	B-11	R736	D-8
C402	B-14	C527	A-12	CN401	D-13	L508	A-6	R458	D-3	R570	B-11	R737	D-9
C403	B-13	C528	A-12	CN403	D-5	L509	A-6	R459	D-3	R571	A-11	R738	D-9
C404	A-14	C529	A-12	CN500	A-10	L510	D-6	R460	D-3	R572	A-11	R739	D-9
C405	D-15	C530	B-5	CN501	A-14	L511	D-12	R461	A-14	R573	A-6	R740	D-9
C406	A-13	C532	C-4	CN502	D-12	L512	D-12	R462	A-14	R574	A-11	R741	D-9
C407	C-15	C534	A-7	CN505	B-9	L513	D-5	R463	A-14	R575	A-6	R742	B-11
C408	A-15	C536	A-7	CN506	B-10	L514	D-5	R464	A-13	R576	A-11	R746	D-9
C409	C-15	C537	A-7	CN641	B-4	L516	A-11	R466	B-14	R577	A-10	R747	D-9
C411	C-14	C538	B-10	CN643	C-1	L518	A-3	R467	D-5	R578	B-10	R749	D-10
C412	C-11	C539	A-10	CN700	D-8	L519	A-3	R468	C-5	R579	A-10	R750	C-11
C413	B-1	C545	A-5			L520	D-6	R469	B-13	R580	B-10	R751	C-10
C414	D-12	C547	A-6	D401	C-14	L521	C-4	R470	C-4	R581	B-10	R752	B-11
C415	C-2	C556	B-6	D402	B-14	L641	B-1	R471	B-13	R583	B-7	R753	C-11
C416	B-2	C557	B-7	D403	C-14	L642	B-3	R472	C-6	R584	B-7	R754	B-11
C417	D-1	C641	D-16	D404	B-14	L643	A-2	R473	B-12	R585	B-7	R755	D-7
C418	C-6	C642	D-16	D500	C-9	L644	A-15	R474	B-14	R586	B-7	R758	D-10
C419	D-2	C643	C-16	D501	C-9	L645	A-14	R475	D-14	R587	B-7	R759	C-10
C420	C-2	C644	A-2	D502	C-10	L646	A-3	R476	D-13	R588	A-11	R760	D-9
C421	C-1	C645	A-2	D507	B-5	L700	C-10	R477	D-14	R589	A-7	R761	B-6
C422	C-5	C646	A-4	D508	B-5	L701	C-8	R478	D-3	R590	A-7	R762	C-6
C423	B-13	C647	B-2	D511	B-5	L702	D-10	R480	A-13	R591	A-11	R763	C-6
C428	D-3	C648	B-3	D512	B-5	L703	D-10	R481	B-14	R592	A-11	R764	D-8
C429	C-6	C649	B-2	D513	B-5	L704	D-10	R482	B-14	R594	A-7	R765	C-7
C430	C-6	C650	B-1	D641	A-15			R500	A-2	R595	A-7		
C431	D-4	C651	B-2	D653	A-10	Q500	B-4	R501	D-5	R596	B-12	RB500	B-5
C436	C-14	C652	A-2	D654	A-10	Q501	A-5	R503	B-4	R597	B-5	RB501	A-11
C437	C-14	C653	B-1			Q504	B-12	R504	A-12	R600	A-5	RB502	A-11
C439	C-14	C654	B-1	FB653	A-10	Q505	B-12	R505	B-4	R601	A-5	RB503	A-5
C440	C-14	C655	A-2			Q506	A-6	R506	B-4	R602	A-5	RB504	A-11
C441	C-3	C656	A-2	IC401	C-15	Q507	A-6	R507	A-4	R603	A-5	RB505	A-11
C442	C-14	C657	A-1	IC402	B-15	Q508	A-6	R508	B-6	R604	A-5	RB506	A-5
C443	C-14	C658	B-3	IC403	B-14	Q509	A-6	R510	A-12	R605	A-6	RB507	A-5
C444	C-14	C659	B-3	IC404	D-2	Q641	C-16	R511	A-6	R606	A-6	RB508	B-5
C445	C-4	C662	A-2	IC405	C-2			R512	A-6	R607	A-6	RB509	B-6
C447	C-5	C663	A-2	IC406	D-1	R402	C-4	R514	A-6	R608	A-6	RB510	B-5
C448	C-5	C664	A-15	IC409	C-6	R410	C-16	R515	A-5	R609	A-6	RB511	B-11
C449	B-14	C665	A-15	IC410	C-3	R411	C-16	R516	A-5	R610	A-6	RB512	B-5
C450	C-14	C667	A-14	IC411	C-11	R412	C-15	R517	A-5	R642	A-2	RB513	B-6
C451	B-14	C668	A-14	IC412	C-12	R413	C-15	R518	A-5	R644	B-4	RB514	B-5
C452	B-14	C669	A-15	IC500	B-5	R414	C-3	R519	A-5	R645	A-2	RB515	B-6
C453	B-13	C670	A-15	IC501	B-6	R419	C-3	R520	A-6	R648	B-1	RB516	B-6
C455	C-13	C671	A-15	IC502	C-4	R420	D-4	R521	A-5	R649	B-1	RB517	B-6
C456	D-12	C672	A-15	IC503	B-10	R421	C-3	R522	B-11	R651	B-1	RB518	A-11
C457	B-12	C673	A-10	IC504	A-7	R422	D-4	R523	A-6	R652	B-1	RB519	B-10
C458	B-13	C674	A-4	IC505	A-5	R423	C-3	R524	A-5	R653	B-2	RB520	B-11
C469	C-13	C675	A-3	IC641	A-2	R424	D-4	R525	B-7	R655	B-2	RB522	A-11
C471	B-14	C676	A-2	IC642	A-2	R426	C-3	R526	B-7	R656	B-2	RB523	A-11
C476	D-12	C677	A-2	IC643	B-2	R427	C-3	R527	B-6	R657	B-1	RB524	A-7
C478	B-12	C678	B-13	IC644	B-3	R428	C-14	R529	A-12	R658	B-1	RB525	A-7
C479	B-2	C679	A-3	IC645	A-15	R429	C-14	R530	A-12	R659	A-2	RB526	A-7
C480	D-3	C702	B-11	IC646	A-3	R430	C-14	R531	A-12	R661	A-2	RB527	A-7
C481	C-1	C705	D-11	IC700	C-10	R431	B-5	R532	B-5	R668	A-15	RB641	C-16
C482	C-3	C706	C-10	IC701	C-7	R432	C-14	R536	B-12	R669	A-15	RB642	C-16
C483	D-3	C709	C-8	IC702	D-8	R433	C-14	R537	B-11	R671	A-15	RB643	C-16
C500	C-5	C710	B-7			R434	C-4	R538	B-6	R672	A-15	RB644	C-16
C501	C-5	C711	B-7	L401	C-6	R435	C-4	R539	B-6	R673	B-1		
C502	B-5	C712	C-7	L402	C-14	R436	C-5	R540	B-6	R674	A-15	X401	C-4
C504	B-5	C713	C-8	L403	C-14	R437	C-14	R541	B-6	R675	A-15	X402	C-5
C505	B-5	C716	D-10	L405	C-14	R438	C-14	R542	B-6	R676	A-15	X500	A-11
C509	A-6	C717	D-8	L406	C-14	R439	B-14	R543	B-6	R677	A-15	X501	B-11
C510	A-6	C718	D-7	L407	B-13	R440	C-13	R545	B-12	R678	A-15	X502	A-10
C511	A-5	C719	D-10	L409	C-14	R441	C-14	R547	A-14	R681	A-2	X641	B-3
C512	A-6	C720	D-8	L410	D-11	R442	C-4	R550	C-4	R700	C-10	X700	C-6
C517	A-11	C721	D-9	L411	D-13	R443	C-4	R551	C-4	R703	C-6	X701	D-9
C518	B-11	C723	D-9	L500	B-5	R449	A-14	R555	A-11	R707	D-8		
C520	B-11	C724	D-10	L501	D-6	R450	A-14	R559	A-11	R708	D-7		
C521	B-7	C725	D-8	L502	D-6	R451	A-14	R560	A-6	R709	D-7		
C522	A-12	C727	D-9	L503	D-11	R453	B-4	R563	B-10	R710	D-7		
C523	A-12	C728	D-9	L504	D-5	R454	C-5	R564	B-11	R727	D-10		
C524	A-12	C729	D-9	L505	D-11	R455	D-4	R565	B-11	R732	D-8		

JC-15P (MAIN) PRINTED WIRING BOARD

— Ref. No. JC-15P Board; 1,000 Series —

There are few cases that the part printed on this diagram isn't mounted in this model.

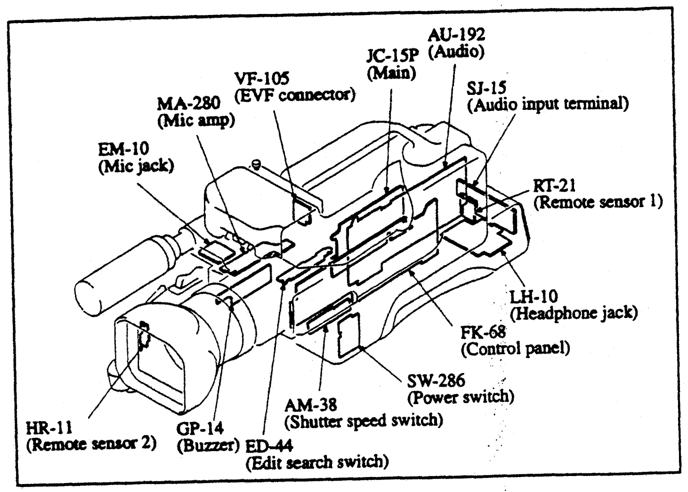

JC-15P BOARD (SIDE A)

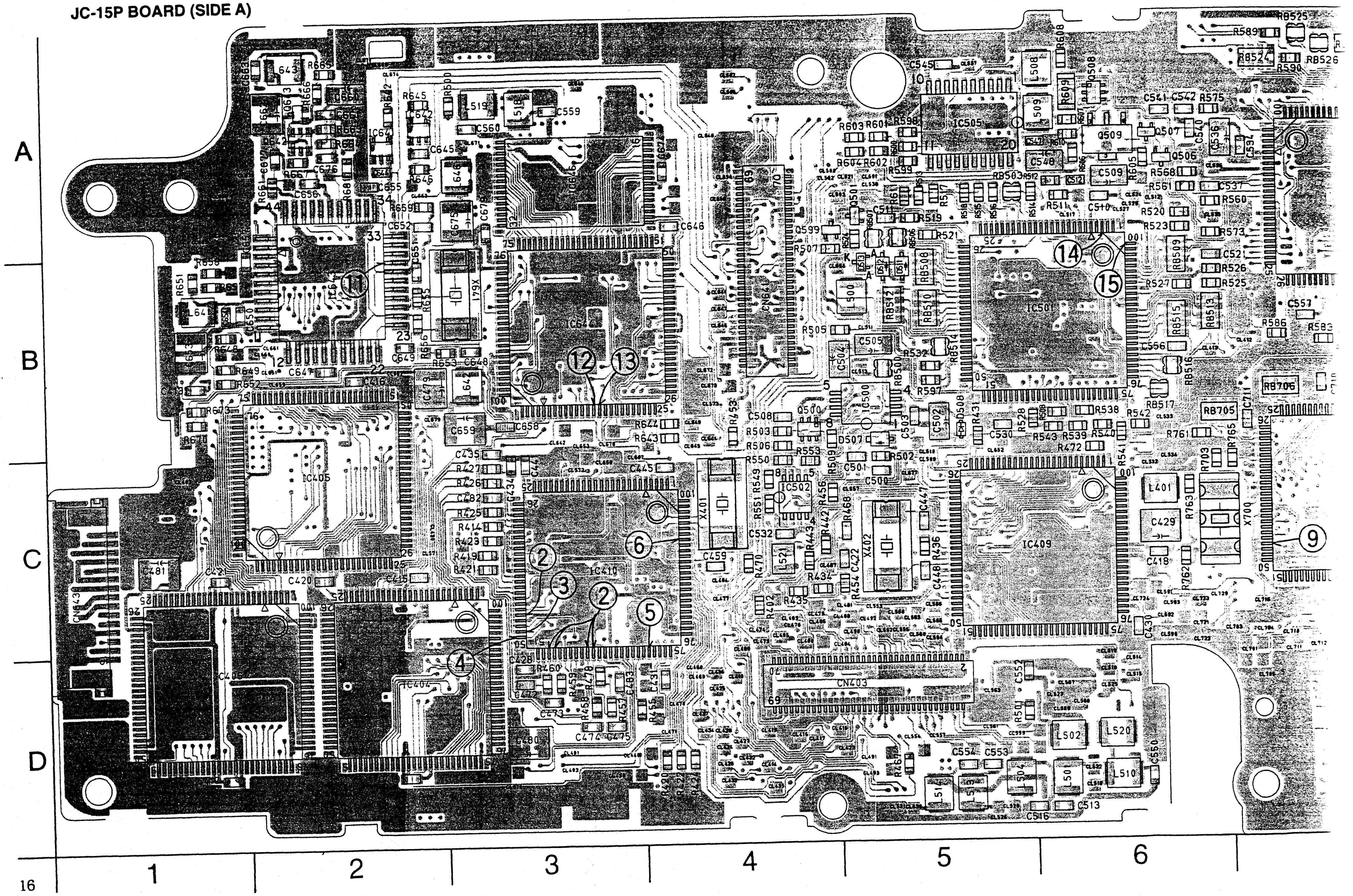

JC-15P BOARD (SIDE B)

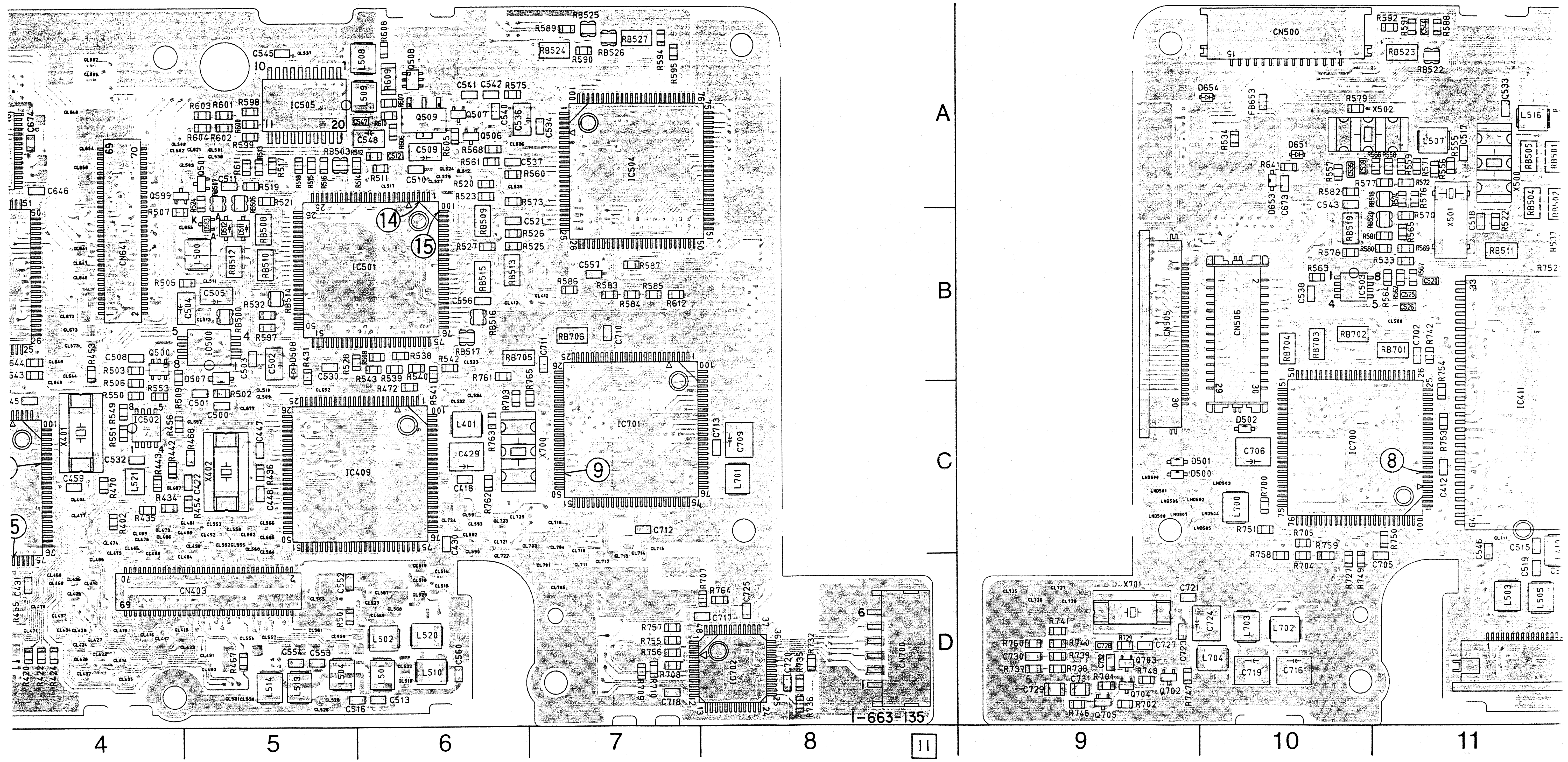

JC-15P BOARD (SIDE B)

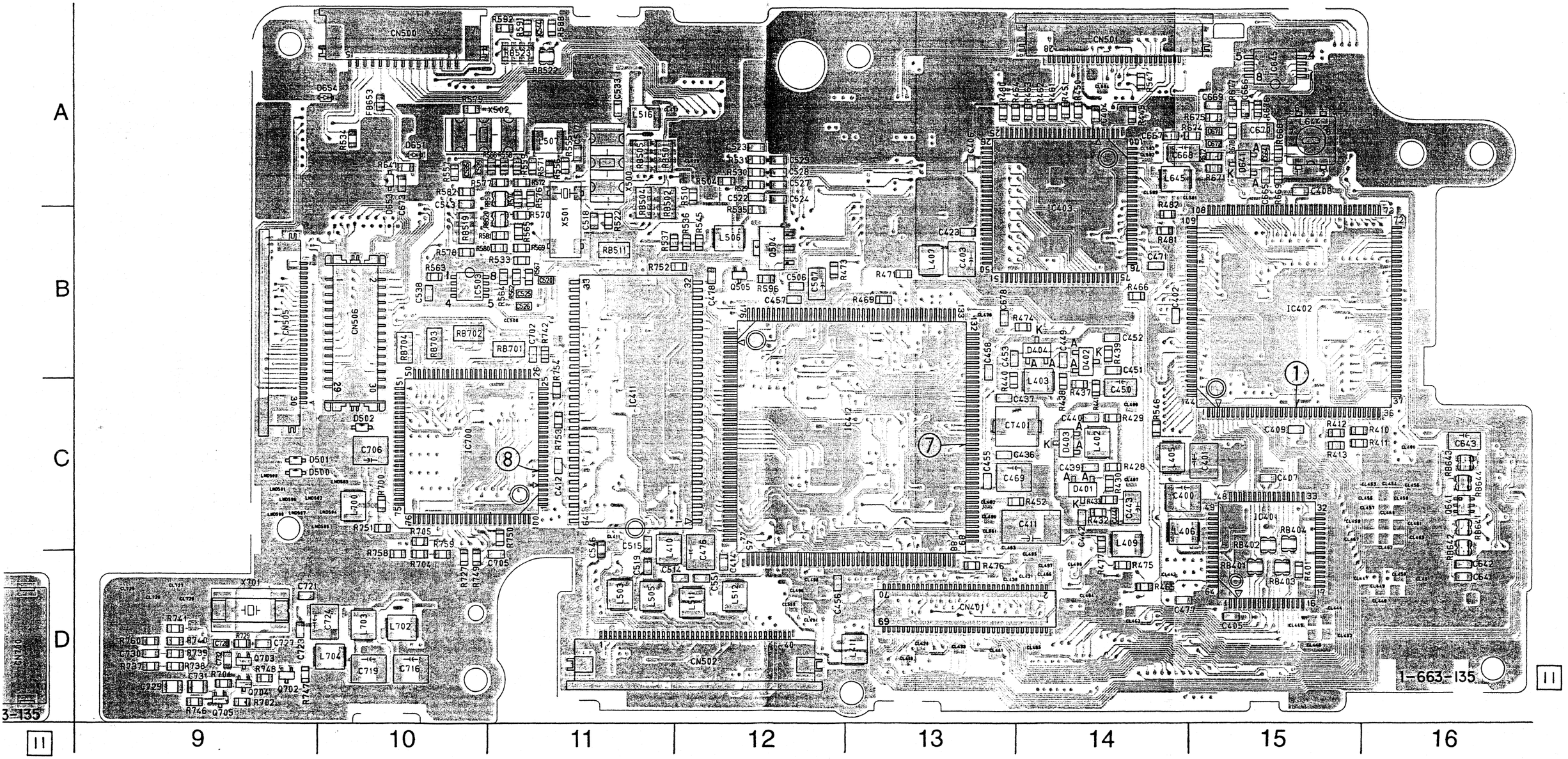
CN500
CN501
CN502
CN506
CN505
CN401
IC402
IC403
IC411
IC412
IC700
X501
X502
X701
Q504
Q505
Q703
Q704
Q702
Q705
D502
D501
D500
D654
D651
D653
D652
D673
D678
D404
D402
D403
D401
D641
D642
D643
D644
D645
D646
D647
D648
D649
D650
D672
D671
D670
D669
D668
D667
D666
D665
D664
D663
D662
D661
D660
D659
D658
D657
D656
D655
D654
D653
D652
D651
D650
D649
D648
D647
D646
D645
D644
D643
D642
D641
D640
D639
D638
D637
D636
D635
D634
D633
D632
D631
D630
D629
D628
D627
D626
D625
D624
D623
D622
D621
D620
D619
D618
D617
D616
D615
D614
D613
D612
D611
D610
D609
D608
D607
D606
D605
D604
D603
D602
D601
D600
D599
D598
D597
D596
D595
D594
D593
D592
D591
D590
D589
D588
D587
D586
D585
D584
D583
D582
D581
D580
D579
D578
D577
D576
D575
D574
D573
D572
D571
D570
D569
D568
D567
D566
D565
D564
D563
D562
D561
D560
D559
D558
D557
D556
D555
D554
D553
D552
D551
D550
D549
D548
D547
D546
D545
D544
D543
D542
D541
D540
D539
D538
D537
D536
D535
D534
D533
D532
D531
D530
D529
D528
D527
D526
D525
D524
D523
D522
D521
D520
D519
D518
D517
D516
D515
D514
D513
D512
D511
D510
D509
D508
D507
D506
D505
D504
D503
D502
D501
D500
L700
L701
L702
L703
L704
L705
L706
L707
L708
L709
L710
L711
L712
L713
L714
L715
L716
L717
L718
L719
L720
L721
L722
L723
L724
L725
L726
L727
L728
L729
L730
L731
L732
L733
L734
L735
L736
L737
L738
L739

CD-160 (CCD IMAGER) PRINTED WIRING BOARD

— Ref. No. CD-160 Board: 8.000 Series —

There are few cases that the part printed on this diagram isn't mounted in this model.

CD-160 BOARD (SIDE A)

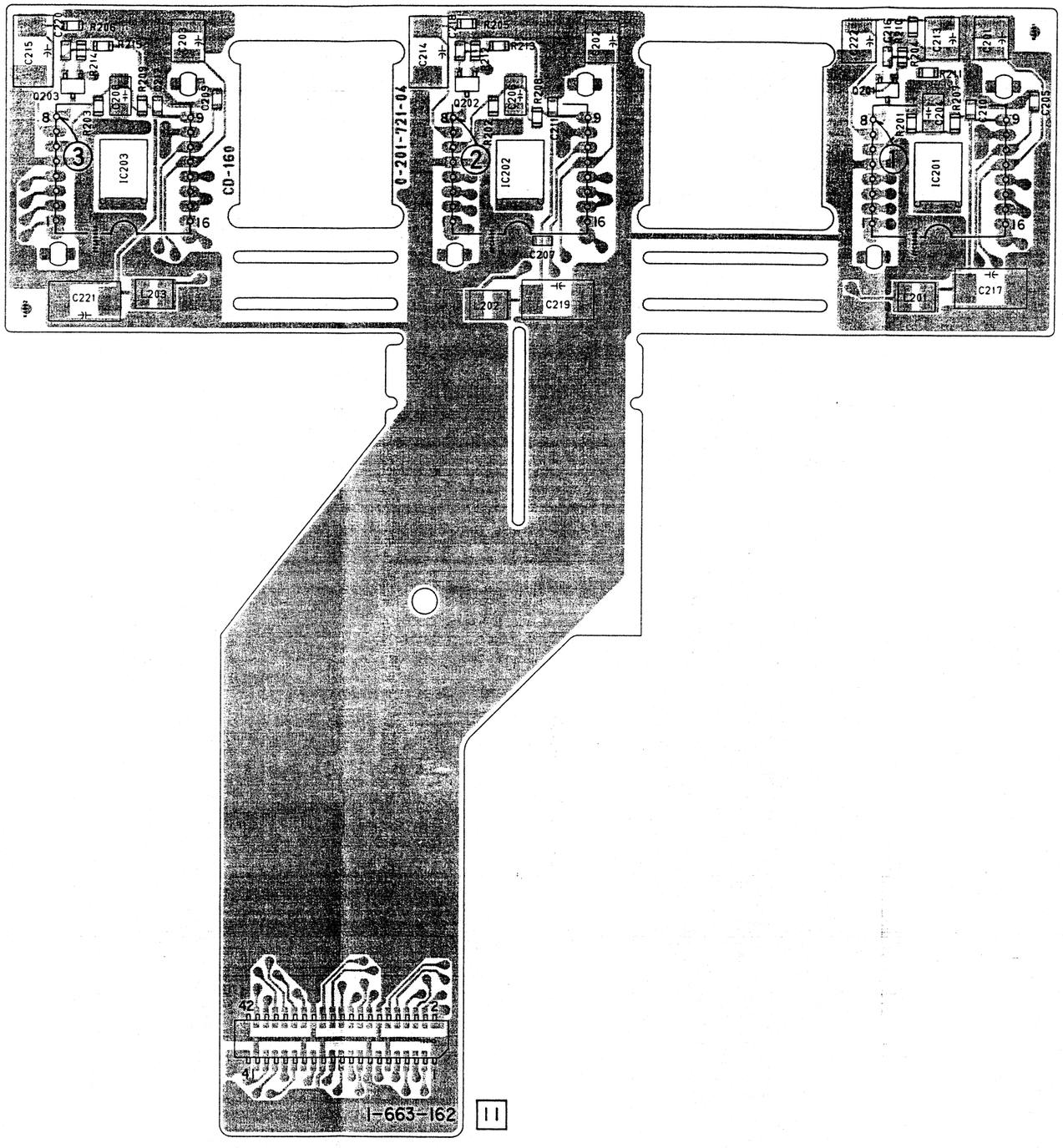

CD-160 BOARD (SIDE B)

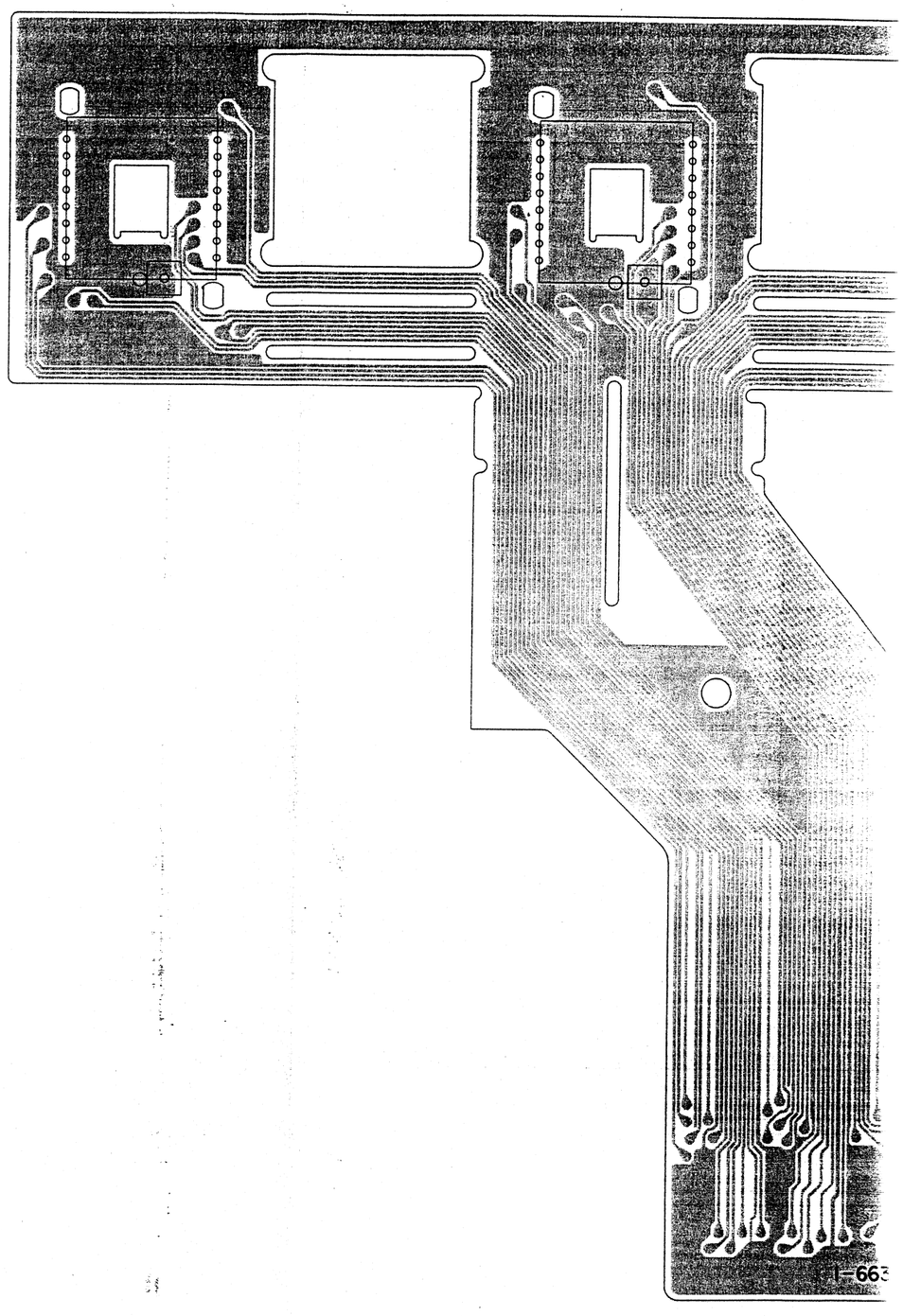

-160 BOARD (SIDE B)

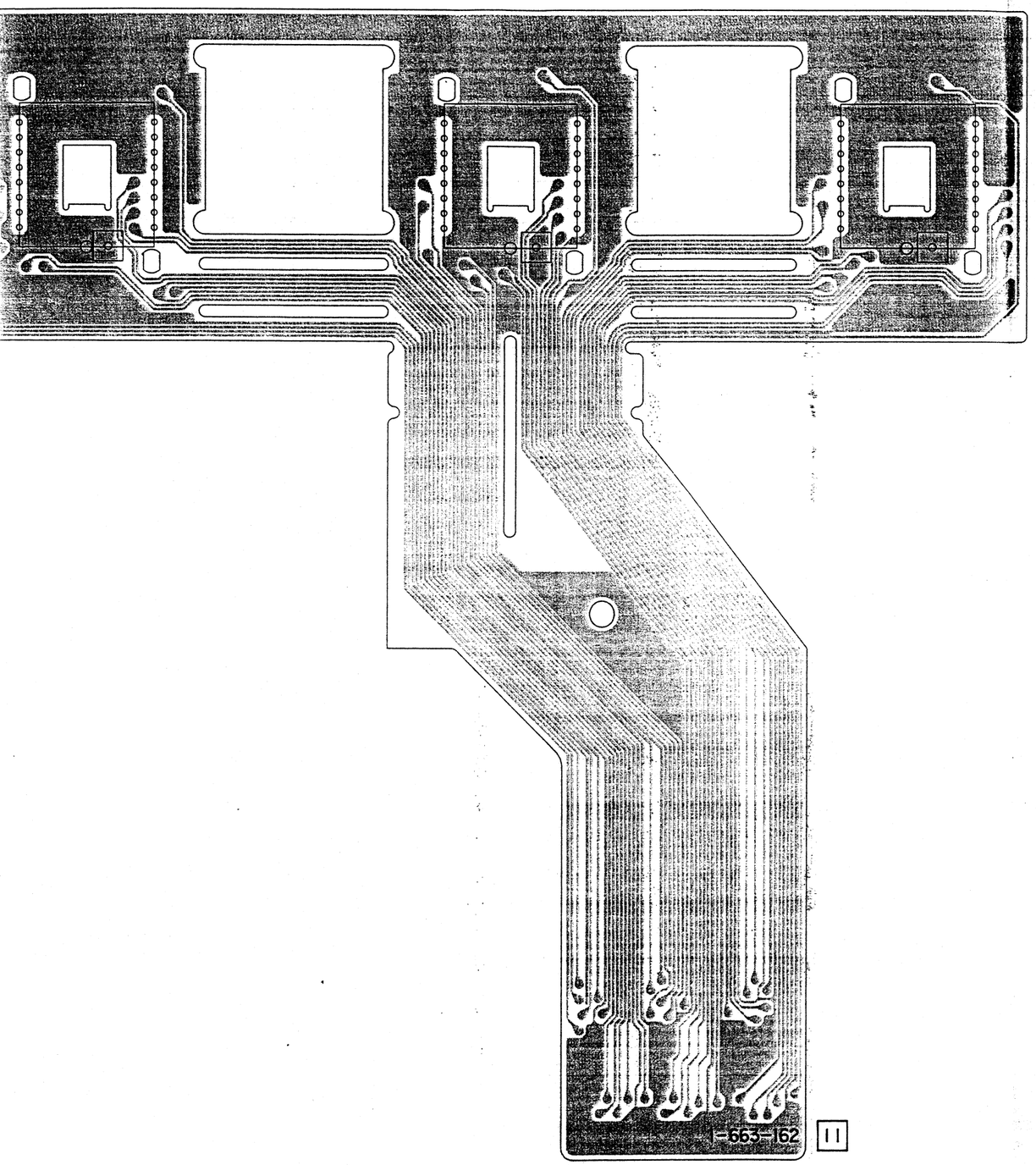

CD-160 BOARD (CAMERA REC)

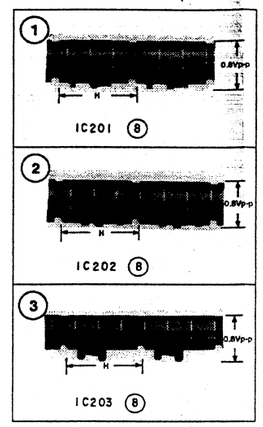

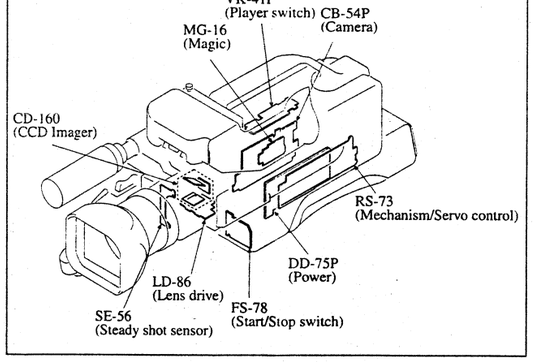

Precautions Upon Replacing CCD Imager

- The CD-160 board mounted as a repair part is not equipped with a CCD imager.
  When replacing this board, remove the CCD imager from the old one and mount it onto the new one.
- If the CCD imager has been replaced, carry out all the adjustments for the camera section.
- As the CCD imager may be damaged by static electricity from its structure, handle it carefully like for the MOS IC.
  In addition, ensure that the receiver is not covered with dusts nor exposed to strong light.

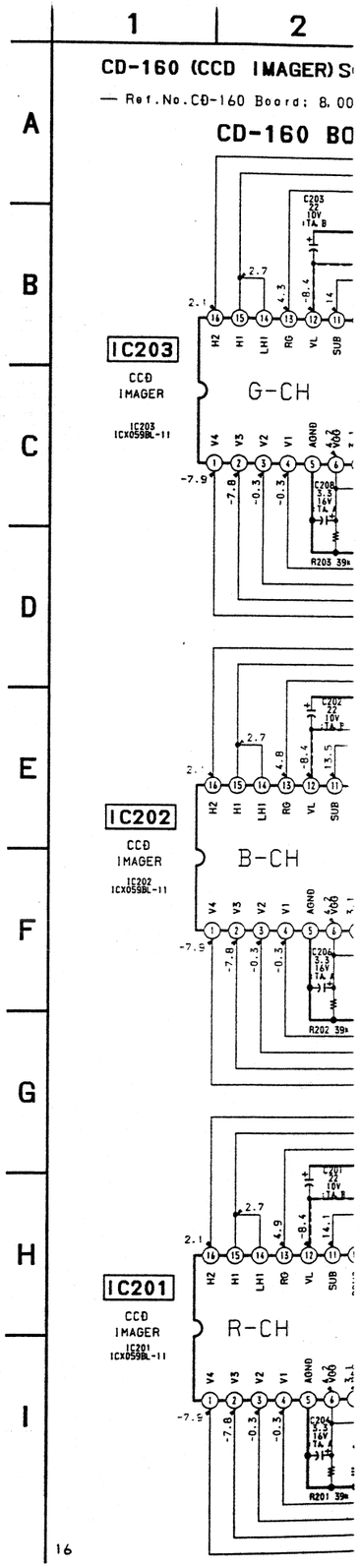

CD-160 BOARD (CAMERA REC)

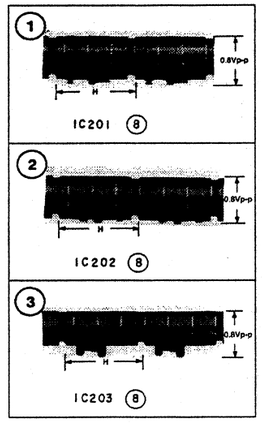

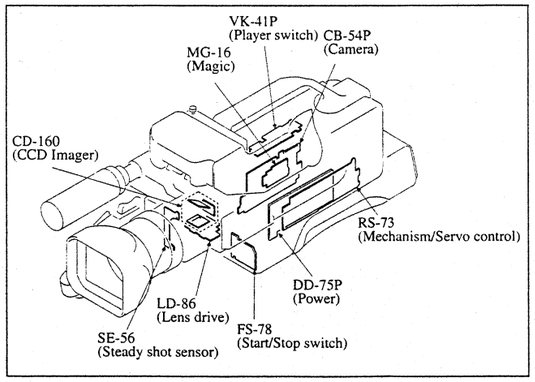

Precautions Upon Replacing CCD Imager

- The CD-160 board mounted as a repair part is not equipped with a CCD imager.
  When replacing this board, remove the CCD imager from the old one and mount it onto the new one.
- If the CCD imager has been replaced, carry out all the adjustments for the camera section.
- As the CCD imager may be damaged by static electricity from its structure, handle it carefully like for the MOS IC.
  In addition, ensure that the receiver is not covered with dusts nor exposed to strong light.

CD-160 (CCD IMAGER) SCHEMATIC DIAGRAM

— Ref.No.CD-160 Board: 8,000 Series —

CD-160 BOARD

no mark : CAMERA REC mode

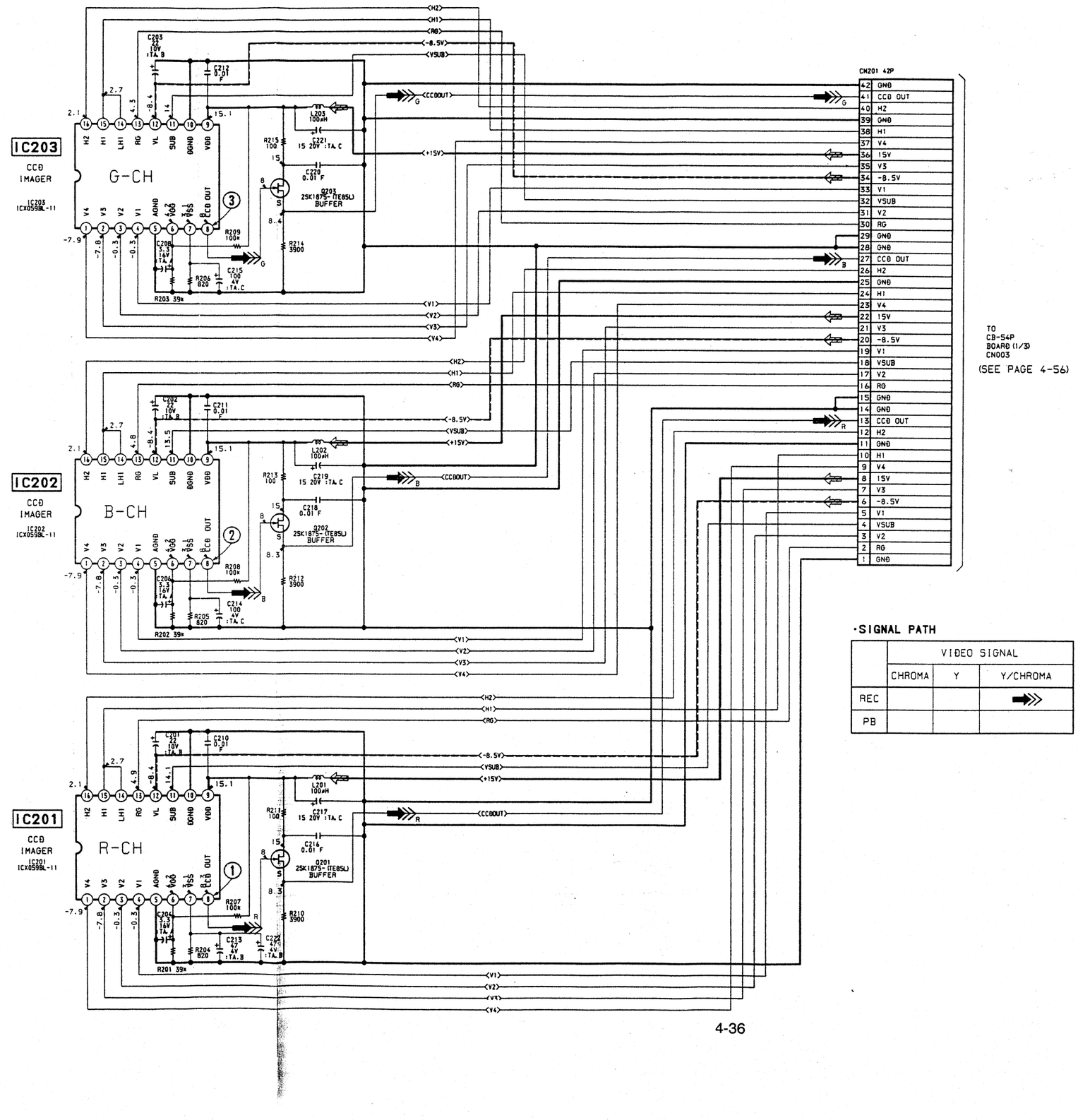

CN201	
42	GND
41	CCD OUT
40	H2
39	GND
38	H1
37	V4
36	15V
35	V3
34	-8.5V
33	V1
32	VSUB
31	V2
30	RG
29	GND
28	GND
27	CCD OUT
26	H2
25	GND
24	H1
23	V4
22	15V
21	V3
20	-8.5V
19	V1
18	VSUB
17	V2
16	RG
15	GND
14	GND
13	CCD OUT
12	H2
11	GND
10	H1
9	V4
8	15V
7	V3
6	-8.5V
5	V1
4	VSUB
3	V2
2	RG
1	GND

•SIGNAL PATH

	VIDEO SIGNAL		
	CHROMA	Y	Y/CHROMA
REC			➡
PB			

SE-56 (STEADY SHOT SENSOR) SCHEMATIC DIAGRAM

— Ref.No.SE-56 Board: 4,000 Series —

SE-56 BOARD

no mark:CAMERA REC mode

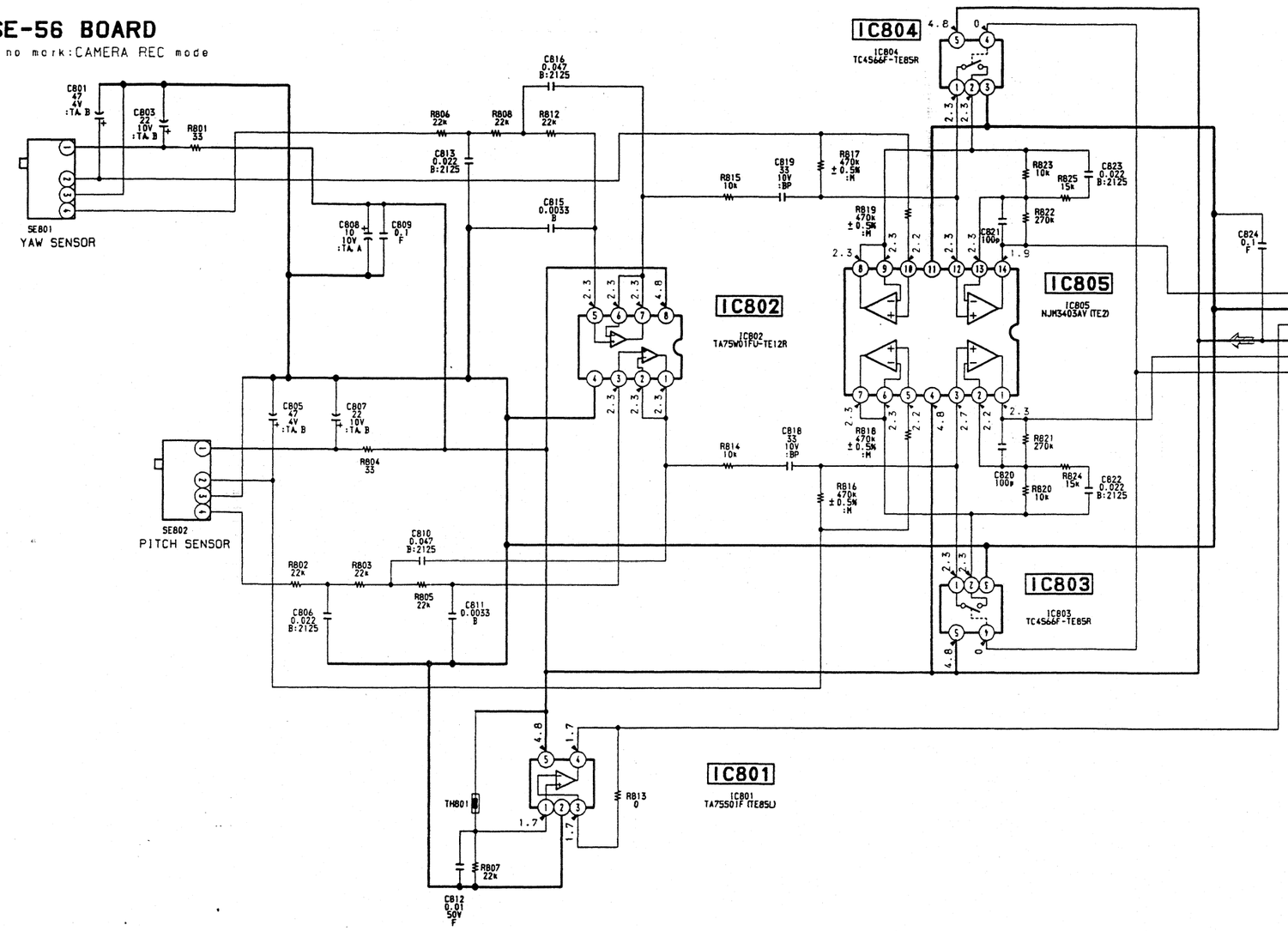

SE-56 BOARD (SIDE A)

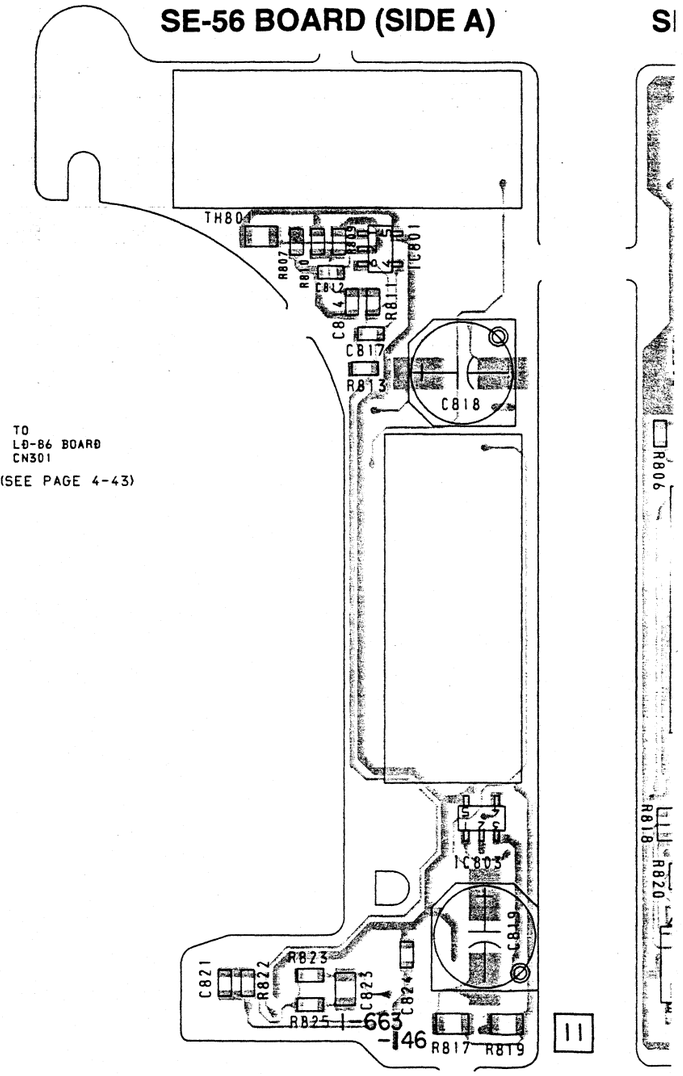

SOR) PRINTED WIRING BOARD
Series —

There are few cases that the part printed on this diagram isn't mounted in this model.

DE A)

SE-56 BOARD (SIDE B)

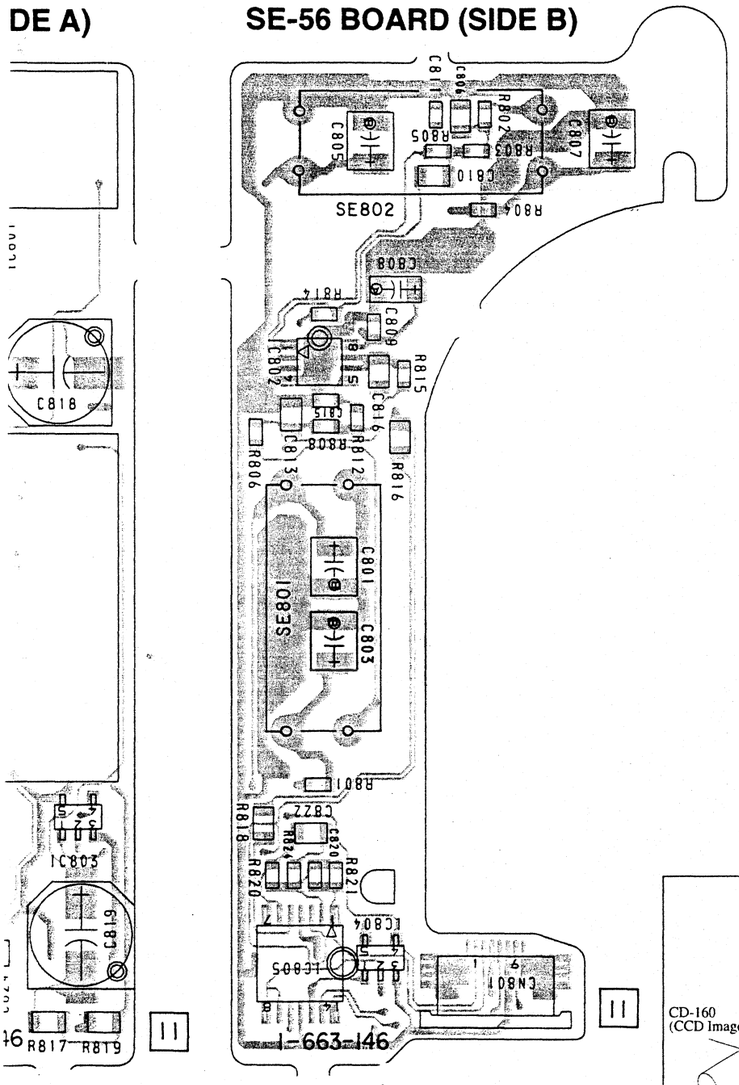

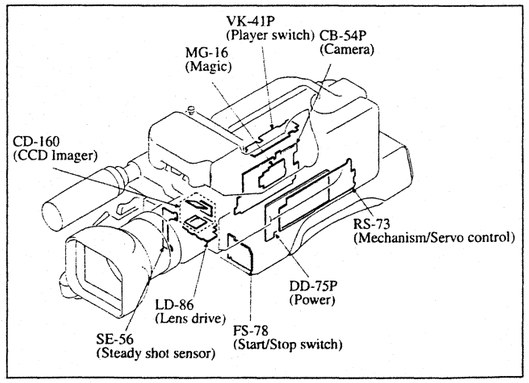

LD-86 (LENS DRIVE) PRINTED WIRING BOARD
— Ref. No. LD-86 Board; 3,000 Series —

There are few cases that the part printed on this diagram isn't mounted in this model.

LD-86 BOARD, COMPLETE

C302	B-6	C350	D-11	L312	D-2	R337	B-10
C303	C-4	C351	D-10	L315	E-3	R338	B-11
C304	C-6	C352	E-4			R339	C-9
C305	B-9	C390	E-2	Q301	B-12	R340	B-10
C306	B-7			Q302	B-1	R341	B-10
C307	C-4	CN301	A-3	Q303	B-9	R344	B-4
C308	C-5	CN302	A-5	Q304	B-3	R345	C-10
C309	C-6	CN304	C-1	Q305	D-3	R346	C-4
C310	C-6			Q306	B-4	R348	C-4
C311	C-8	D301	B-10	Q307	E-4	R349	C-4
C312	B-7	D302	B-8			R350	B-3
C315	D-4	D303	B-8	R301	C-9	R355	B-12
C316	D-6	D304	B-5	R302	B-7	R356	B-9
C317	B-5	D305	B-8	R303	C-4	R361	C-4
C319	D-5			R304	C-4	R362	C-3
C320	C-5	FB001	C-12	R305	C-6	R363	C-9
C321	B-9			R306	C-6	R364	C-9
C322	D-4	IC301	C-5	R307	B-9	R365	C-9
C324	B-9	IC302	E-5	R308	B-7	R366	C-9
C325	B-10	IC303	B-4	R309	B-8	R369	C-1
C326	E-4	IC304	B-6	R310	C-9	R370	D-3
C327	C-9	IC305	B-3	R311	B-9	R371	D-4
C328	C-4	IC306	B-2	R312	B-5	R372	D-3
C330	B-3	IC307	D-9	R313	B-7	R373	D-2
C331	C-3	IC308	C-3	R314	B-7	R374	C-9
C333	B-10	IC309	D-3	R315	C-8	R375	D-8
C334	C-10	IC310	C-8	R316	C-6	R376	E-8
C335	C-4	IC311	C-11	R317	C-9	R377	C-8
C336	C-10	IC312	E-11	R318	B-7	R378	C-8
C337	C-10	IC313	E-3	R319	D-4	R379	B-8
C338	E-10			R320	D-4	R380	B-8
C339	D-3	L301	B-4	R321	D-4	R381	C-9
C340	C-9	L302	B-12	R322	D-6	R382	C-8
C341	D-3	L303	B-5	R323	C-6	R383	B-10
C342	C-7	L304	B-1	R324	D-6	R390	D-5
C343	D-1	L305	C-10	R327	B-9	R391	E-4
C344	C-8	L306	D-10	R328	D-5	R398	D-1
C345	C-2	L307	D-2	R329	E-4	R399	C-12
C346	C-2	L308	C-1	R330	E-4		
C347	C-2	L309	D-1	R331	B-4	X301	D-8
C348	D-2	L310	C-9	R334	B-9		
C349	C-2	L311	D-10	R335	B-10		

LD-86

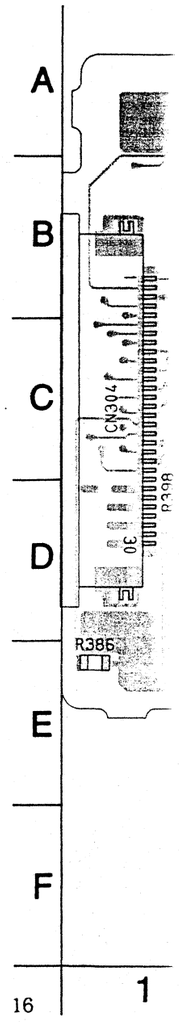

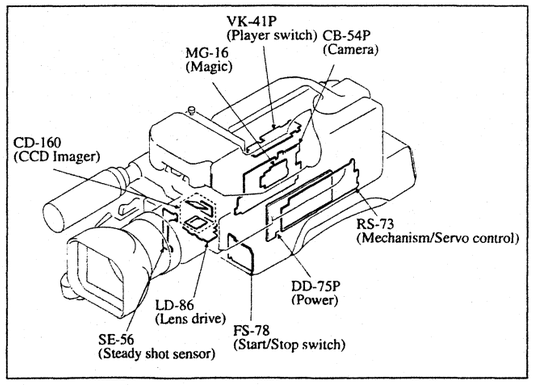

n't mounted in this model.

LD-86 BOARD (SIDE A)

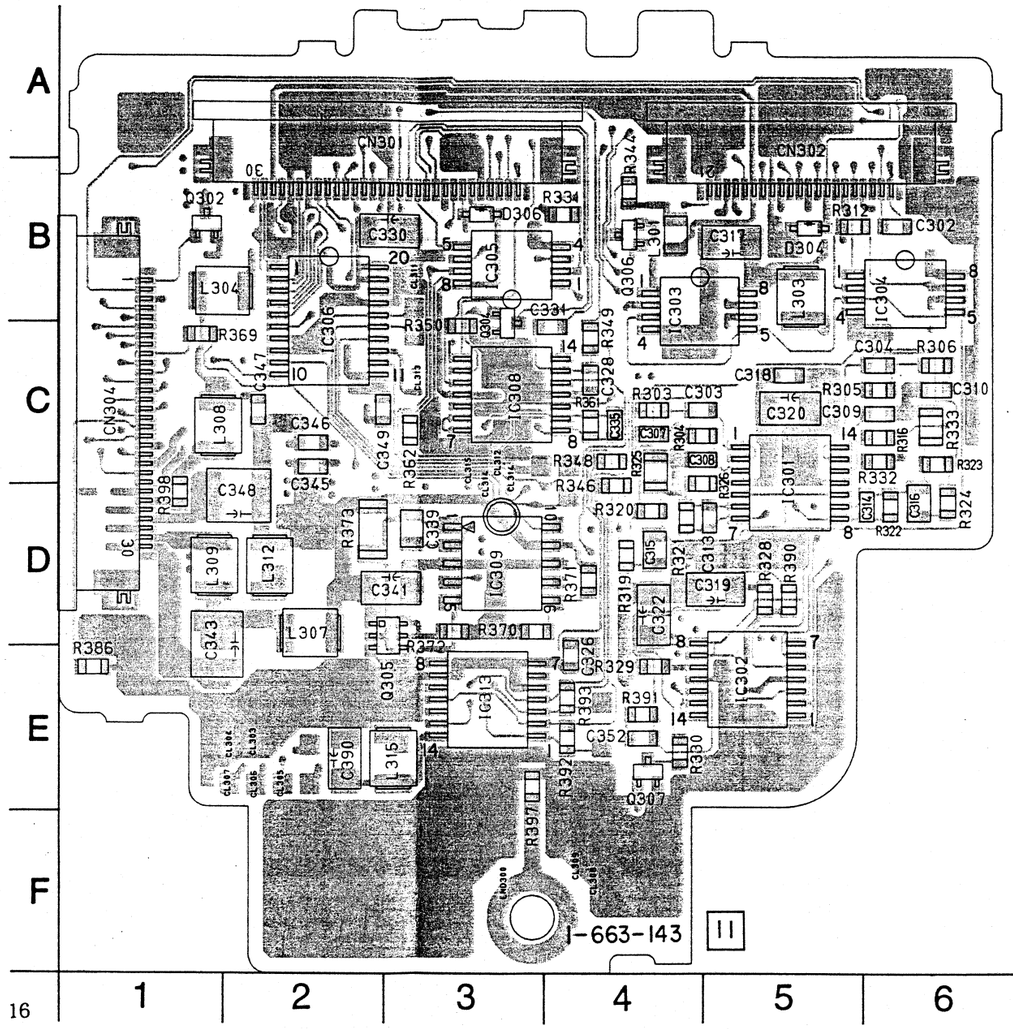

LD-86 BOARD (SIDE B)

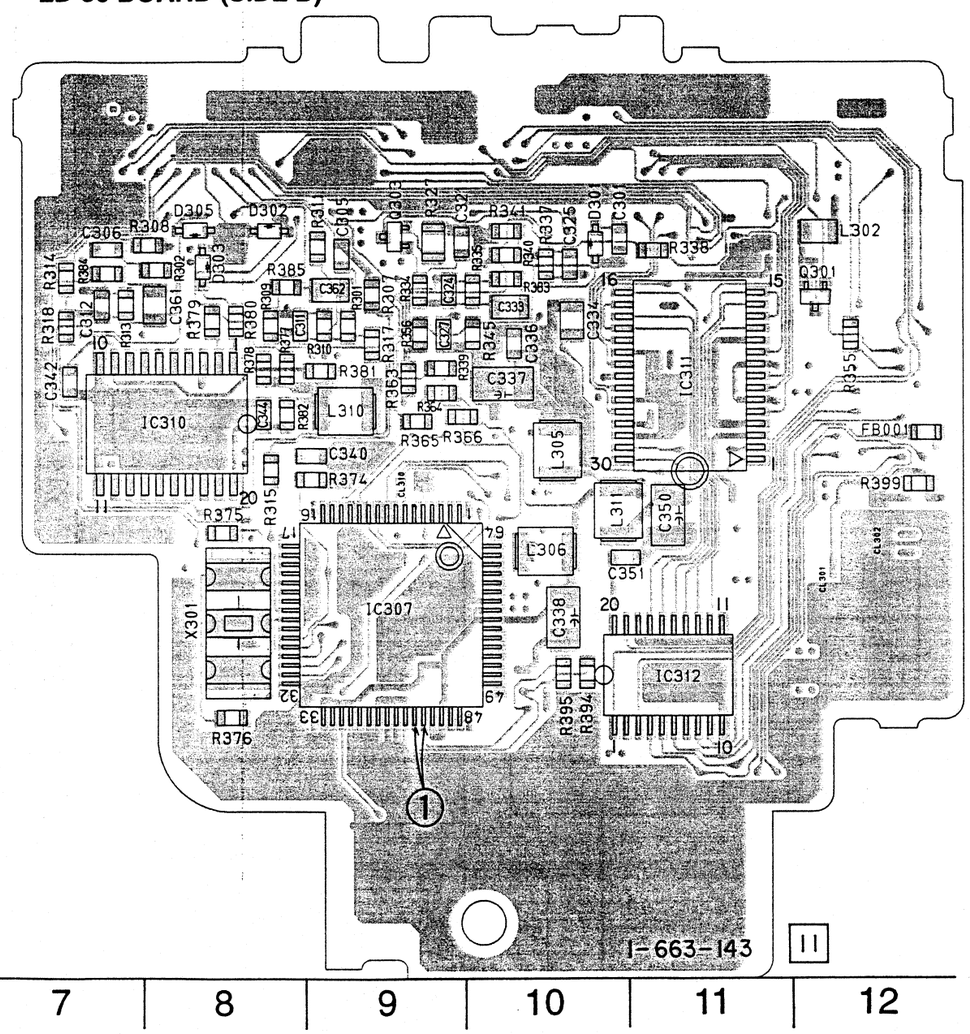

o control)

LD-86 (LENS DRIVE) SCHEMATIC DIAGRAM

— Ref.No.LD-86 Board: 3,000 Series —

LD-86 BOARD

no mark : CAMERA REC mode

IC313 VAP PWM REG

IC301 VAP FILTER

IC307 CXP81120-037R VAP CONTROL

IC302 VAP REG

IC304 VAP DRIVER

IC306 VAP A/D CONV.

IC303 VAP DRIVER

IC305 HALL AMP IRIS DRIVER

IC308 HALL AMP IRIS DRIVER

CN302 21P

VAP LOCK MOTOR-	1
VAP LOCK MOTOR+	2
VAP LOCK SENS	3
SENS GND	4
Y OUT	5
P DRIVE A	6
P DRIVE B	7
P DUMP A	8
P DUMP B	9
Y DUMP A	10
Y DUMP B	11
Y DRIVE A	12
Y DRIVE B	13
GND	14
P OUT	15
VCC	16
MF VCC	17
MF FI	18
MF FO	19
MF GND	20
TEMP OUT	21

LENS ACTIVE PRISM ACTUATOR UNIT

CN301 30P

SENSE VCC	1
ZOOM RESET A	2
ZOOM RESET B	3
FOCUS RESET	4
LENS RESET GND	5
DRIVE (+)	6
DRIVE (-)	7
CONT (+)	8
CONT (-)	9
HALL (-)	10
BIAS (-)	11
HALL (+)	12
BIAS (+)	13
NO POSI. SENS	14
NO SENS GND	15
FOCUS A	16
FOCUS B	17
FOCUS A	18
FOCUS B	19
ZOOM A	20
ZOOM B	21
ZOOM B	22
ZOOM A	23
GND	24
YS OUT	25
GND	26
TEMP DET	27
0 5V	28
PS OUT	29
C RESET	30

LENS BLOCK

TO SE-56 BOARD CN801 (SEE PAGE 4-38)

IC307
VAP CONTROL

IC309
VAP LOCK DRIVE

Q305 SWITCH

IC308
HALL AMP IRIS DRIVER

IC310
MF DETECTOR

IC312
FOCUS/ZOOM PRE DRIVER

IC311
FOCUS/ZOOM DRIVER

LD-86 BOARD (CAMERA REC)

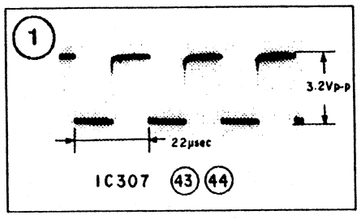

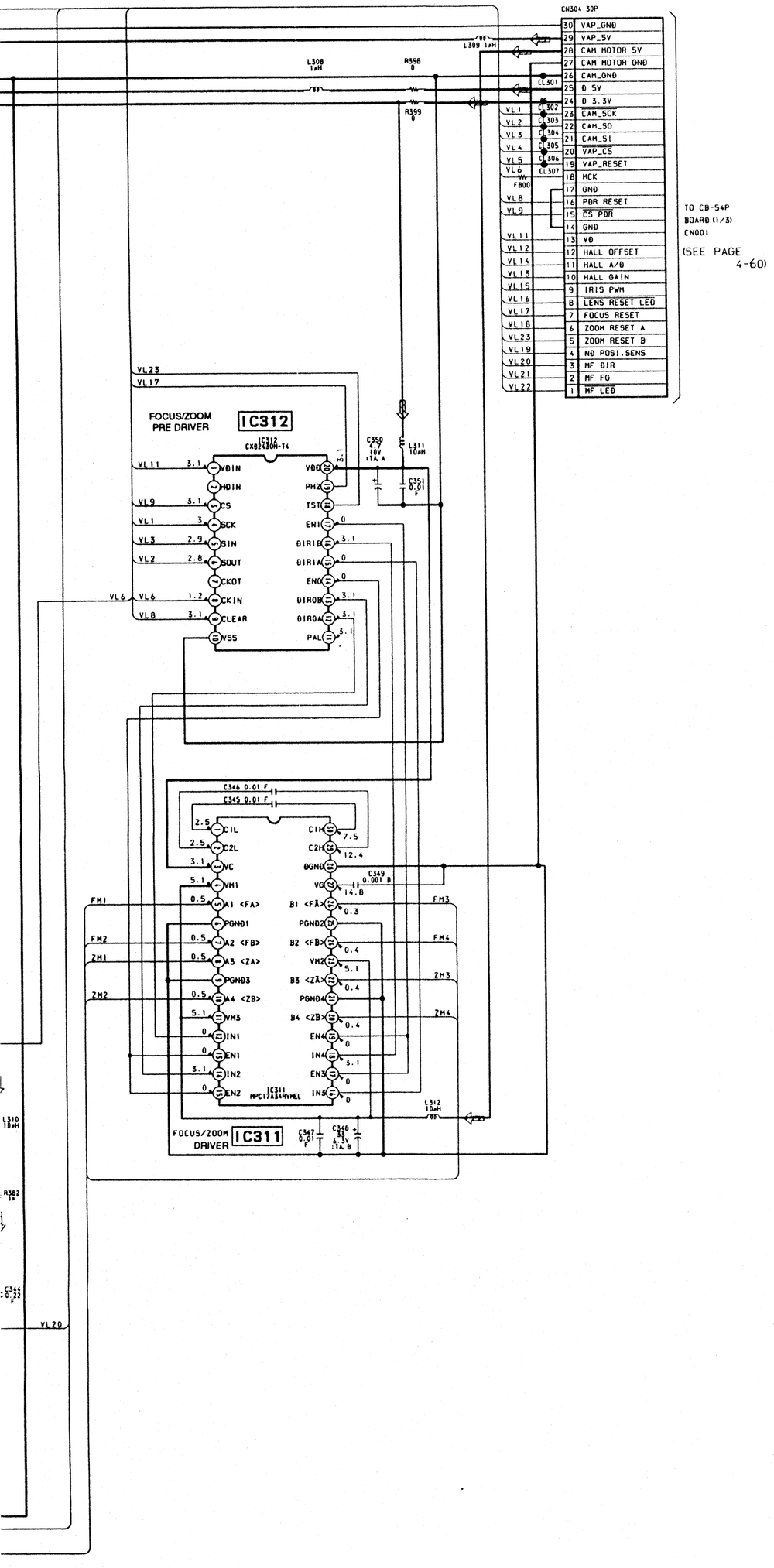

MG-16 (MAGIC) SCHEMATIC DIAGRAM

— Ref.No.MG-16 Board: 7,000 Series —

MG-16 BOARD

NO MARK : CAMERA REC/PB mode
R : CAMERA REC mode
P : PB mode

CN901 48P

MY0	1	F0
MY1	2	F1
MY2	3	F2
MY3	4	F3
MY4	5	F4
MY5	6	F5
MY6	7	F6
MY7	8	F7
ML5	9	G4
MC0	10	G0
MC1	11	G1
MC2	12	G2
MC3	13	G3
MH	14	H0
MV	15	H1
MDE	16	H2
GND	17	
MAGIC 3.3V	18	
GND	19	
MAGIC 3.3V	20	
JUY0	21	Y0
JUY1	22	Y1
JUY2	23	Y2
JUY3	24	Y3
JUY4	25	Y4
JUY5	26	Y5
JUY6	27	Y6
JUY7	28	Y7
JUL5	29	S4
JUC0	30	C0
JUC1	31	C1
JUC2	32	C2
JUC3	33	C3
JUH	34	S1
JUV	35	S0
JUOE	36	S3
NC	37	
NC	38	
RESET FROM MODE	39	M1
MAGIC POWER SAVE	40	M0
CS MAGIC PF	41	M2
CS MAGIC MD	42	M6
CS MAGIC MC	43	M3
HI SCK	44	M4
DATA TO HI	45	M5
DATA FROM HI	46	
GND	47	K0
SPCK 2	48	

TO CB-54P BOARD CN201 (SEE PAGE 4-61)

IC901
IC901
CXD2171R-T6
VQFP
PF MAGIC

IC902
IC902
CXK48324H-1-T6
VQFP
2.4M VRAM

IC903
IC903
CXK1206ATH-1-T6
TSOP
1.2M VRAM

IC904
IC904
CXD2174R-T6
VQFP
MD MAGIC

·SIGNAL PATH

	VIDEO SIGNAL		
	CHROMA	Y	Y/CHROMA
REC	➡	➡	
PB	⇨	⇨	

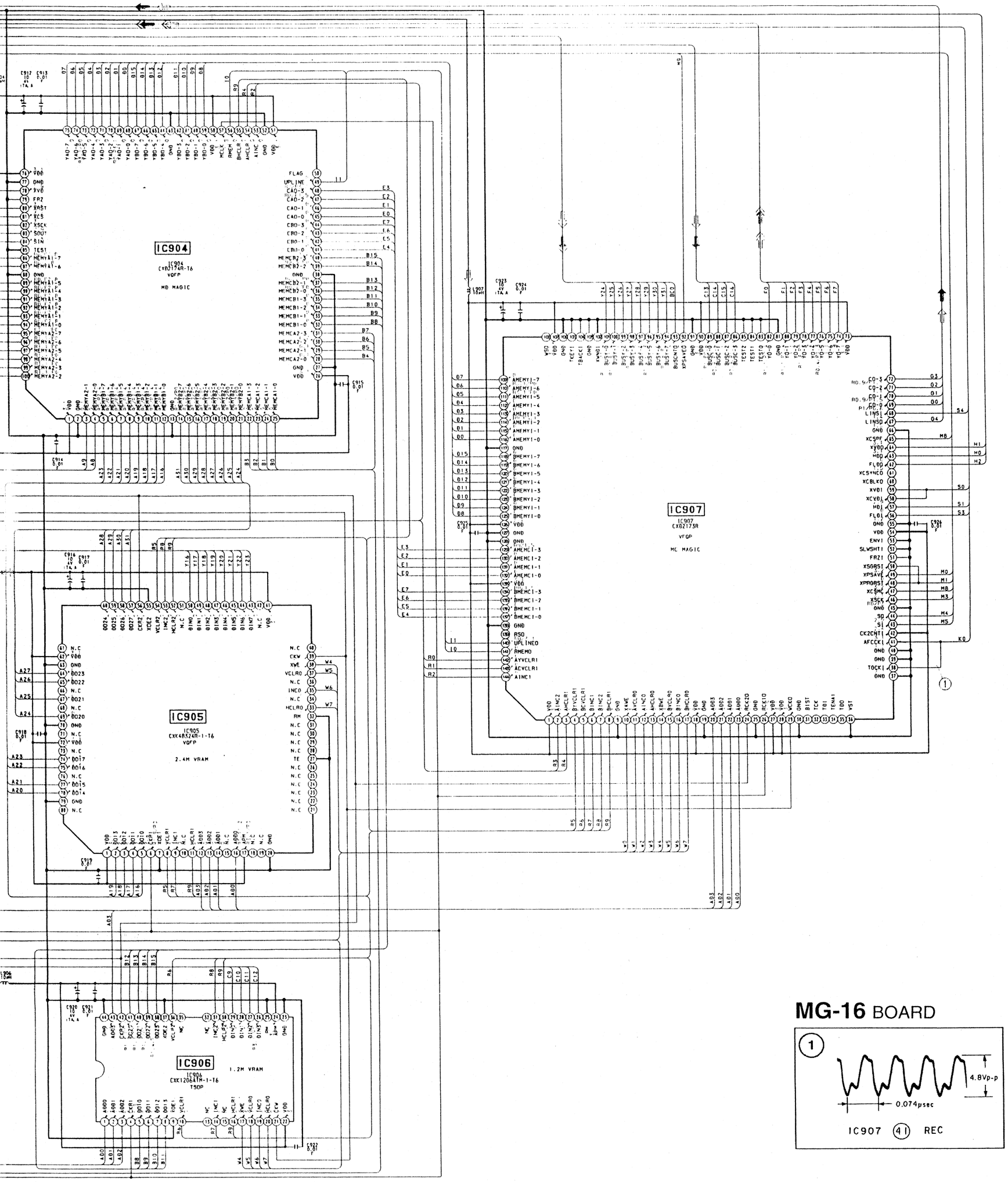
IC904
IC904
CXD2174R-T6
VQFP
MD MAGIC
IC905
IC905
CXK48324R-1-T6
VQFP
2.4M VRAM
IC906
IC906
CXK12064TM-1-T6
TSOP
1.2M VRAM
IC907
IC907
CXD2173R
VFQP
MC MAGIC

MG-16 BOARD

1
4.8Vp-p
0.074μsec
IC907 (41) REC

MG-16 BOARD

C901	B-2
C902	C-2
C903	H-2
C904	B-1
C905	B-7
C906	B-6
C907	B-7
C908	B-7
C909	A-3
C910	A-3
C911	A-3
C912	I-6
C913	H-6
C914	H-7
C915	F-7
C916	C-5
C917	C-5
C918	E-7
C919	D-7
C920	C-4
C921	C-3
C922	D-3
C923	B-4
C924	B-3
C925	F-4
C926	I-4
CN901	B-5
IC901	G-2
IC902	A-7
IC903	A-4
IC904	G-7
IC905	C-7
IC906	D-4
IC907	G-4
L901	B-2
L902	B-6
L903	A-2
L904	I-6
L905	C-5
L906	B-3
L907	B-3
L908	B-6

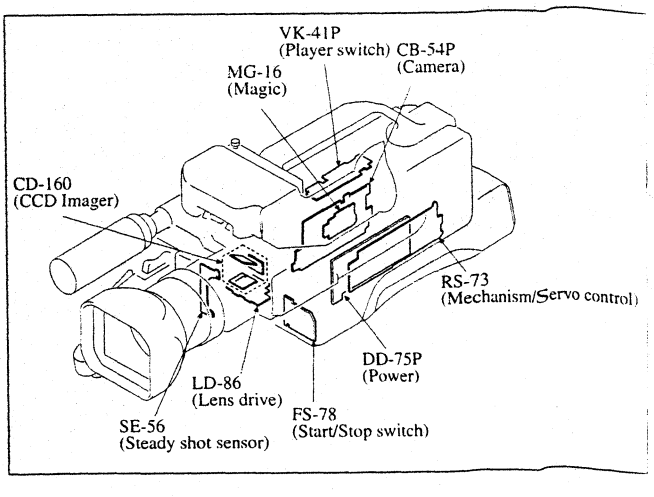

MG-16 (MAGIC) PRINTED WIRING BOARD

— Ref. No. MG-16 Board; 7,000 Series —

There are few cases that the part printed on this diagram isn't mounted in this model.

MG-16 BOARD (SIDE A)

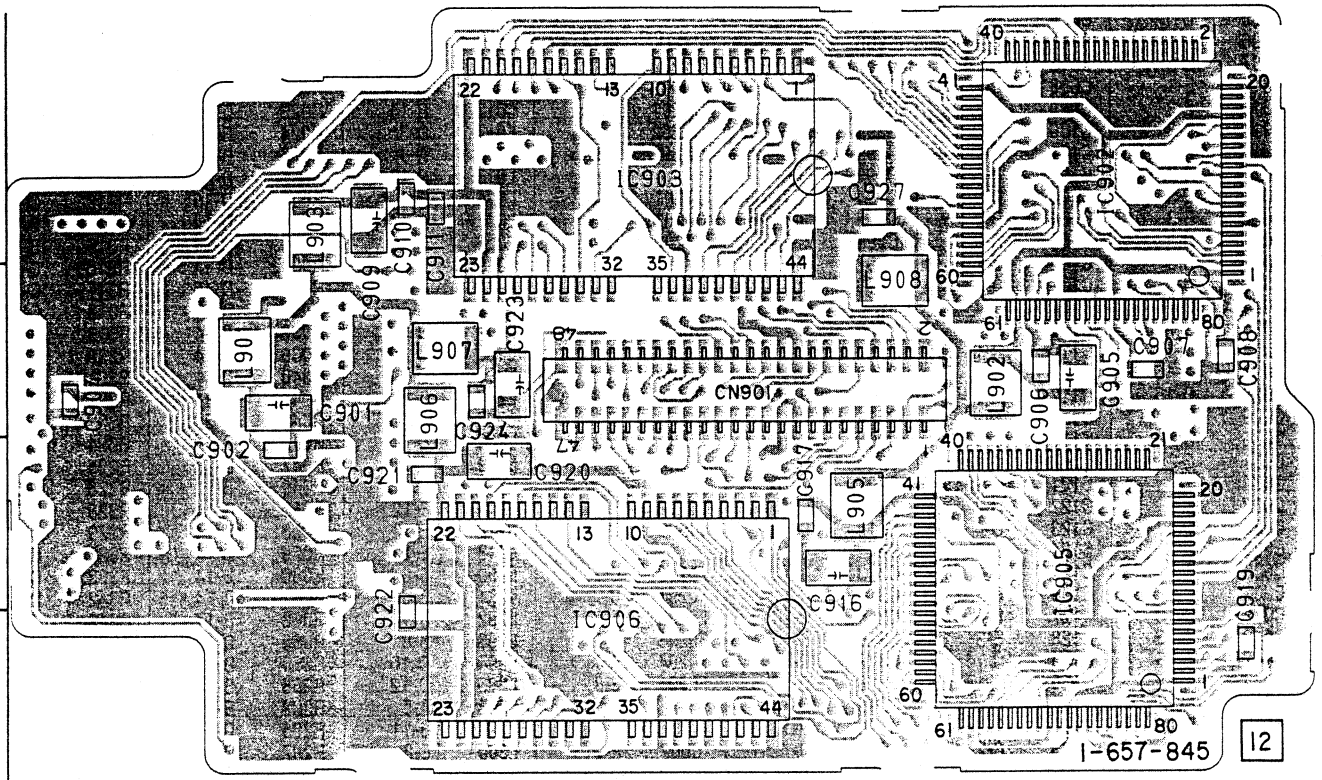

MG-16 BOARD (SIDE B)

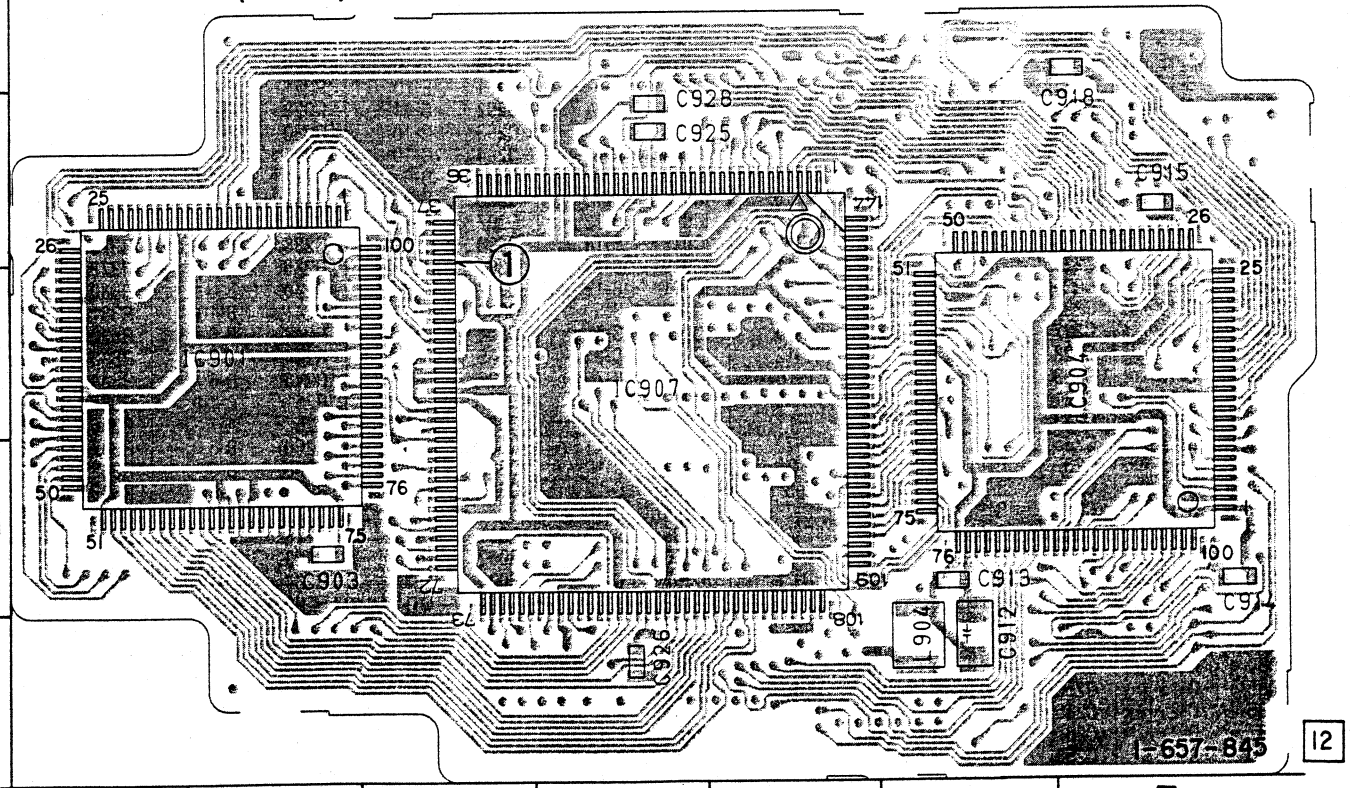

CB-54P BOARD

C001	E-13	C091	B-2	C262	E-11	C365	B-12	L005	E-13	R016	D-13	R300	C-8
C002	E-13	C092	C-2	C263	E-11	C372	C-12	L006	E-4	R017	D-13	R301	C-7
C004	E-12	C093	C-2	C264	E-11	C373	E-8	L007	A-2	R018	D-13	R302	D-7
C005	D-1	C094	B-2	C265	D-12			L008	E-15	R019	D-13	R303	B-10
C006	D-2	C095	C-13	C266	E-12	C-001	E-14	L009	D-1	R020	E-15	R304	B-10
C007	E-3	C096	C-14	C267	E-12	CN002	E-12	L010	D-15	R021	E-15	R305	C-8
C012	E-1	C098	C-3	C268	A-5	CN003	C-2	L011	D-2	R022	D-15	R306	C-7
C013	E-2	C099	D-14	C290	C-7	CN201	D-11	L012	B-14	R023	E-15	R308	B-9
C014	E-3	C100	D-3	C291	B-6	CN202	E-5	L013	D-3	R024	B-2	R309	B-10
C015	E-1	C101	B-14	C292	B-8	CN290	A-9	L014	A-3	R025	B-2	R310	C-11
C016	E-2	C102	B-3	C293	B-6			L015	C-13	R026	B-2	R311	C-10
C017	E-3	C103	D-3	C294	B-7	CT001	D-1	L016	B-4	R028	D-15	R312	C-10
C020	E-3	C104	B-4	C295	B-7	CT201	D-8	L017	A-14	R029	D-14	R314	B-9
C021	D-1	C105	A-3	C296	C-7	CT202	B-7	L018	D-15	R030	D-14	R315	B-10
C022	D-1	C106	C-13	C297	B-8			L019	D-15	R031	D-14	R316	C-10
C023	D-1	C107	B-13	C298	B-11	D001	D-1	L021	E-3	R032	D-16	R317	C-12
C024	E-14	C108	B-4	C299	B-10	D002	D-2	L201	B-6	R037	B-14	R318	C-10
C025	E-14	C109	B-4	C300	C-7	D003	E-3	L202	D-5	R038	B-14	R319	B-10
C026	D-15	C110	C-13	C301	C-12	D004	E-1	L203	D-10	R039	B-14	R320	C-7
C027	D-15	C111	B-4	C302	C-12	D005	E-2	L205	B-7	R040	D-4	R321	C-7
C028	D-15	C112	A-14	C303	B-10	D006	E-3	L206	B-11	R041	B-2	R322	C-11
C029	E-1	C113	B-12	C304	C-11	D007	E-1	L207	E-11	R042	D-2	R323	C-7
C030	E-2	C114	B-14	C305	C-10	D008	E-2	L208	E-11	R043	C-2	R324	C-7
C031	E-2	C117	B-2	C306	C-10	D009	E-3	L209	E-11	R047	B-2	R325	C-11
C032	E-2	C121	D-15	C307	C-10	D201	D-8	L210	E-11	R049	B-2	R326	D-7
C033	E-3	C122	D-4	C309	C-10	D202	B-10	L211	E-12	R056	A-14	R328	D-7
C034	E-3	C123	D-4	C310	C-10	D297	C-11	L212	E-12	R058	B-14	R329	D-7
C035	E-2	C124	D-4	C311	C-10			L213	E-12	R059	B-14	R330	C-10
C036	E-2	C125	D-2	C313	C-10	FL290	C-7	L290	B-8	R060	B-14	R332	C-10
C037	E-3	C126	E-3	C314	C-11	FL291	C-7	L291	B-6	R062	B-14	R342	D-10
C038	D-13	C127	D-3	C315	C-10	FL292	C-7	L292	B-11	R063	B-14	R343	C-10
C040	B-15	C128	B-3	C316	C-10	FL293	C-7	L293	B-8	R065	B-15	R344	C-10
C042	B-15	C129	C-14	C317	C-10	FL294	D-7	L294	D-10	R066	B-15	R345	D-10
C044	A-15	C130	C-14	C318	D-11	FL295	E-8	L295	D-12	R068	B-15	R346	D-10
C045	E-15	C131	B-2	C319	D-10			L298	A-5	R202	B-12	R347	A-12
C046	E-15	C132	D-2	C320	D-10	IC001	D-14	L299	B-11	R205	D-9	R348	A-12
C047	B-2	C133	C-2	C321	D-7	IC002	E-1	L300	E-8	R207	D-8	R349	A-12
C048	C-15	C199	D-3	C322	D-7	IC003	E-2	L301	E-11	R208	C-8	R352	C-10
C049	C-15	C203	C-12	C323	D-10	IC004	E-3	L302	B-12	R209	C-8	R354	C-11
C050	D-16	C204	B-6	C325	D-7	IC005	B-15			R212	D-8	R361	D-11
C051	C-15	C205	B-6	C326	D-11	IC006	D-15	Q001	D-1	R214	D-9	R362	D-10
C052	D-16	C206	C-5	C327	D-11	IC007	D-4	Q002	D-1	R215	C-9	R364	D-11
C053	C-15	C208	D-5	C328	D-7	IC008	C-14	Q003	D-1	R216	D-9	R365	D-10
C054	C-15	C209	D-10	C329	B-12	IC009	C-3	Q011	D-2	R219	C-10	R367	E-10
C055	C-15	C210	D-5	C330	A-4	IC010	D-3	Q290	E-10	R220	B-10	R368	D-7
C056	B-15	C211	D-9	C331	D-11	IC011	B-3	Q291	E-10	R221	B-10	R369	D-7
C057	A-2	C213	D-9	C332	D-10	IC012	A-3	Q292	C-11	R228	D-4	R372	C-11
C058	A-2	C214	D-9	C333	D-10	IC013	C-4	Q293	C-10	R230	B-11	R373	A-8
C059	B-14	C215	D-9	C334	D-11	IC014	D-4	Q294	C-10	R231	B-11	R374	C-11
C060	D-16	C216	C-8	C335	D-10	IC015	D-3	Q295	B-9	R232	B-10	R375	D-7
C061	D-15	C217	D-8	C336	D-10	IC016	C-13	Q296	B-9	R233	B-6	R376	E-7
C062	D-15	C218	C-8	C337	B-12	IC017	B-13	Q297	B-10	R235	B-6	R377	E-7
C063	D-16	C219	C-9	C338	C-12	IC018	B-14	Q298	C-11	R236	B-6	R378	E-7
C064	A-15	C221	D-9	C339	B-11	IC019	B-14	Q301	A-8	R239	B-6	R379	D-11
C066	B-2	C225	C-9	C340	D-11	IC201	B-12	Q302	D-7	R240	B-6	R380	D-11
C067	C-14	C226	D-7	C341	D-10	IC202	B-5	Q303	D-11	R241	B-10	R381	D-11
C068	C-15	C227	D-10	C342	E-10	IC203	C-5	Q304	E-9	R242	B-6	R382	D-11
C069	C-14	C228	D-7	C343	C-12	IC204	D-8	Q305	E-8	R244	B-10	R383	E-7
C070	D-15	C229	C-5	C344	E-10	IC205	B-7	Q306	E-9	R245	B-6	R384	E-7
C071	B-14	C231	B-7	C345	D-10	IC207	B-11	Q307	E-9	R251	B-10	R385	E-6
C072	B-14	C233	B-11	C347	E-11	IC290	C-7	Q308	C-11	R257	A-7	R386	E-6
C073	B-14	C235	B-11	C348	D-7	IC291	C-11	Q309	C-11	R260	B-5	R387	E-6
C075	D-15	C237	B-11	C349	E-8	IC292	C-10	Q312	D-7	R266	B-5	R388	C-11
C076	D-16	C238	B-11	C350	D-8	IC293	C-12	Q313	D-7	R268	B-6	R389	C-11
C077	C-15	C244	B-10	C351	D-7	IC294	D-10			R272	A-7	R390	E-9
C078	C-15	C245	B-10	C352	E-7	IC295	A-12	R001	E-1	R278	A-7	R391	E-10
C079	C-15	C246	A-10	C353	E-8	IC296	B-11	R002	D-2	R283	D-12	R392	E-10
C080	C-14	C247	B-10	C354	D-7	IC297	C-11	R003	D-3	R284	D-12	R393	E-10
C081	D-4	C248	B-10	C355	E-7	IC298	C-11	R004	D-1	R290	E-10	R394	E-9
C082	D-4	C249	B-11	C356	E-7	IC299	E-10	R005	D-2	R291	E-10	R395	C-10
C083	D-4	C250	B-11	C357	E-7	IC300	D-6	R006	D-3	R292	E-10		
C084	C-15	C251	A-11	C358	D-11	IC301	D-7	R007	D-1	R293	B-10	X001	D-13
C085	C-15	C253	C-6	C359	E-6	IC302	C-11	R008	D-1	R294	B-10	X002	D-16
C086	D-2	C255	A-7	C360	E-6			R009	D-1	R295	B-10	X201	D-9
C087	B-2	C257	C-5	C361	E-7	L001	E-13	R010	D-2	R296	C-7		
C088	C-2	C258	B-11	C362	D-11	L002	E-13	R011	D-1	R297	B-7		
C089	C-2	C259	B-11	C363	E-7	L003	E-13	R012	D-1	R298	C-8		
C090	C-2	C261	E-11	C364	E-11	L004	E-12	R013	D-1	R299	C-8		

LOCATION
CB-54P

CB-54P (CAMERA) PRINTED WIRING BOARD
— Ref. No. CB-54P Board; 1,000 Series —

There are few cases that the part printed on this diagram isn't mounted in this model.

CB-54P BOARD (SIDE A)

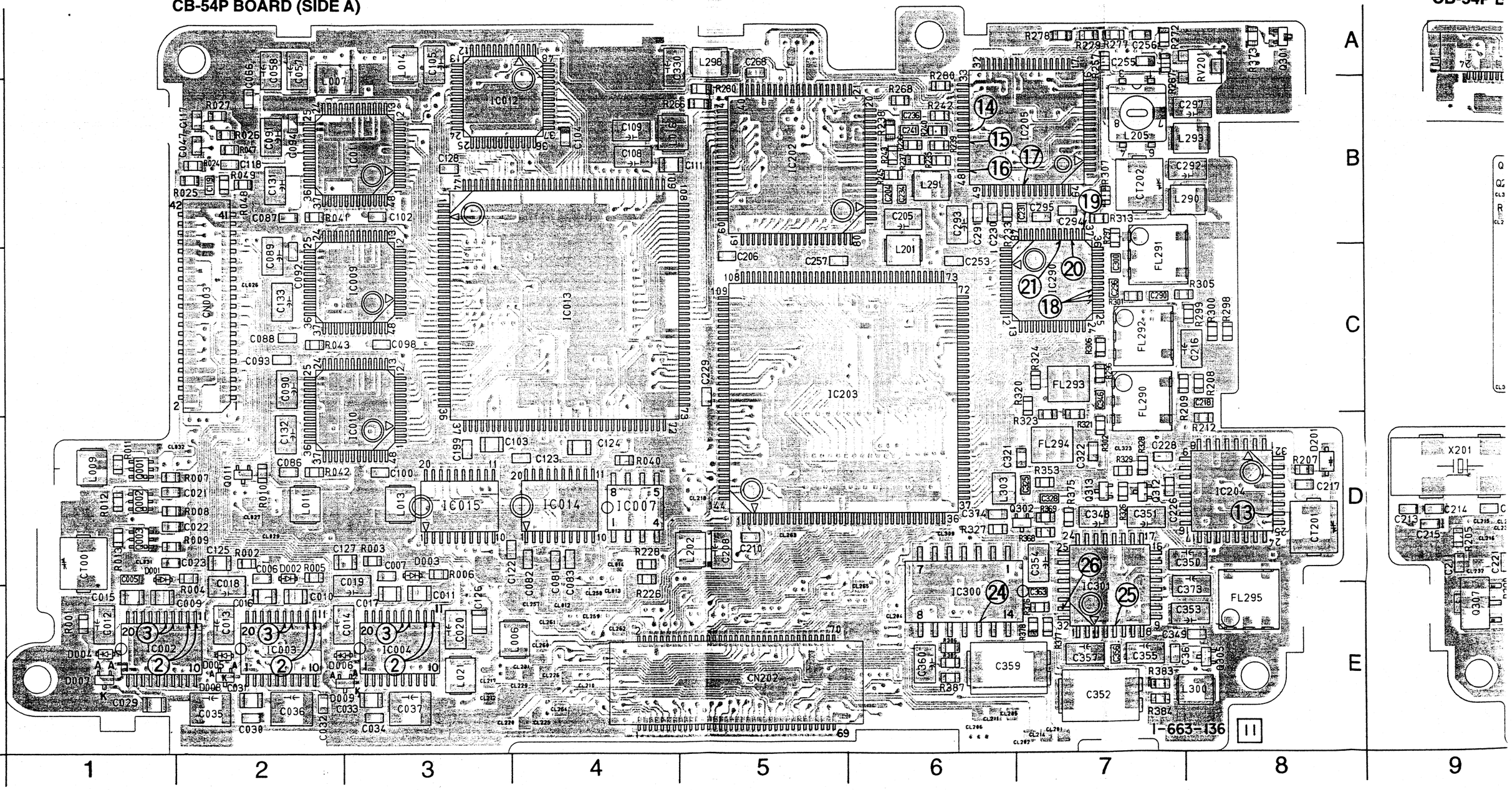

CB-54P B

CB-54P BOARD (SIDE B)

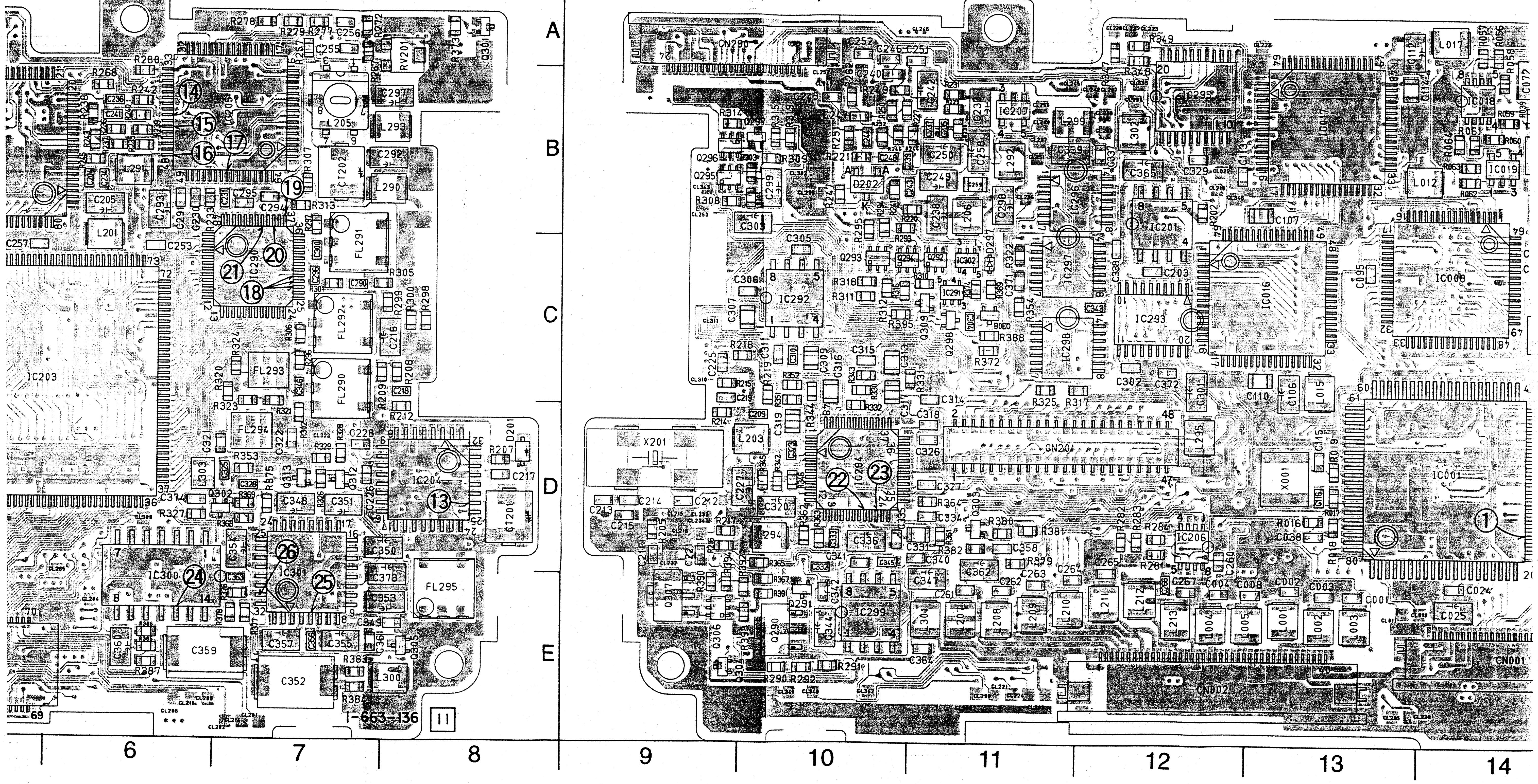

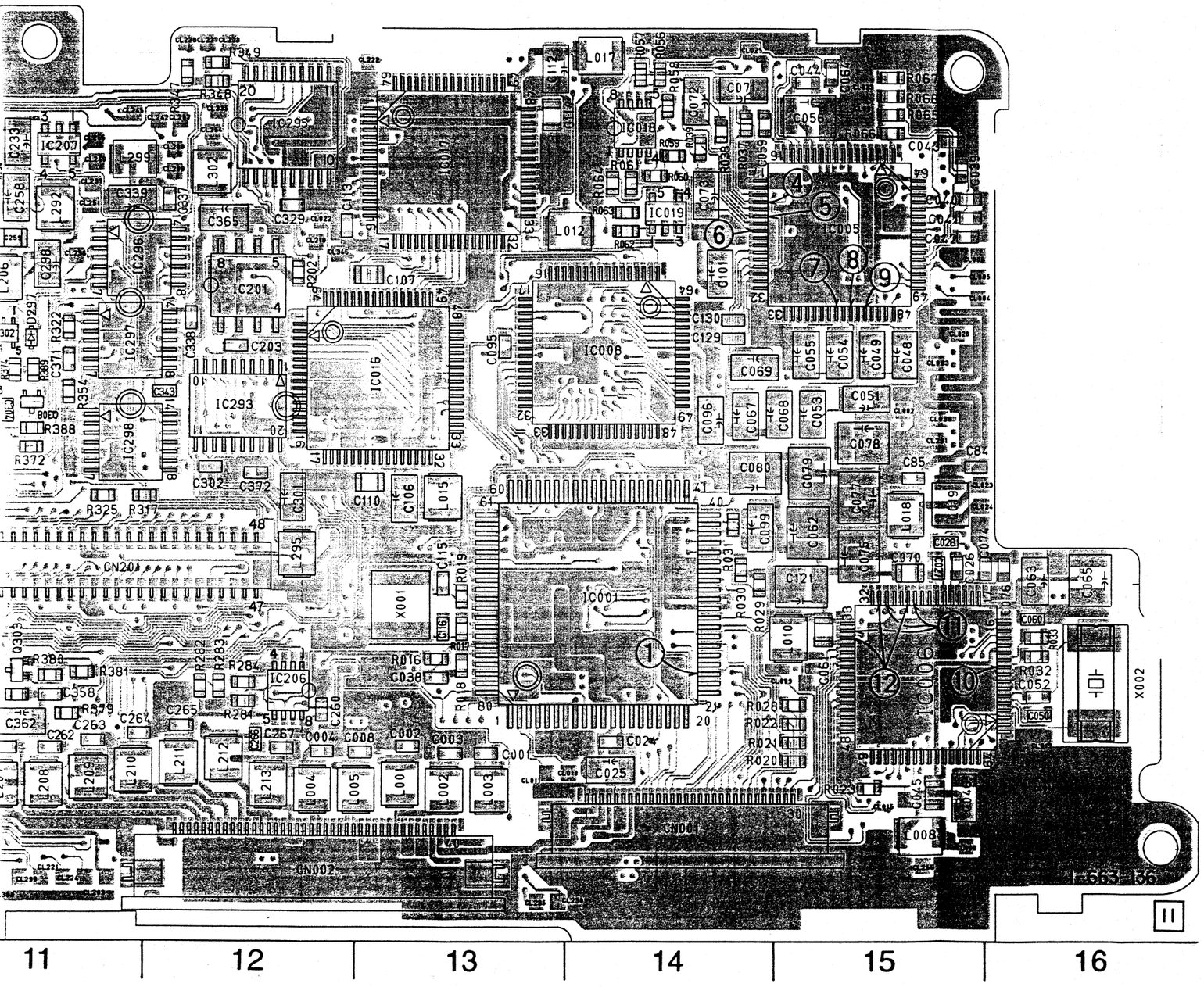
11
12
13
14
15
16

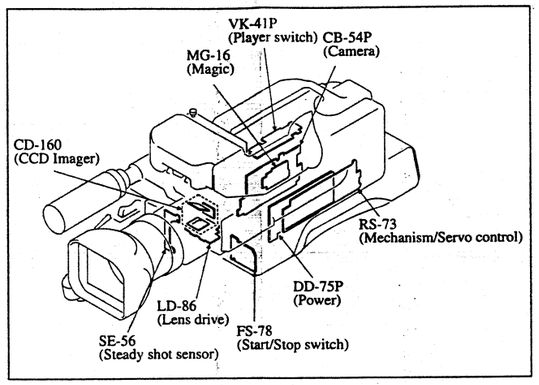
VK-41P
(Player switch)
CB-54P
(Camera)
MG-16
(Magic)
CD-160
(CCD Imager)
RS-73
(Mechanism/Servo control)
DD-75P
(Power)
LD-86
(Lens drive)
FS-78
(Start/Stop switch)
SE-56
(Steady shot sensor)

CB-54P (CAMERA) SCHEMATIC DIAGRAM

— Ref.No.CB-54P Board; 1,000 Series—

• See page 4-51 for CB-54P BOARD printed wiring board.

CB-54P BOARD (1/3)

no mark : CAMERA REC mode
* : Can not be measured.

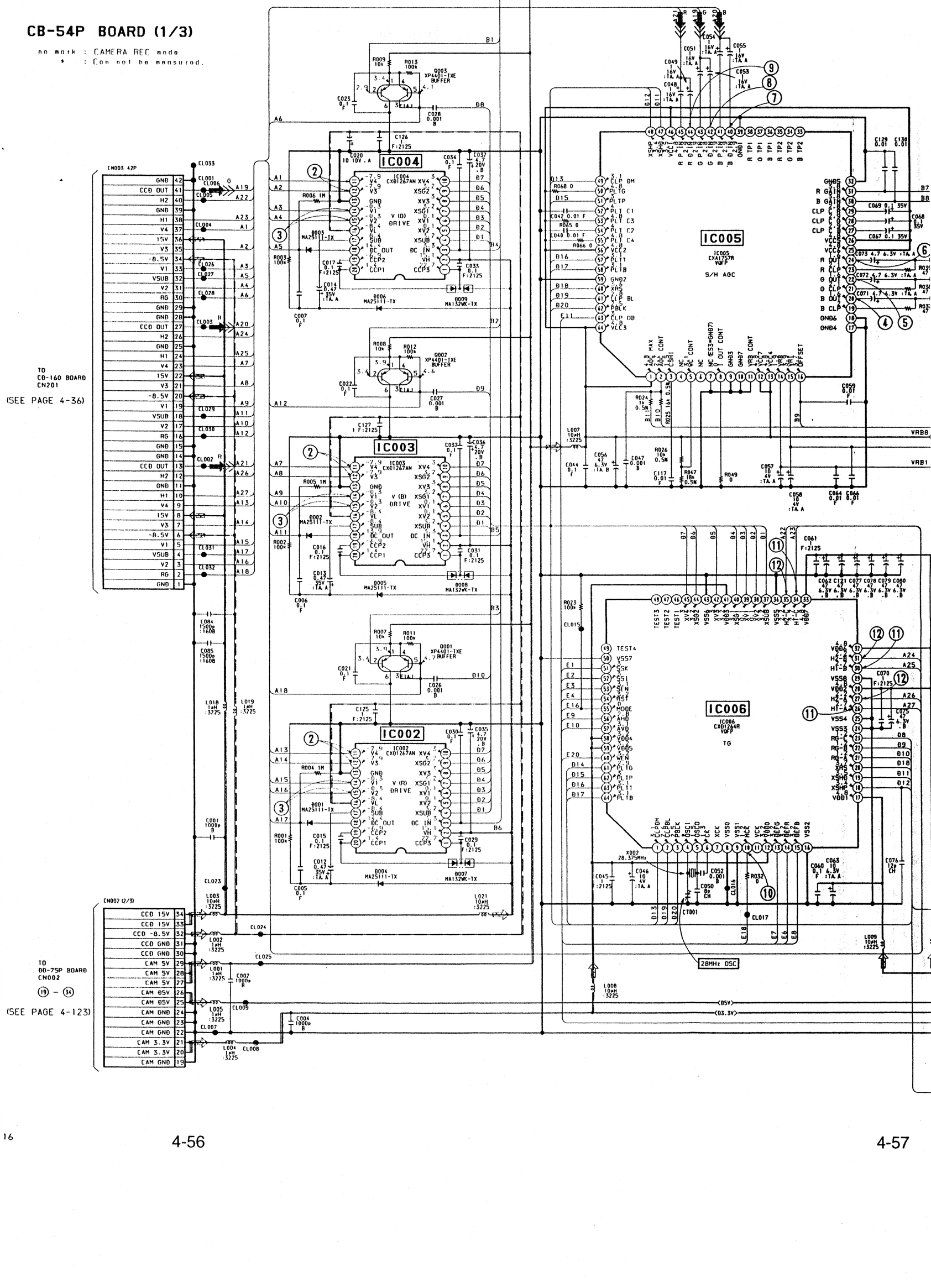

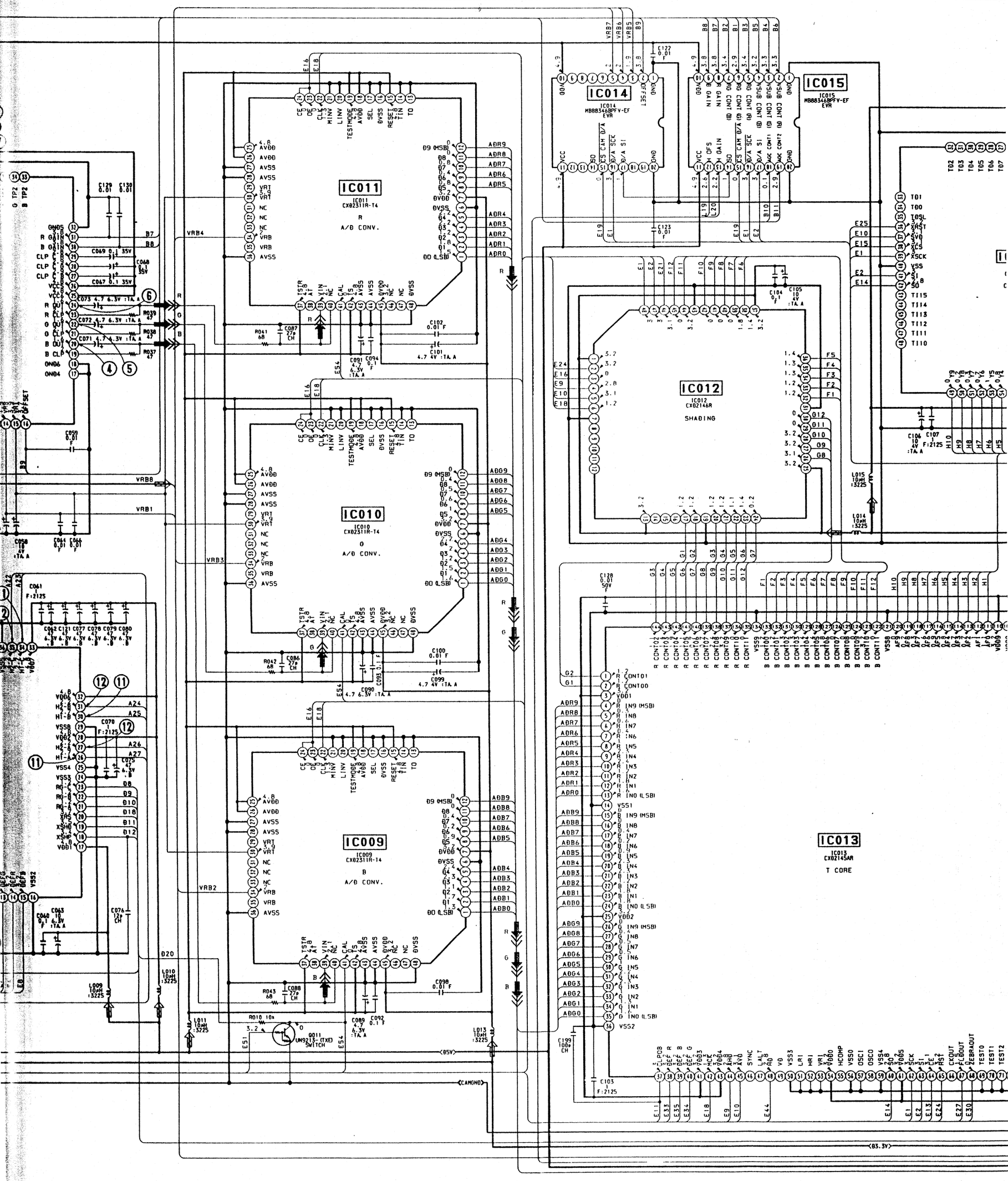
IC011
CX02311R-T4
R
A/D CONV.
IC010
CX02311R-T4
G
A/D CONV.
IC009
CX02311R-T4
B
A/D CONV.
IC012
CX02146R
SHADING
IC013
CX02145AR
T CORE
IC014
MB88346BPFV-EF
EVR
IC015
MB88346BPFV-EF
EVR
VRB4
VRB3
VRB2
VRB1
VRB8
ADR9
ADR8
ADR7
ADR6
ADR5
ADR4
ADR3
ADR2
ADR1
ADR0
ADG9
ADG8
ADG7
ADG6
ADG5
ADG4
ADG3
ADG2
ADG1
ADG0
ADB9
ADB8
ADB7
ADB6
ADB5
ADB4
ADB3
ADB2
ADB1
ADB0
<5V>
<CAMGND>
<3.3V>

IC016
IC016
CXD2147R
OPD VC

IC017
IC017
CXD2150R
OPD AF

IC007
IC007
AK6440MF-E2
EEP ROM

IC008
IC008
CXD2417AR-T6
Z-3

IC018 IC019
A/D CONVERTER

IC018
TA75W01FU-TE12R

IC019
TA75S01F (TE85L)

1
TO CB-54P BOARD (2/3)
(SEE PAGE 4-61)

·SIGNAL PATH

	VIDEO SIGNAL		
	CHROMA	Y	Y/CHROMA
REC	➡	➡➡	➡➡➡
PB			

J0 J1 J2 J3 J4 J5 J6 J7 J8 → 1-17, 1-1, 1-2, 1-3, 1-4, 1-5, 1-6, 1-7, 1-8

J9 J10 J11 J12 J13 J14 J15 J16 → 1-9, 1-10, 1-11, 1-12, 1-13, 1-14, 1-15, 1-16

E18 → 1-18
E44 → 1-19
E27 → 1-20
CAM GND

E40 → 1-21
E39 → 1-22
E41 → 1-23
E38 → 1-24
E42 → 1-25
E43 → 1-26
E30 → 1-27
E20 → 1-28

(1) TO CB-54P BOARD (2/3) (SEE PAGE 4-61)

·SIGNAL PATH

	VIDEO SIGNAL		
	CHROMA	Y	Y/CHROMA
REC	→	⇒	⇛
PB			

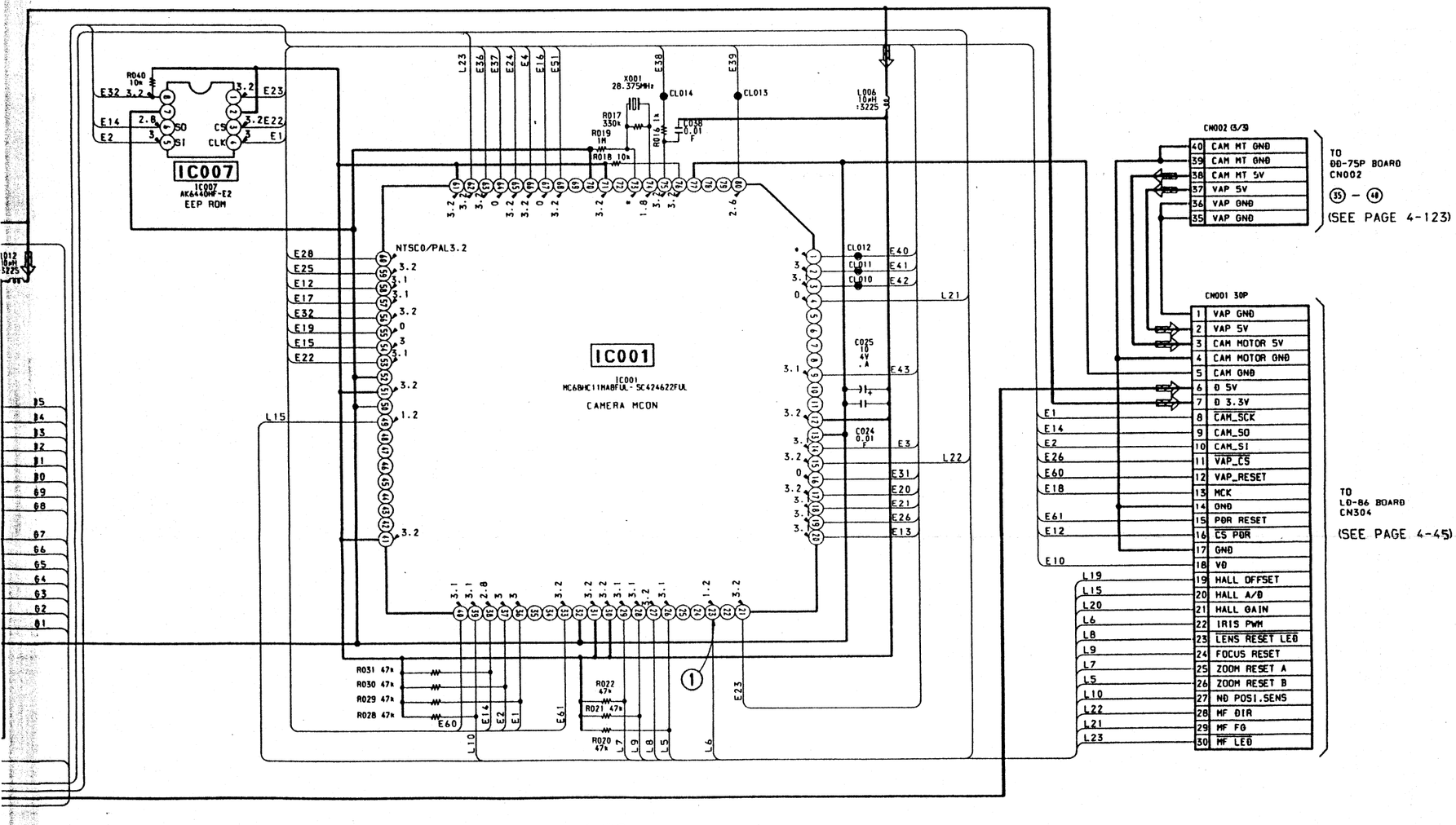

CB-54P BOARD (1/3) (CAMERA REC)

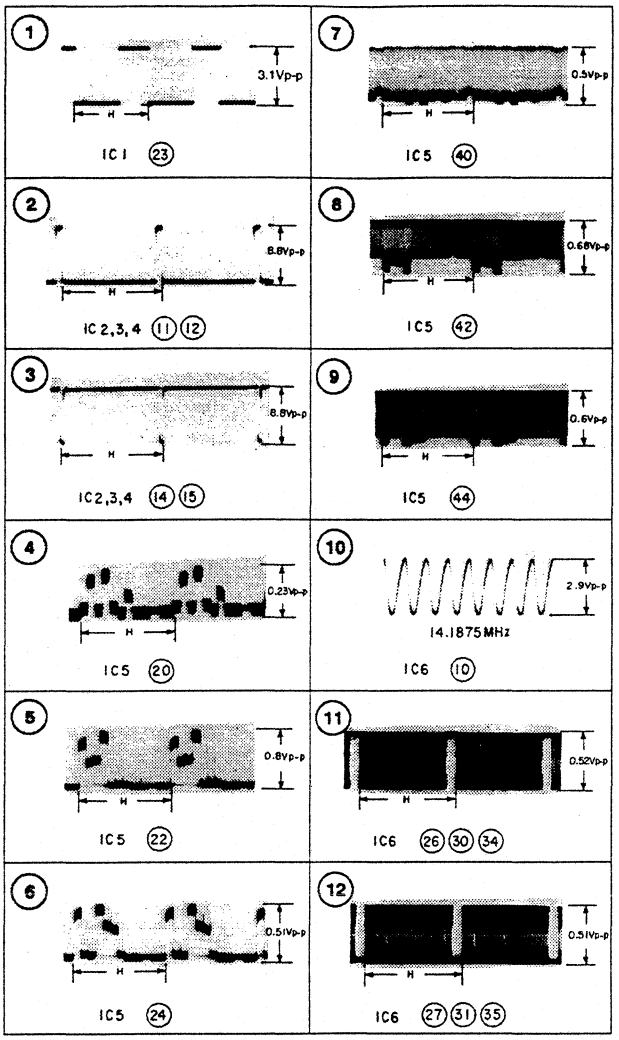

CB-54P BOARD (2/3)
(CAMERA REC/PB)

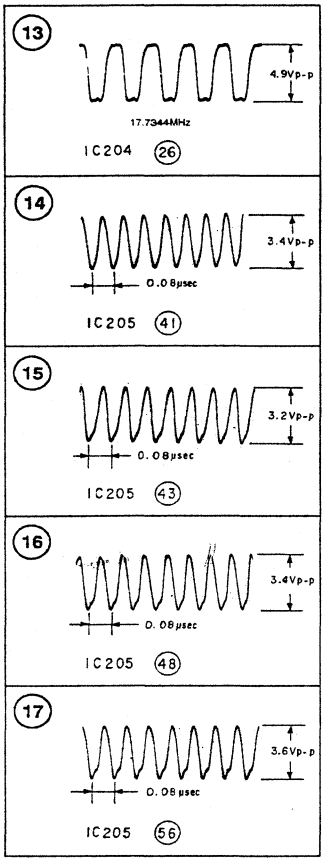

CB-54P (BASE BAND) SCHEMATIC DIAGRAM

• See page 4-51 for CB-54P BOARD printed wiring board.

— Ref.No.CB-54P Board: 1,000 Series—

CB-54P BOARD (2/3)

no mark : CAMERA REC/PB mode
R : CAMERA REC mode
P : PB mode
* : Can not be measured.

(SEE PAGE 4-123)
TO DD-75 BOARD CN002 ① – ⑱

(SEE PAGE 4-46)
TO MG-16 BOARD CN901

② TO CB-54P BOARD (3/3) (SEE PAGE 4-65)

⑤ TO CB-54P BOARD (3/3) (SEE PAGE 4-65)

③ TO CB-54P BOARD (3/3) (SEE PAGE 4-64)

① TO CB-54P BOARD (1/3) (SEE PAGE 4-59)

IC201 IK6420MF EEP ROM

IC202 CXD2181R-T6 5ARA

IC203 CXD2182Q JUST

IC204 CXD2192Q-T4 NP5

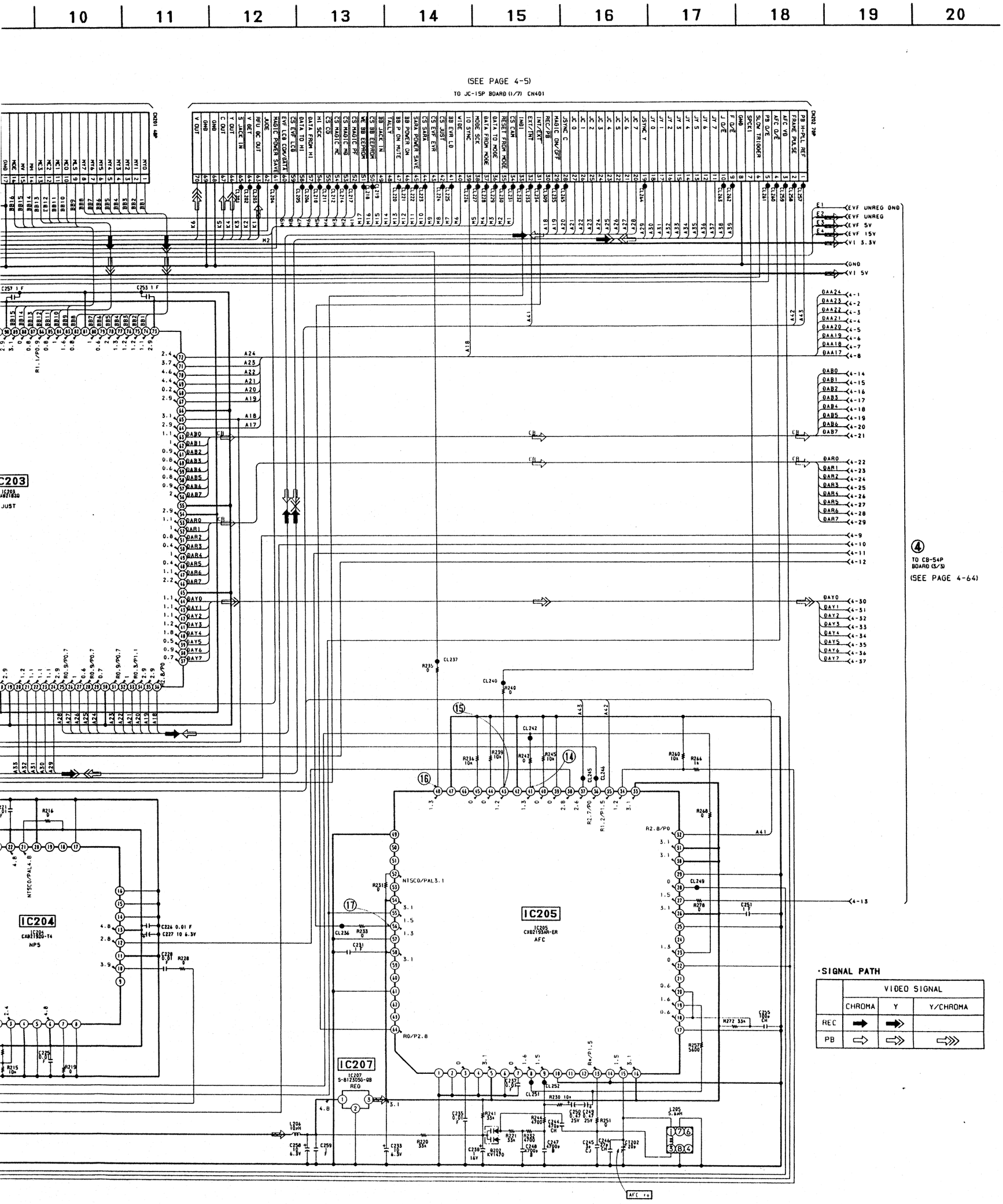

·SIGNAL PATH

	VIDEO SIGNAL		
	CHROMA	Y	Y/CHROMA
REC	➡	➡⟫	
PB	⇨	⇨⟫	⇨⟫⟫

CB-54P (VIDEO OUTPUT) SCHEMATIC DIAGRAM

·See page 4-51 for CB-54P BOARD printed wiring board.

— Ref.No.CB-54P Board: 1,000 Series —

CB-54P BOARD (3/3)

no mark : REC/PB mode
R : REC mode
P : PB mode
* : Can not be measured. Measure in a state of connecting the plug into SJ VIDEO

IC291 SWITCH
IC302 SWITCH
IC294 CXA1582R-T4 ENCODER
IC290 CXD2304R-T4 D/A CONVERTER
IC292 CXA2111R-T4 VCA
IC293 MB88346BPFV-EF EVR D/A
Q292-294 BUFFER
Q298, 308 BUFFER
Q290, 291 SWITCH REG

VI 5V
GND
VI 3.3V
EVF UNREG GND
EVF UNREG
EVF 15V
EVF 5V

·SIGNAL PATH

	VIDEO SIGNAL		
	CHROMA	Y	Y/CHROMA
REC			
PB			

④ TO CB-54P BOARD (2/3) (SEE PAGE 4-62)
③ TO CB-54P BOARD (2/3) (SEE PAGE 4-61)

IDEO OUTPUT
CB-54P (3/3)

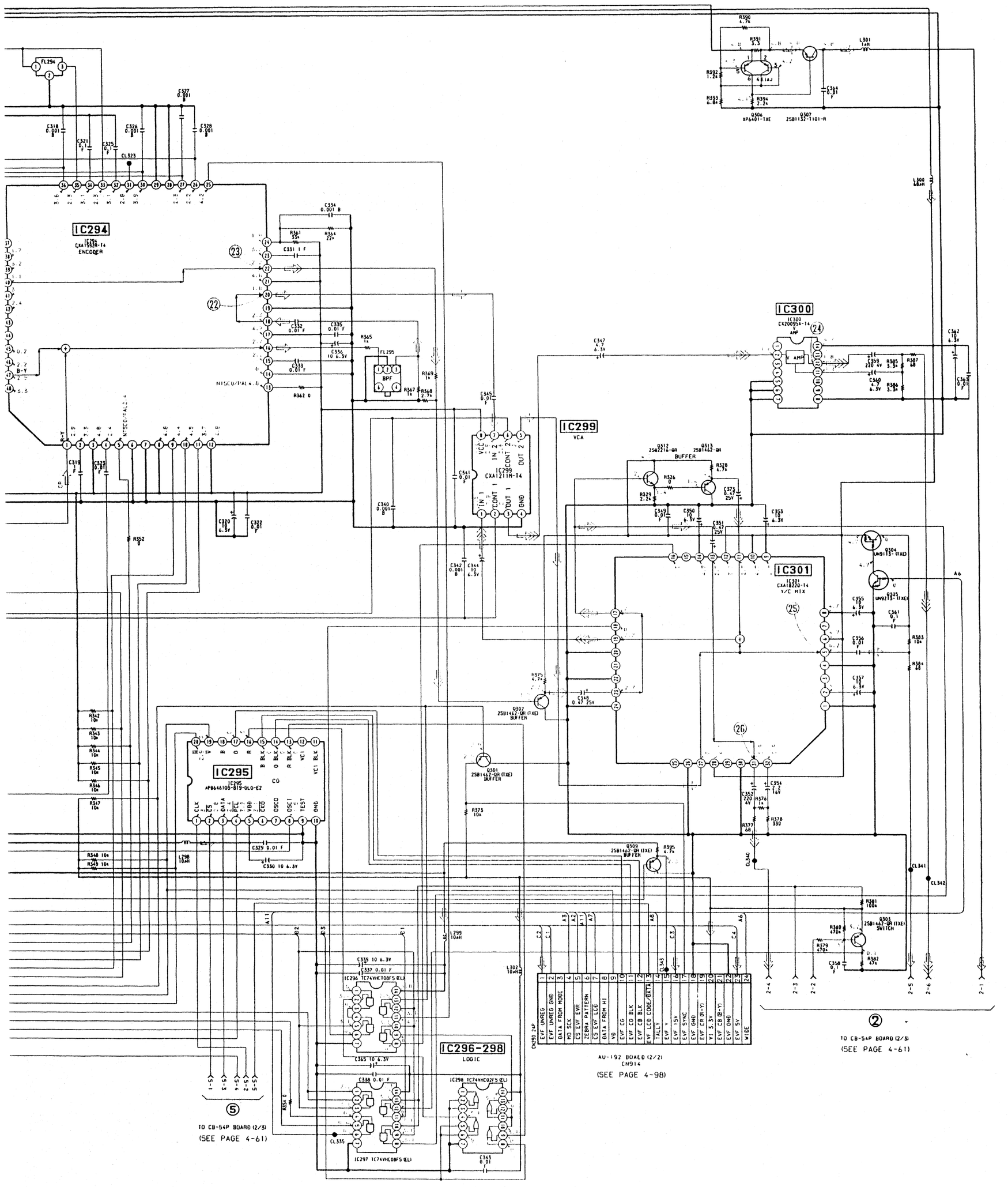
10
11
12
13
14
15
16
17
18
19
20
IC294
IC300
IC299
IC301
IC295
IC296-298
LOGIC
BUFFER
TO CB-54P BOARD (2/3)
(SEE PAGE 4-61)
AU-192 BOAED (2/2)
CN914
(SEE PAGE 4-98)
TO CB-54P BOARD (2/3)
(SEE PAGE 4-61)

CB-54P BOARD (3/3)

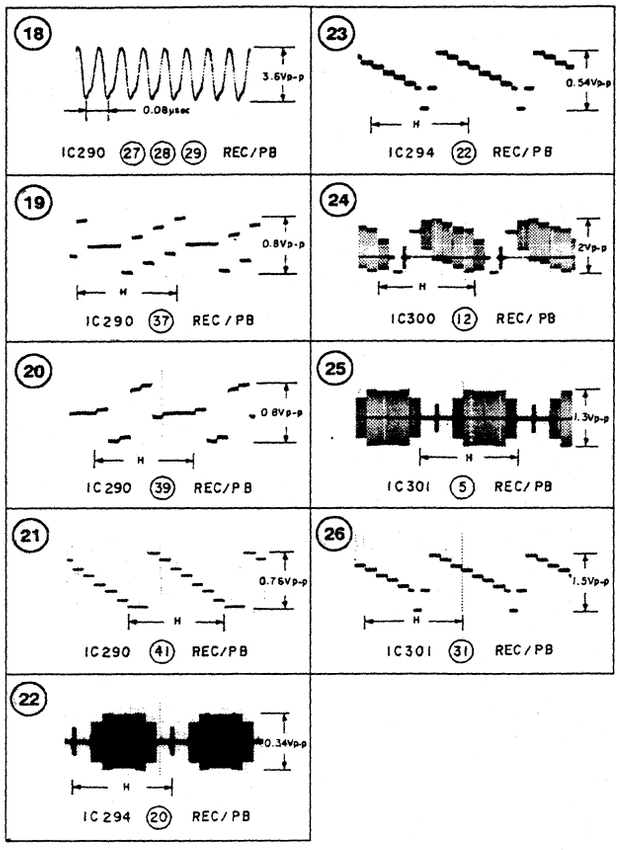

RS-73 BOARD (1/2)

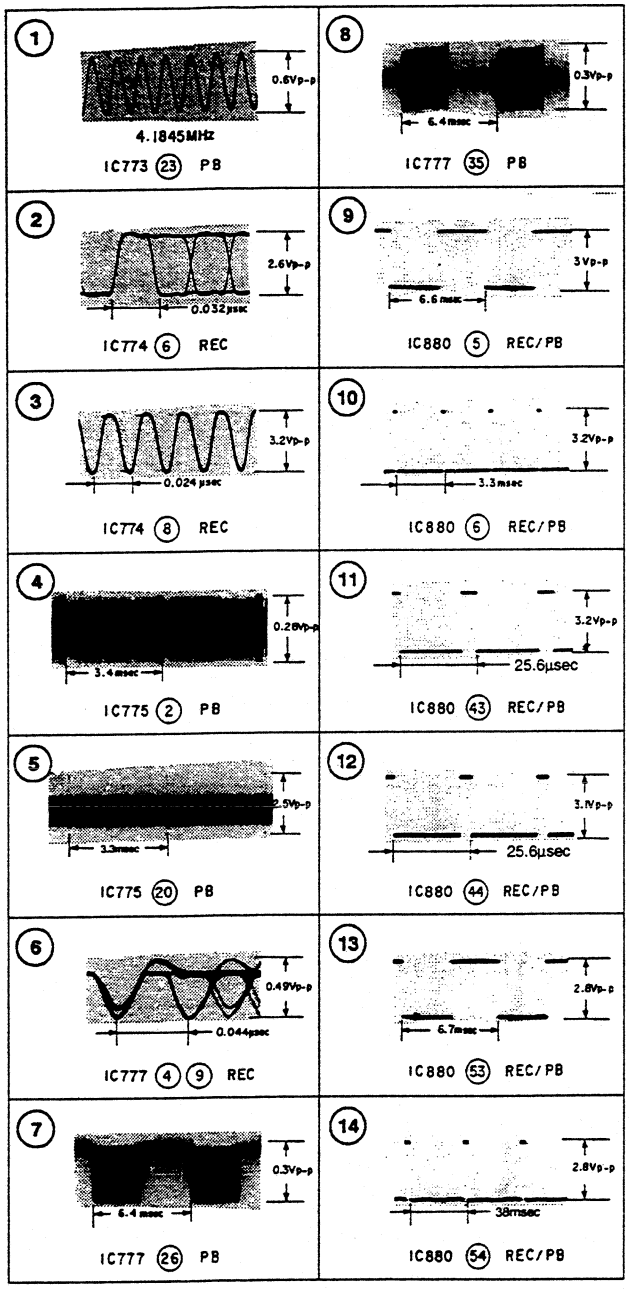

RS-73 (MECHANISM CONTROL) SCHEMATIC DIAGRAM

• See page 4-77 for RS-73 BOARD printed wiring board.

— Ref.No.RS-73 Board: 1,000 Series —

RS-73 BOARD (1/2)

no mark : REC/PB mode
R : REC mode
P : PB mode
* : Can not be measured

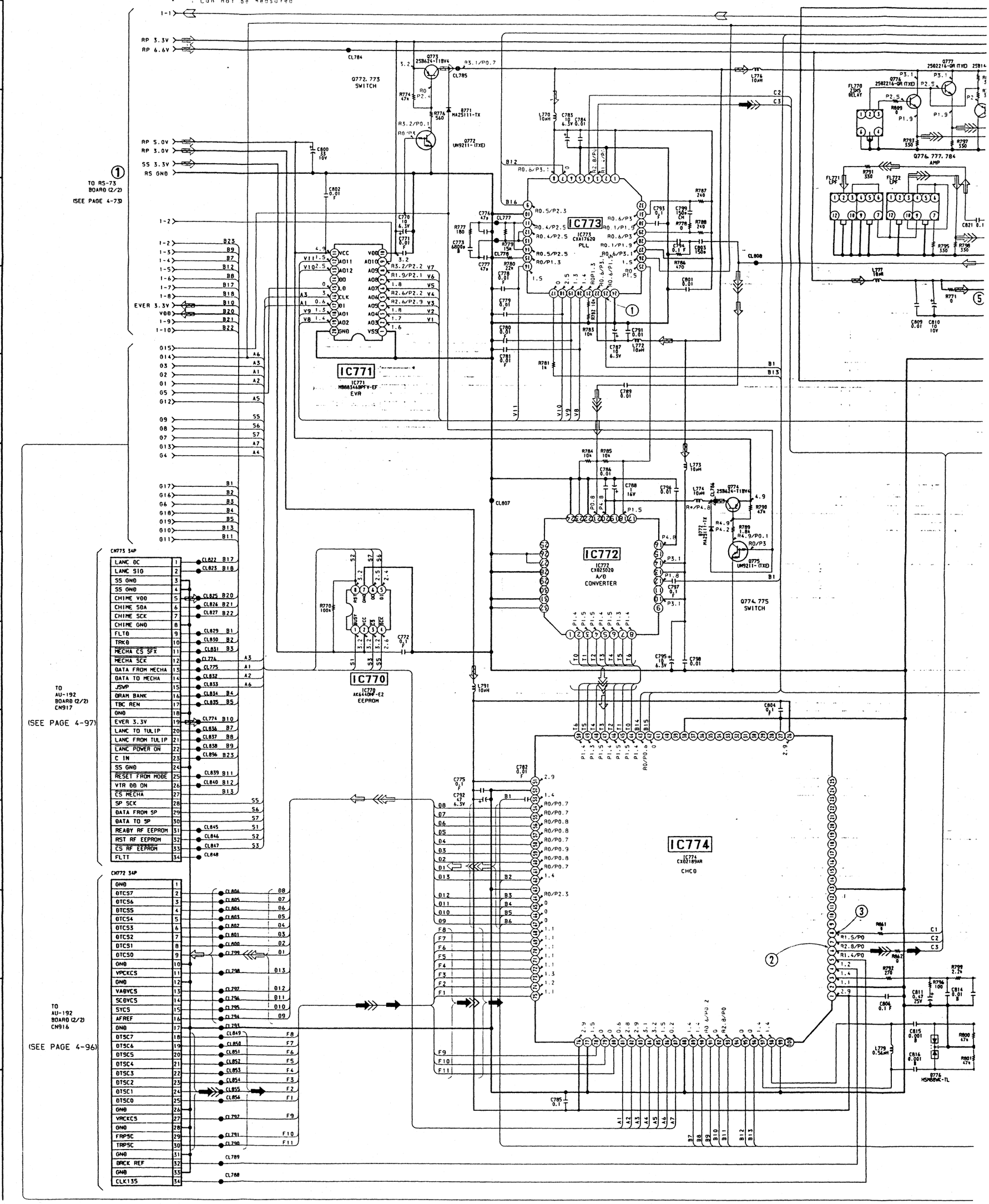

RS-73 BOARD printed wiring board.

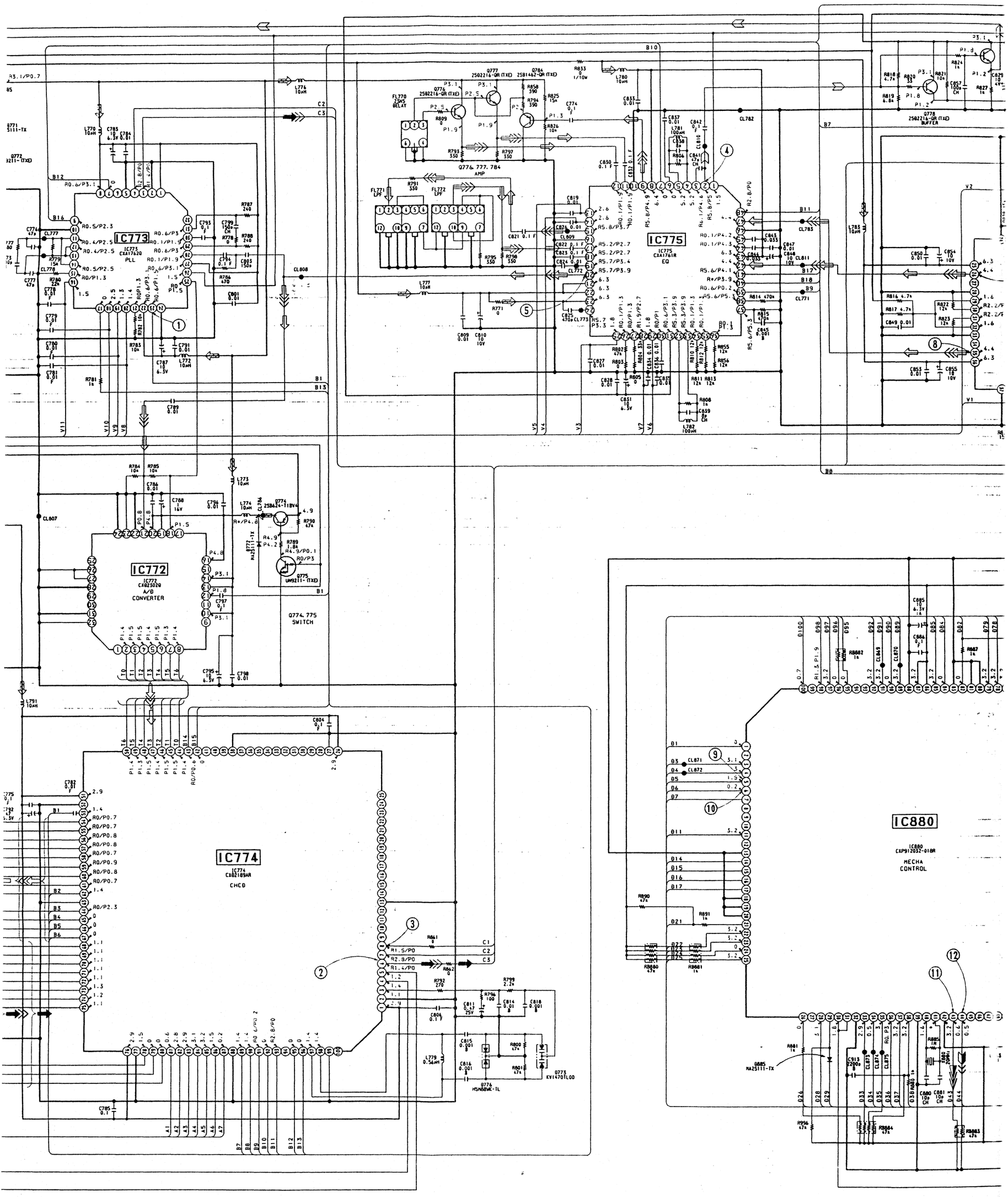

14 | 15 | 16 | 17 | 18 | 19 | 20 | 21 | 22 | 23 | 24

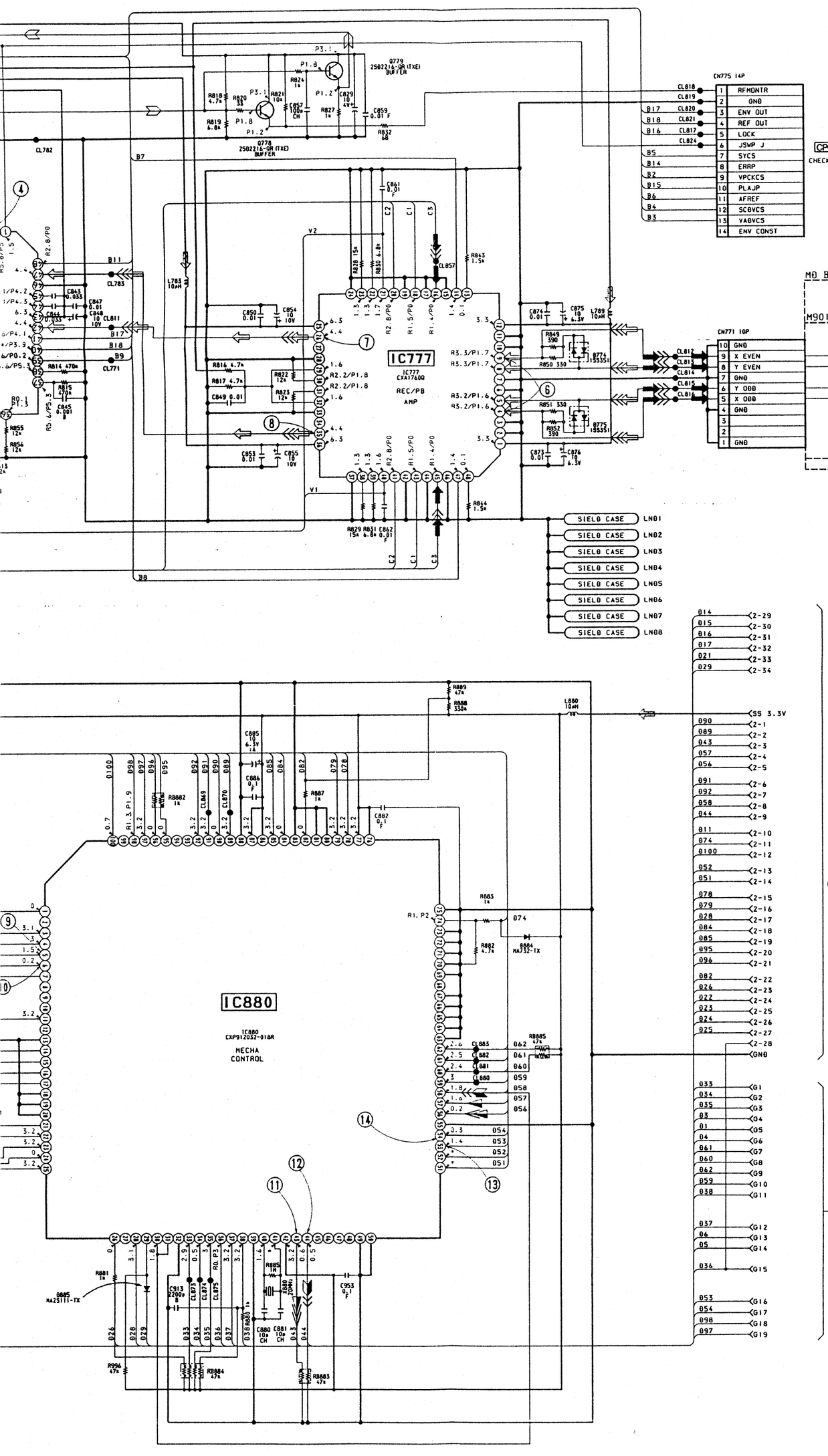

·SIGNAL PATH

	REC	REC/PB	PB
Drum speed servo		➤	
Drum phase servo		➤➤	
Drum servo (speed and phase)		➤➤➤	
Capstan servo (speed and phase)		➤➤»	
Ref. signal			▷

	VIDEO SIGNAL			AUDIO
	CHROMA	Y	Y/CHROMA	SIGNAL
REC			➤➤➤	➤
PB			▷➤➤	▷

RS-73 (SERVO CONTROL), MD-70 (TAPE SENSOR) SCHEMATIC DIAGRAMS

— Ref.No.RS-73 Board: 1,000 Series, MD-70 Board: 9,000 Series—

·See page 4-77 for RS-73 BOARD printed wiring board.

RS-73 BOARD (2/2)

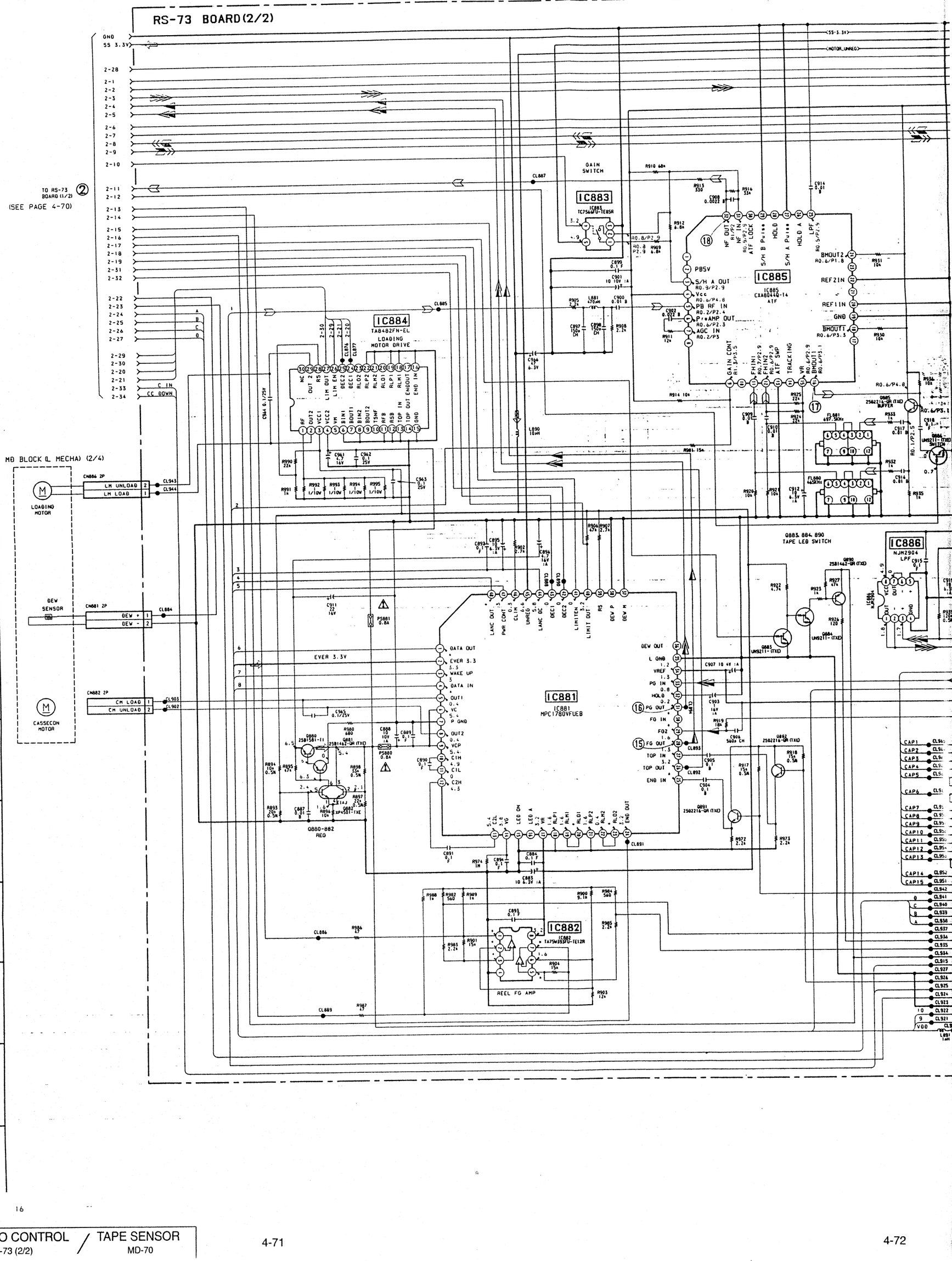

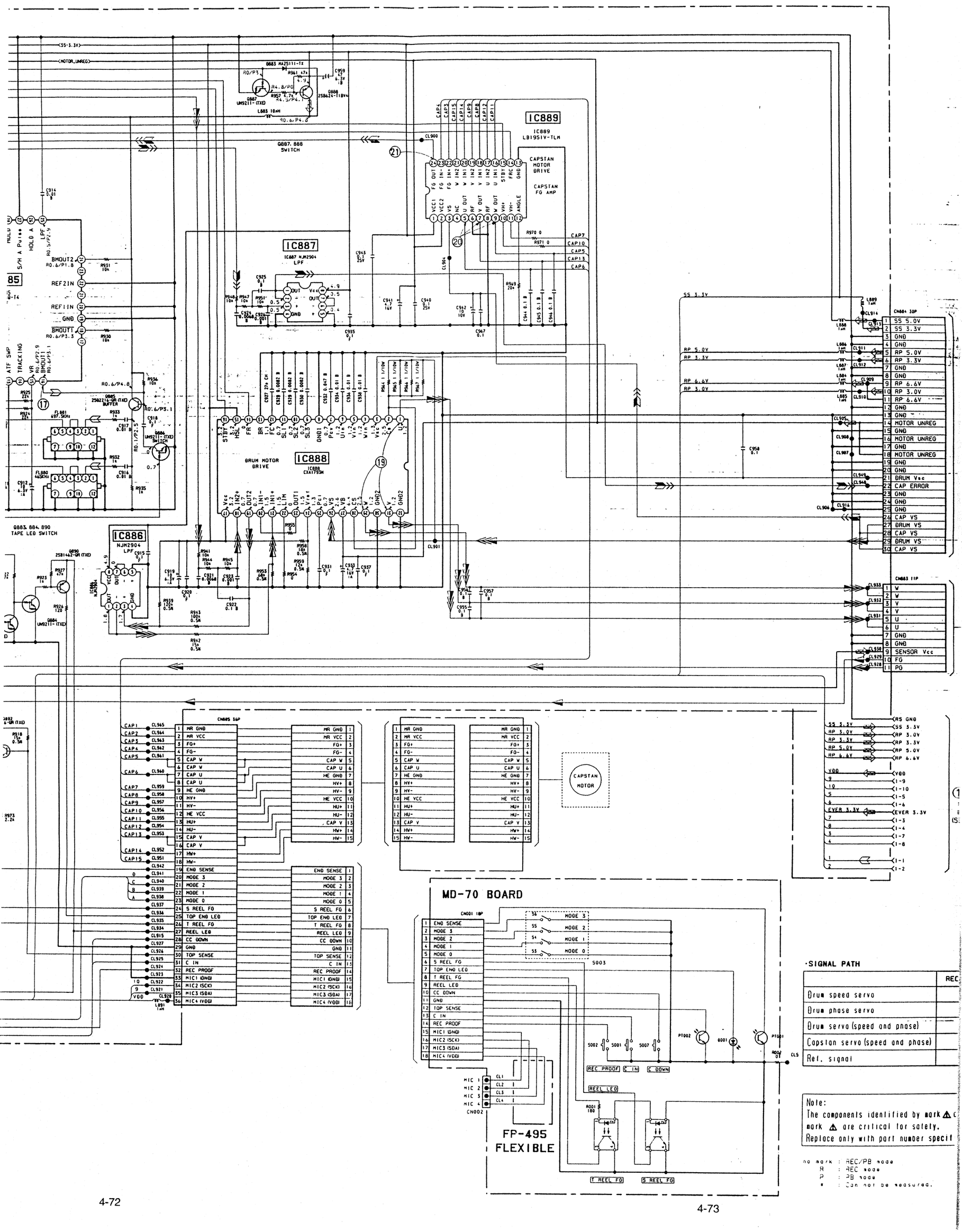
IC889
IC889 LB1951V-TLM
CAPSTAN MOTOR DRIVE
CAPSTAN FG AMP
IC887
IC887 NJM2904 LPF
IC888
CXA1793N
DRUM MOTOR DRIVE
IC886
NJM2904 LPF
Q883, 884, 890 TAPE LED SWITCH
Q887, 888 SWITCH
CN885 36P
CN884 30P
CN883 11P
MD-70 BOARD
CN001 18P
FP-495 FLEXIBLE
CAPSTAN MOTOR
·SIGNAL PATH
Drum speed servo
Drum phase servo
Drum servo (speed and phase)
Capstan servo (speed and phase)
Ref. signal
Note:
The components identified by mark ⚠ C
mark ⚠ are critical for safety.
Replace only with part number specif
no mark : REC/PB mode
R : REC mode
P : PB mode
* : Can not be measured.

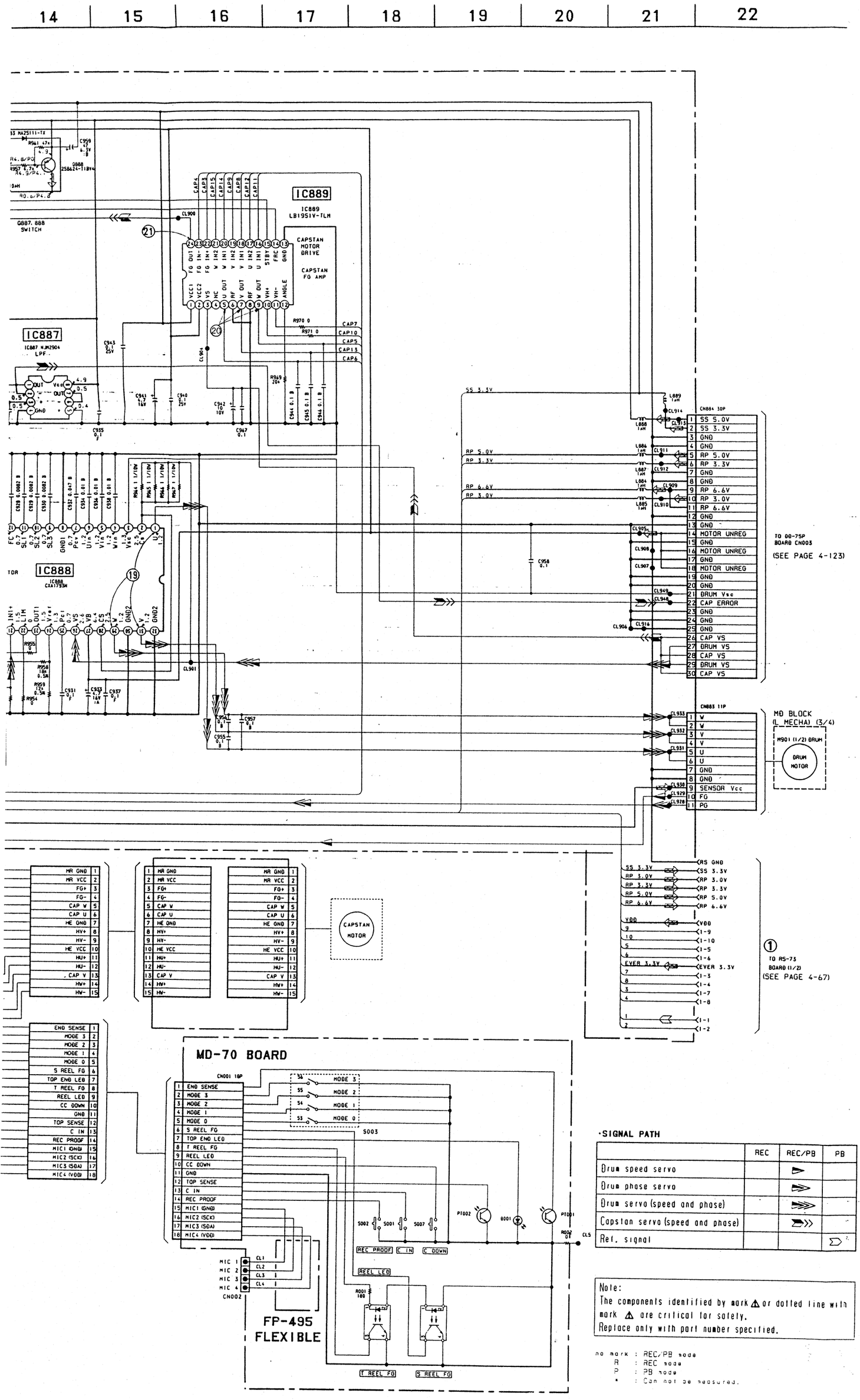

RS-73 BOARD (2/2)

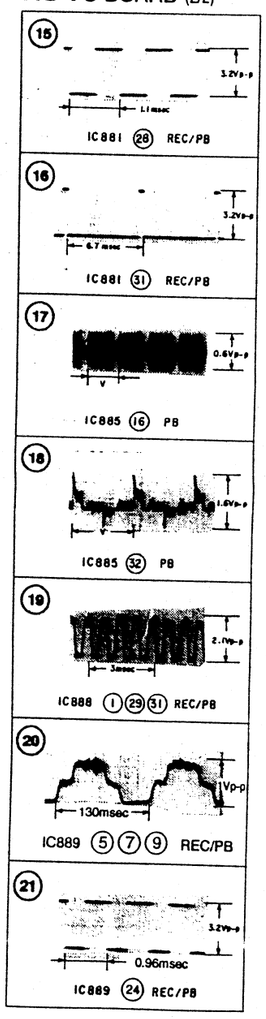

·SIGNAL PATH

	REC	REC/PB	PB
Drum speed servo		▷	
Drum phase servo		▷▷	
Drum servo (speed and phase)		▷▷▷	
Capstan servo (speed and phase)		▷▷	
Ref. signal			▷

Note:
The components identified by mark ⚠ or dotted line with mark ⚠ are critical for safety.
Replace only with part number specified.

no mark : REC/PB mode
R : REC mode
P : PB mode
* : Can not be measured.

MD-70 (TAPE SENSOR) PRINTED WIRING BOARD

— Ref. No. MD-70 Board: 9,000 Series —

There are few cases that the part printed on this diagram isn't mounted in this model.

MD-70 BOARD

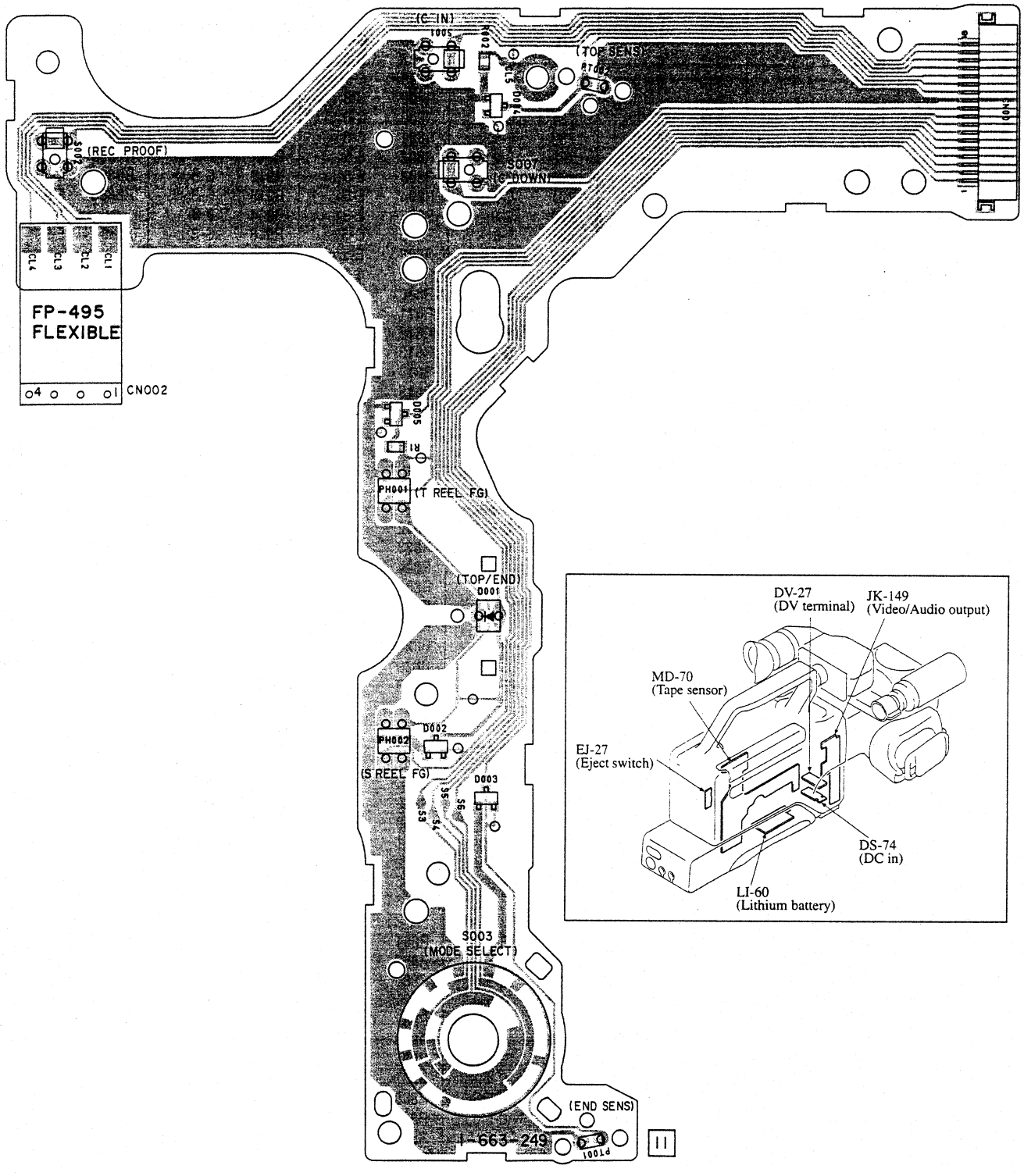

RS-73 BOARD

C770	E-5	C849	B-3	C936	B-9	L770	B-5	R792	C-6	R901	C-8	R991	E-2
C771	E-5	C850	F-4	C937	C-8	L772	C-5	R793	F-5	R902	E-9	R992	E-2
C772	B-7	C853	F-3	C938	B-9	L773	F-7	R794	G-5	R903	C-7	R993	E-2
C773	B-4	C854	F-4	C940	C-10	L774	G-6	R795	F-6	R904	B-8	R994	E-2
C774	G-5	C855	F-3	C941	C-10	L776	C-5	R796	C-6	R905	F-8	R995	E-2
C775	A-7	C857	G-5	C942	C-10	L777	E-6	R797	G-5	R906	E-9	R996	E-10
C776	B-4	C859	A-5	C943	C-10	L779	C-6	R798	F-5	R907	E-9		
C777	B-4	C861	F-4	C944	C-10	L780	G-5	R799	C-6	R908	F-8	RB880	E-10
C778	C-4	C862	F-3	C945	C-10	L781	G-5	R800	C-6	R909	G-8	RB881	E-10
C779	C-5	C873	E-3	C946	C-10	L782	F-5	R801	C-6	R910	G-7	RB882	F-10
C780	C-5	C874	E-4	C953	E-9	L783	B-2	R802	E-5	R911	F-8	RB883	F-10
C781	C-5	C875	E-4	C955	C-9	L789	C-4	R803	E-5	R912	G-8	RB884	E-10
C782	A-6	C876	F-3	C956	C-8	L791	C-7	R804	E-5	R913	G-8	RB885	F-9
C783	B-5	C880	E-10	C957	C-8	L880	G-9	R805	E-5	R914	B-8		
C784	B-5	C881	E-9	C958	B-8	L881	F-8	R806	G-5	R916	G-8	X880	E-9
C785	B-6	C882	G-9	C959	A-7	L883	B-7	R808	E-5	R917	E-9		
C786	G-6	C883	E-8	C961	F-2	L884	F-1	R809	G-5	R918	E-9		
C787	C-5	C884	E-8	C962	F-1	L885	B-1	R810	E-5	R919	F-8		
C788	G-6	C885	G-10	C963	E-2	L886	B-1	R811	E-5	R920	F-8		
C789	B-5	C886	F-9	C964	C-2	L887	B-1	R812	F-5	R921	F-7		
C791	C-5	C887	E-7	C965	E-8	L888	G-1	R813	E-5	R922	C-9		
C792	C-7	C888	E-8	C966	C-7	L889	B-1	R814	F-4	R923	C-9		
C793	B-5	C889	E-8	C967	C-10	L890	C-7	R815	F-5	R924	F-8		
C794	B-5	C890	E-8			L891	C-10	R816	B-3	R925	F-8		
C795	F-7	C891	E-8	CN771	D-4			R817	B-4	R926	C-9		
C796	F-6	C892	E-9	CN772	A-6	PS880	C-7	R818	A-5	R927	C-9		
C797	F-6	C893	C-7	CN773	A-8	PS881	B-2	R819	A-5	R930	G-7		
C798	F-7	C894	E-8	CN775	C-2			R820	A-5	R931	G-7		
C799	B-5	C895	E-9	CN881	D-2	Q772	C-5	R821	A-5	R932	F-7		
C800	G-6	C896	E-8	CN883	D-5	Q773	C-5	R822	B-4	R933	F-7		
C801	C-5	C897	F-8	CN884	F-1	Q774	G-7	R823	B-3	R935	F-7		
C802	E-5	C898	F-8	CN885	C-9	Q775	G-6	R824	G-5	R936	G-7		
C803	C-5	C899	G-7	CN886	D-2	Q776	G-5	R825	G-5	R939	C-7		
C804	C-7	C900	G-8	CN888	B-10	Q777	G-5	R826	G-5	R941	B-8		
C806	C-6	C901	G-7			Q778	A-5	R827	G-5	R942	C-7		
C809	F-5	C902	G-8	D771	C-5	Q779	G-5	R828	F-4	R943	C-7		
C810	E-5	C903	F-8	D772	G-6	Q784	G-5	R829	F-3	R944	B-8		
C811	C-6	C904	F-8	D773	C-6	Q880	E-7	R830	F-4	R945	B-8		
C814	C-6	C905	F-8	D774	C-4	Q881	E-7	R831	F-3	R947	B-10		
C815	C-6	C906	F-8	D775	C-3	Q882	E-7	R832	A-5	R948	B-10		
C816	C-6	C907	F-8	D776	C-6	Q883	C-9	R833	G-5	R951	B-10		
C818	C-6	C908	G-8	D883	B-7	Q884	C-9	R843	F-4	R953	B-8		
C819	F-5	C909	F-8	D884	G-9	Q885	G-7	R844	F-3	R954	B-8		
C821	F-5	C910	F-7	D885	E-10	Q886	G-7	R849	C-4	R955	B-8		
C822	F-5	C911	E-7			Q887	B-8	R850	C-4	R957	B-8		
C823	F-5	C912	F-7	FL770	G-6	Q888	B-7	R851	C-3	R958	B-8		
C824	F-5	C913	E-10	FL771	F-6	Q890	C-9	R852	C-3	R959	B-8		
C825	F-5	C914	G-8	FL772	E-6	Q891	E-9	R855	F-5	R961	B-8		
C826	F-5	C915	B-7	FL880	E-7	Q892	E-8	R856	F-5	R964	B-9		
C827	E-5	C916	F-7	FL881	F-7			R858	G-5	R965	B-9		
C828	F-5	C917	F-7			R770	B-7	R861	B-5	R966	B-9		
C829	A-5	C918	G-7	IC770	B-7	R771	E-5	R862	B-5	R967	B-9		
C830	F-5	C919	B-8	IC771	E-5	R774	C-5	R880	F-9	R969	C-10		
C831	C-5	C920	B-8	IC772	F-6	R776	C-5	R881	E-10	R970	C-10		
C832	F-5	C921	B-8	IC773	B-5	R777	B-4	R882	F-9	R971	C-10		
C833	F-5	C922	B-8	IC774	B-6	R778	B-5	R883	F-9	R972	E-9		
C834	E-5	C923	B-8	IC775	F-5	R779	B-4	R885	E-9	R973	E-8		
C835	E-5	C924	B-10	IC777	B-4	R780	C-4	R887	G-9	R974	E-8		
C836	F-5	C925	B-10	IC880	F-10	R781	C-5	R888	G-9	R980	E-7		
C837	F-5	C926	B-10	IC881	E-8	R782	C-5	R889	G-9	R981	B-8		
C838	G-5	C927	B-9	IC882	C-8	R783	C-5	R890	E-10	R982	C-8		
C839	F-5	C928	B-9	IC883	G-8	R784	F-6	R891	F-10	R983	C-8		
C841	F-5	C929	B-9	IC884	F-2	R785	F-6	R893	F-7	R984	C-8		
C842	F-5	C930	B-9	IC885	G-8	R786	B-5	R894	E-7	R985	B-8		
C843	F-5	C931	B-8	IC886	B-7	R787	B-5	R895	E-7	R986	C-8		
C844	F-5	C932	B-9	IC887	B-10	R788	B-5	R896	E-7	R987	C-8		
C845	F-4	C933	C-8	IC888	B-8	R789	G-6	R897	E-7	R988	B-8		
C847	F-4	C934	B-9	IC889	C-10	R790	G-6	R898	E-7	R989	C-7		
C848	F-4	C935	B-10			R791	F-5	R900	B-8	R990	E-2		

RS-73 (MECHANISM/SERVO CONTROL) PRINTED WIRING BOARD

— Ref. No. RS-73 Board: 1,000 Series —

There are few cases that the part printed on this diagram isn't mounted in this model.

RS-73 BOARD (SIDE A)

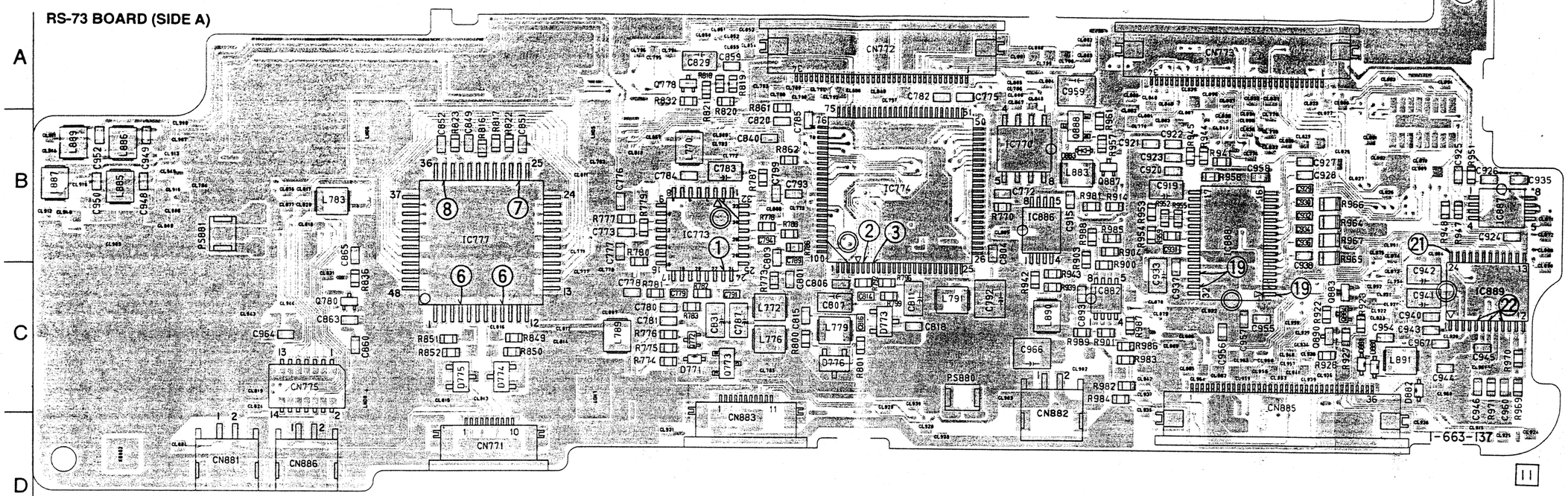

RS-73 BOARD (SIDE B)

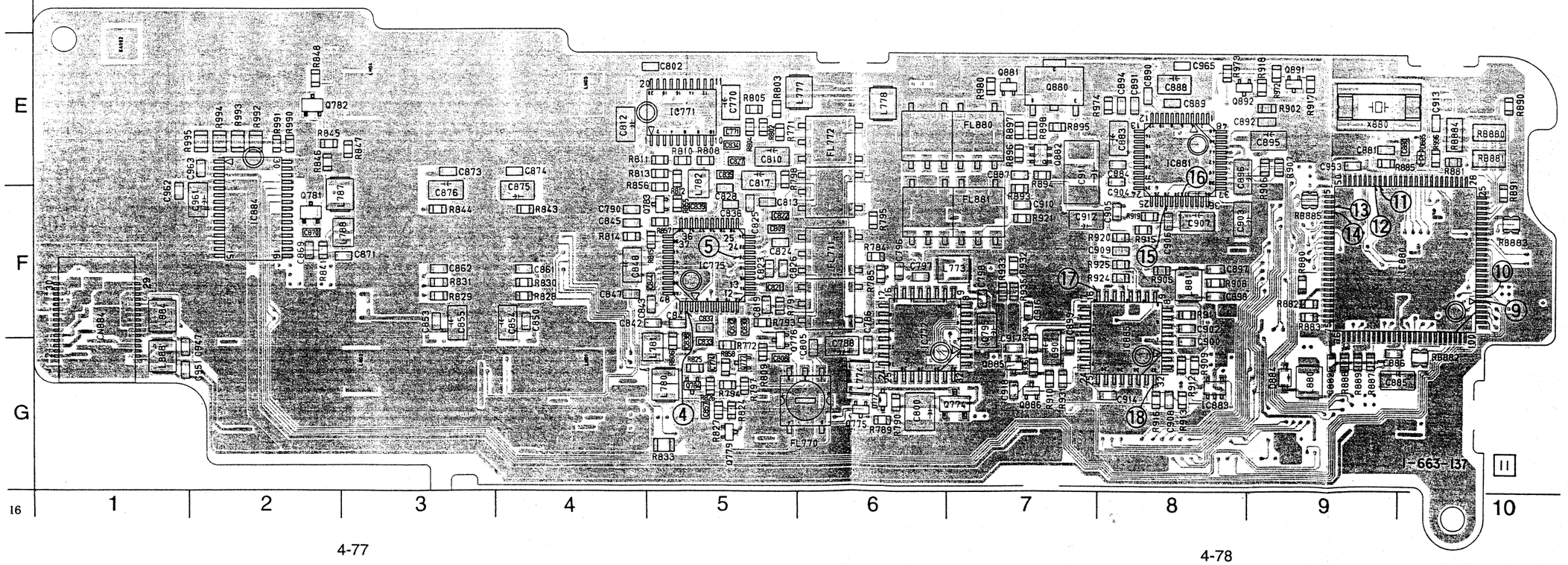

CD-160
(CCD Imager)

SE-5
(Ste

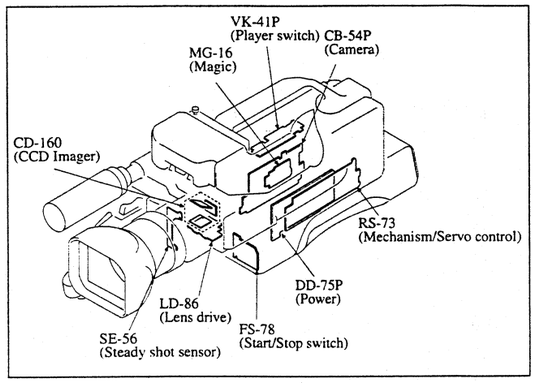

CONTROL PANEL) PRINTED WIRING BOARD
lo. FK-68 Board; 4,000 Series —

OARD

F-3	R401	F-10
F-4	R402	H-4
H-3	R403	H-4
H-13	R405	H-9
E-13	R406	H-9
H-8	R407	B-6
G-12	R408	C-6
G-13	R410	B-2
	R411	B-2
H-9	R412	B-2
H-9	R413	C-2
C-9	R415	B-4
C-8	R416	B-4
C-8	R417	B-4
C-7	R418	C-4
C-6	R430	H-6
A-6	R431	F-7
A-7	R434	F-3
A-8	R435	F-3
A-9	R436	F-10
A-9		
D-8	S401	D-9
E-6	S402	D-8
B-2	S404	A-5
F-1	S406	D-10
D-9	S407	D-11
D-8	S408	D-7
F-6	S410	C-5
H-5	S411	C-1
D-10	S412	C-3
D-11	S414	D-10
B-6	S415	D-7
B-4	S417	A-3
F-3		
C-10		

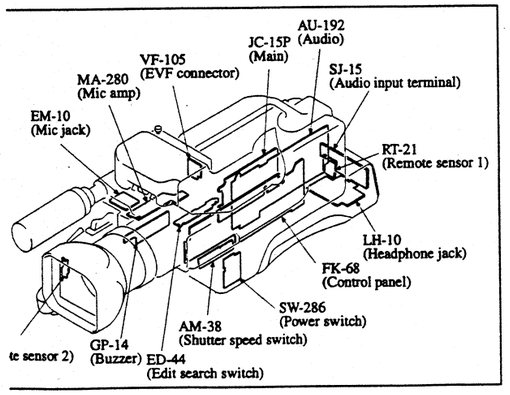

There are few cases that the part printed on this diagram isn't mounted in this model.

FK-68 BOARD (SIDE A)

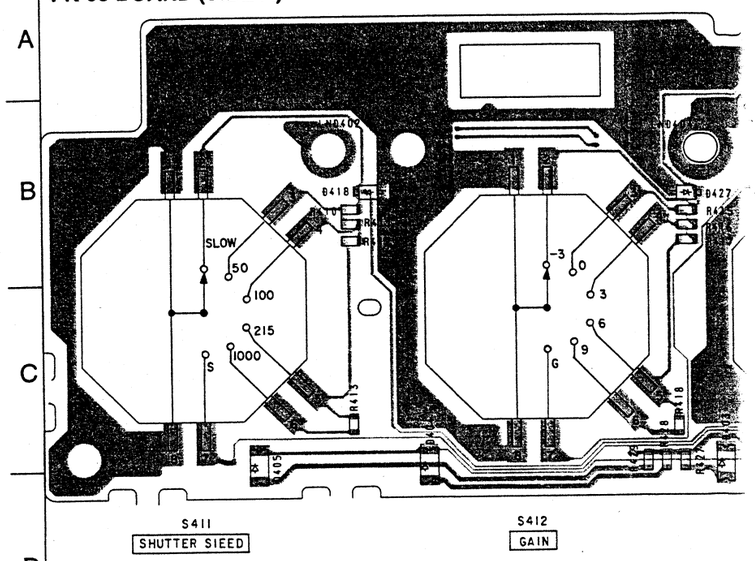

FK-68 BOARD (SIDE B)

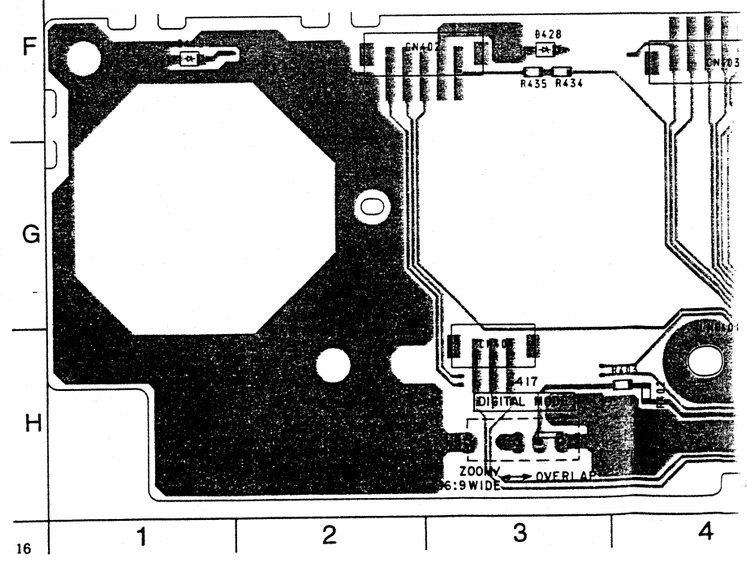

n isn't mounted in this model.

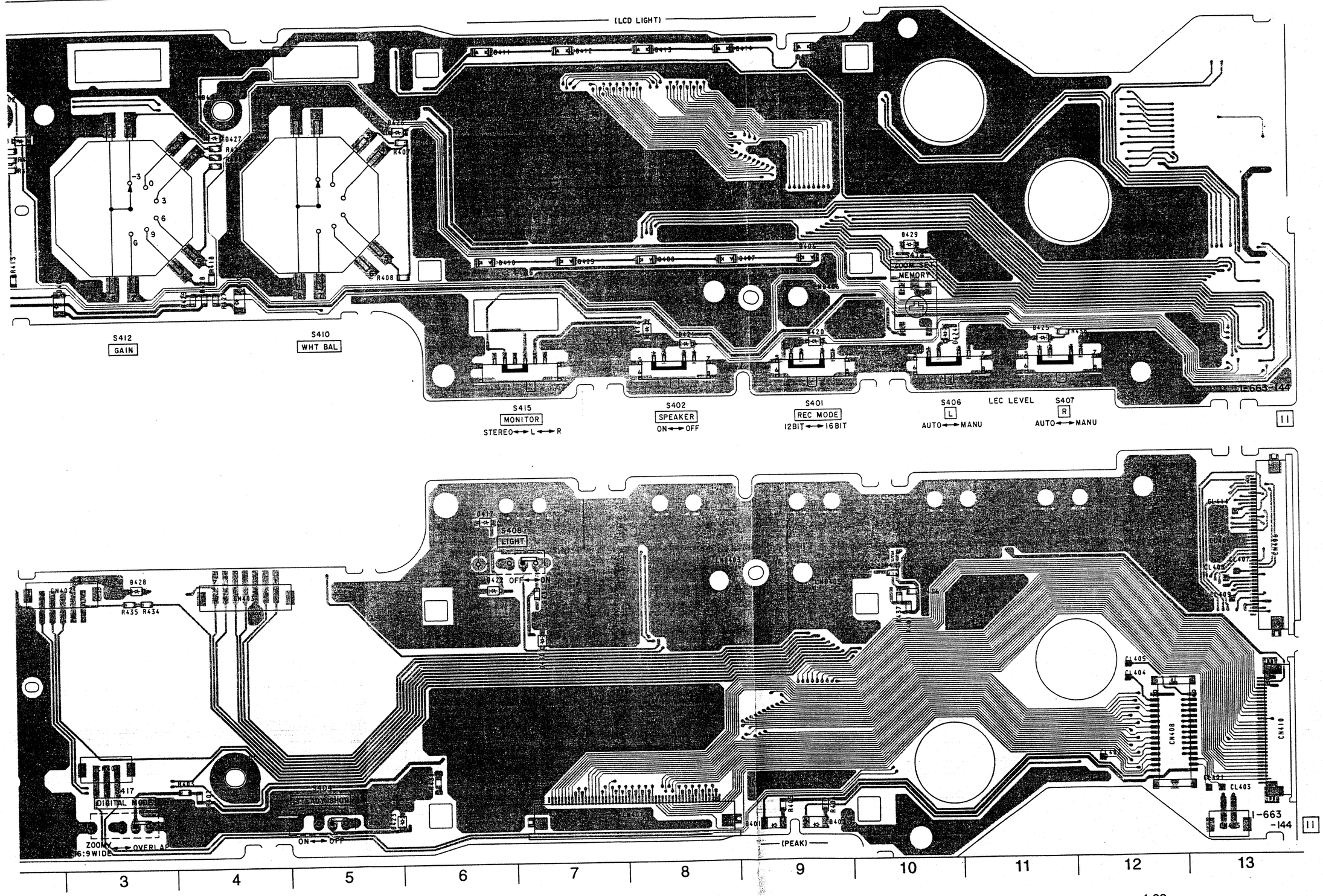

FK-68 (CONTROL PANEL), ED-44 (EDIT SEARCH SWITCH), AM-38 (SHUTTER SPEED SWITCH), SW-286 (POWER SWITCH) SCHEMATIC DIAGRAMS

— Ref. No. FK-68, ED-44, AM-38, SW-286 Boards; 4,000 Series —

• See page 4-86 for ED-44, AM-38, SW-286 BOARD printed wiring boards.

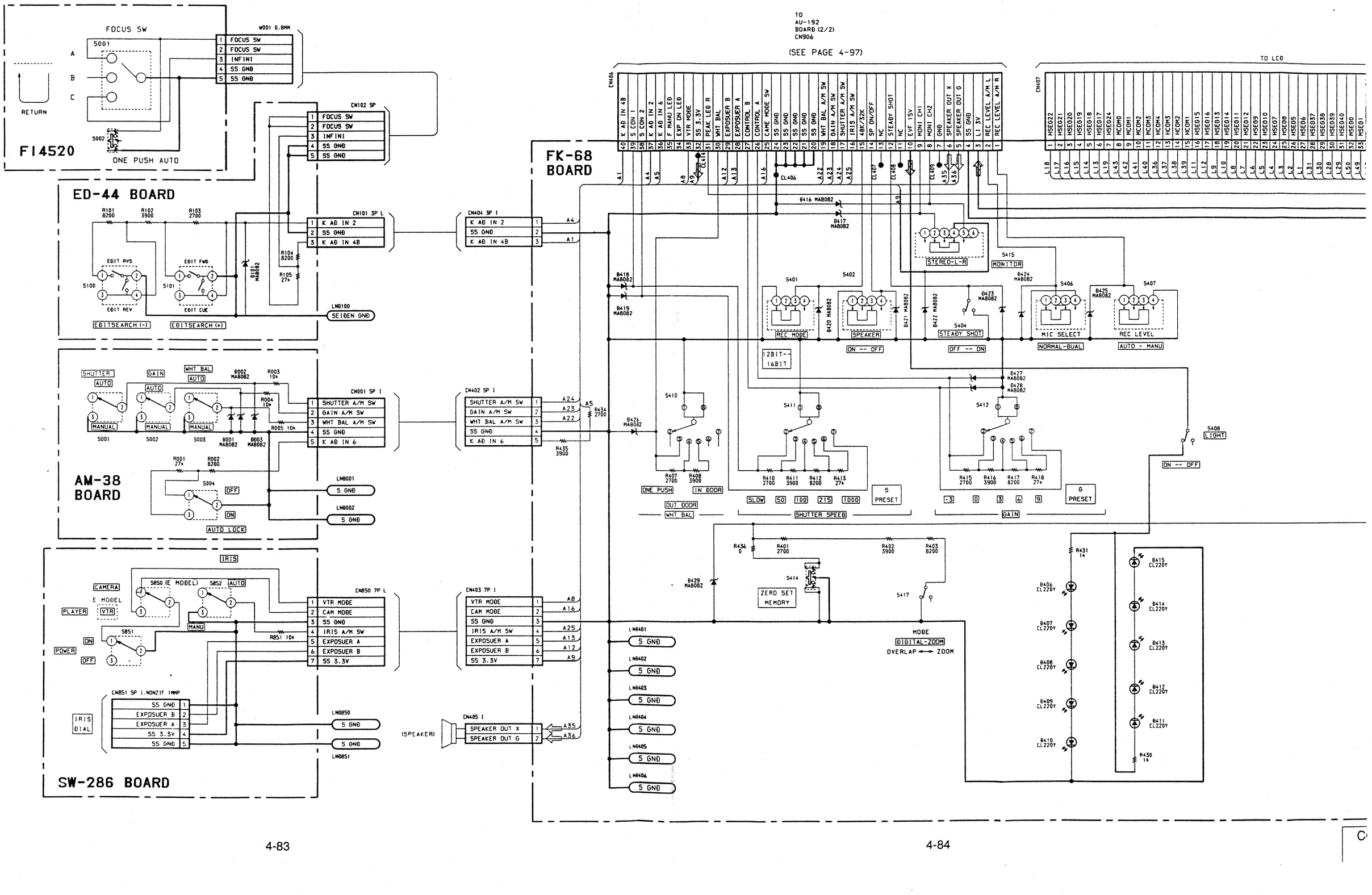

·SIGNAL PATH

	VIDEO SIGNAL			AUDIO SIGNAL
	CHROMA	Y	Y/CHROMA	
REC				
PB				⇨

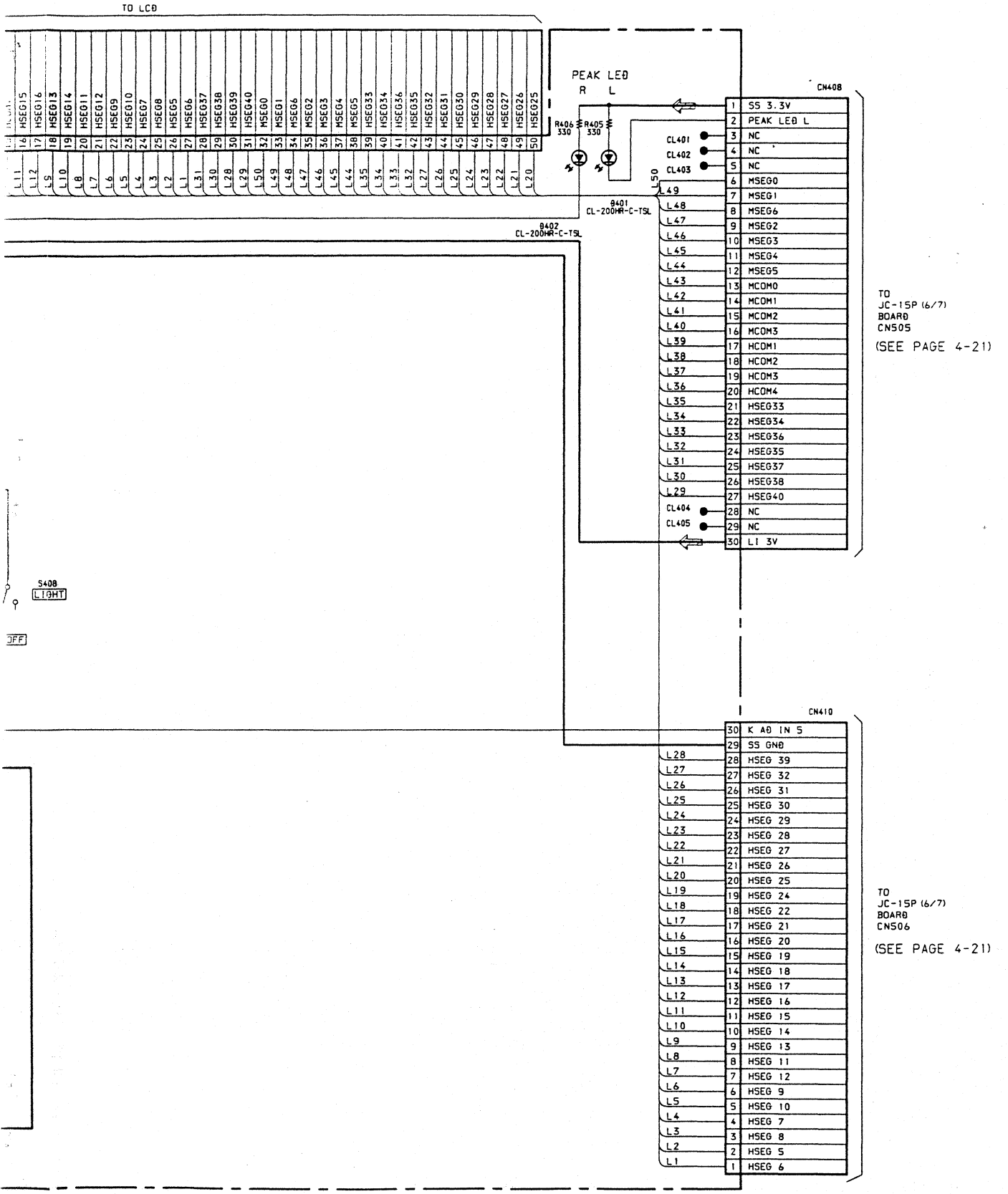

There are

ED-44 BOARD (SIDE A)

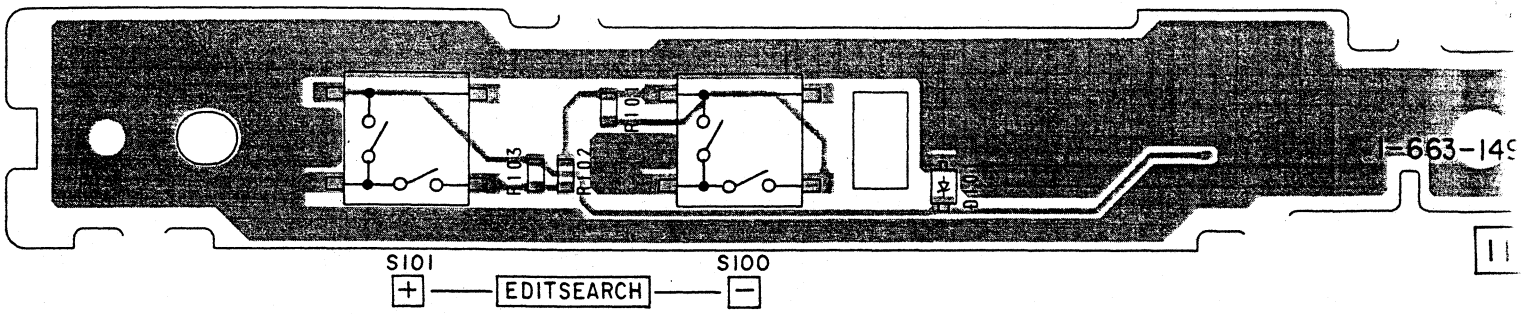

ED-44 BOARD (SIDE B)

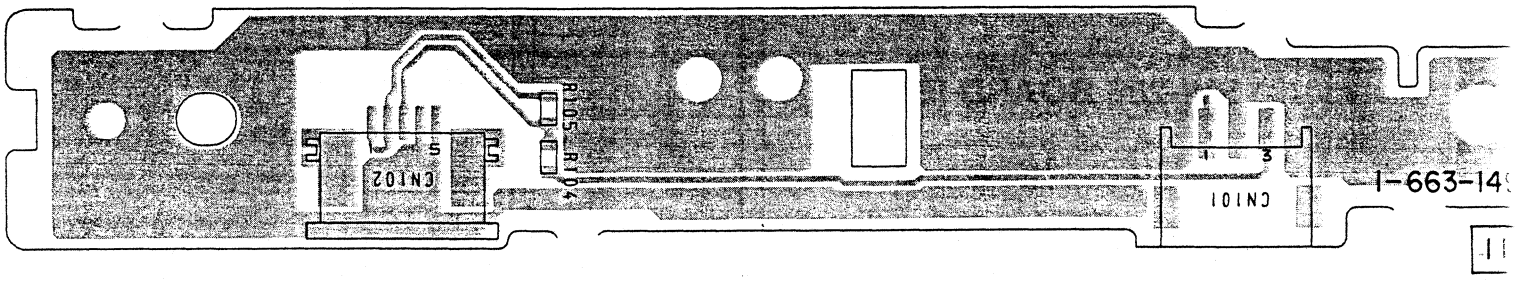

AM-38 BOARD (SIDE A)

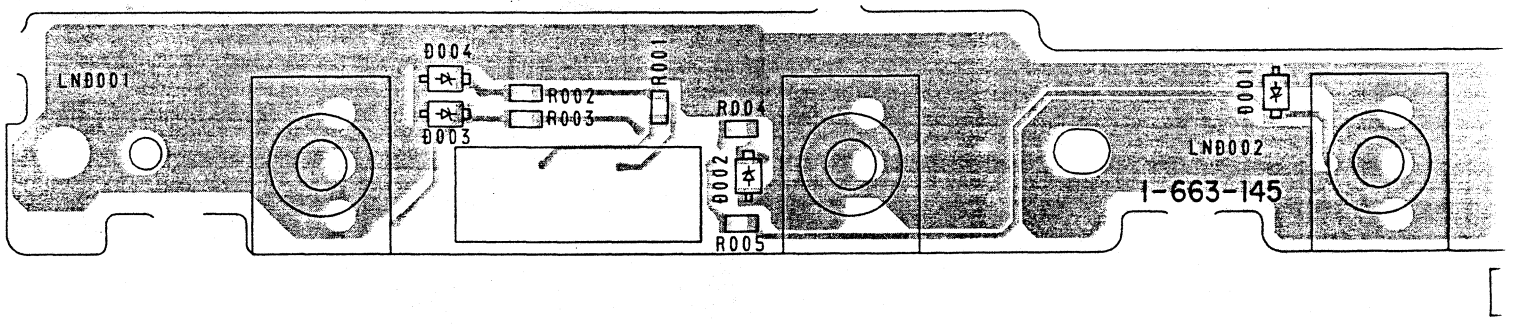

AM-38 BOARD (SIDE B)

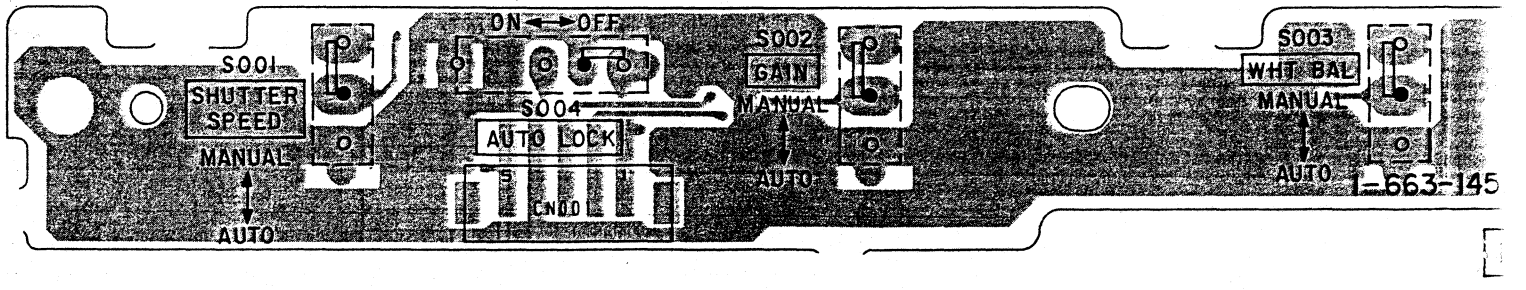

There are few cases that the part printed on this diagram isn't mounted in this model.

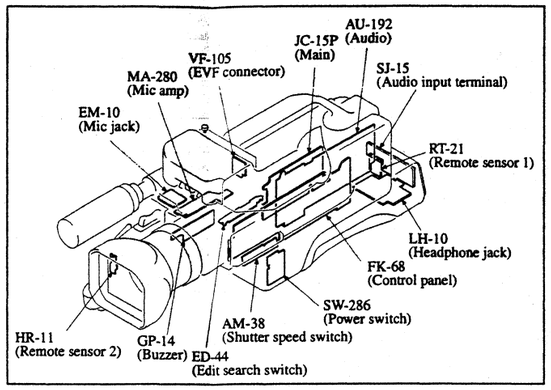

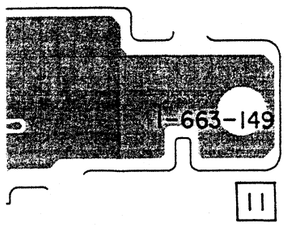

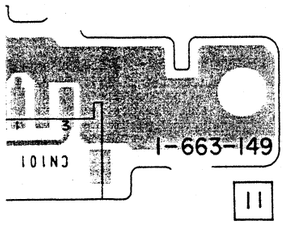

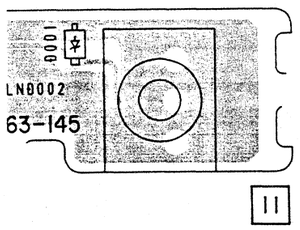

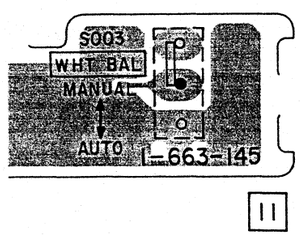

SW-286 BOARD (SIDE A)

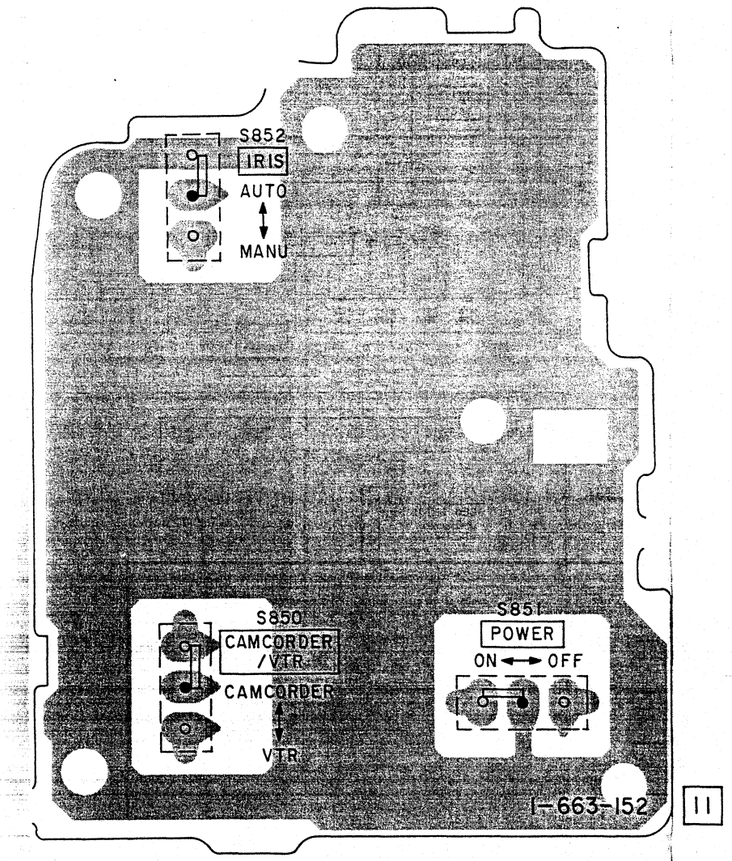

SW-286 BOARD (SIDE B)

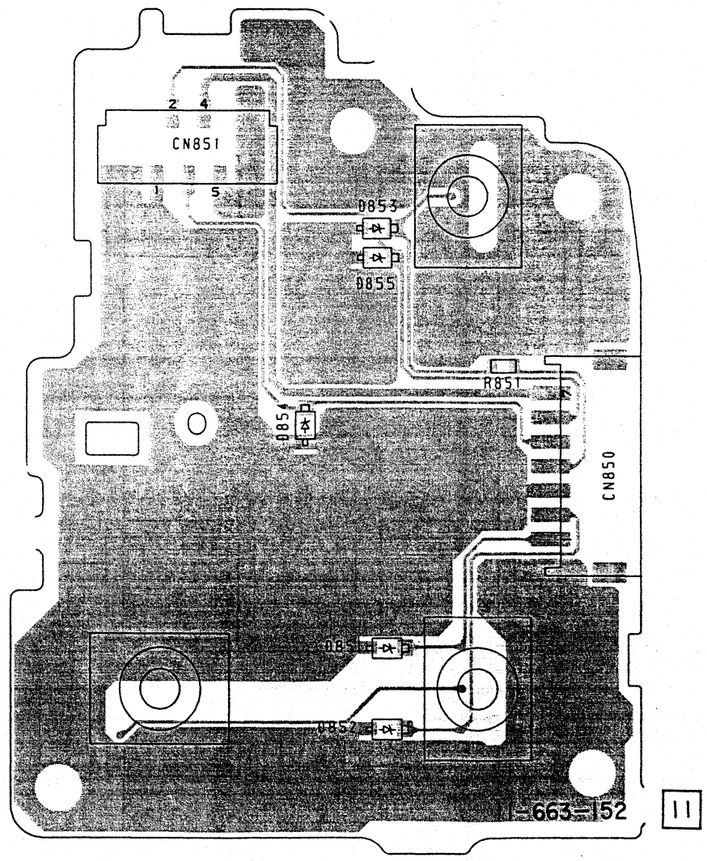

AU-192 (AUDIO), JK-149 (VIDEO/AUDIO OUTPUT TERMINAL), EM-10 (MIC JACK), MA-280(MIC AMP) SCHEMATIC DIAGRAMS

— Ref.No. AU-192, EM-10, MA-280 Boards: 2,000 Series, JK-149 Board: 4,000 Series —

•See page 4-101 for AU-192 BOARD printed wiring board.

•See page 4-106 for EM-10, MA-280 and JK-149 BOARD printed wiring boards.

EM-10 BOARD

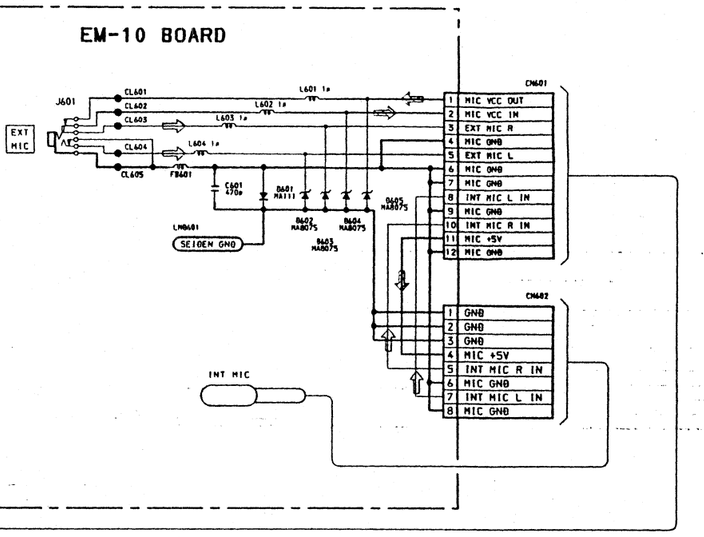

MA-280 BOARD

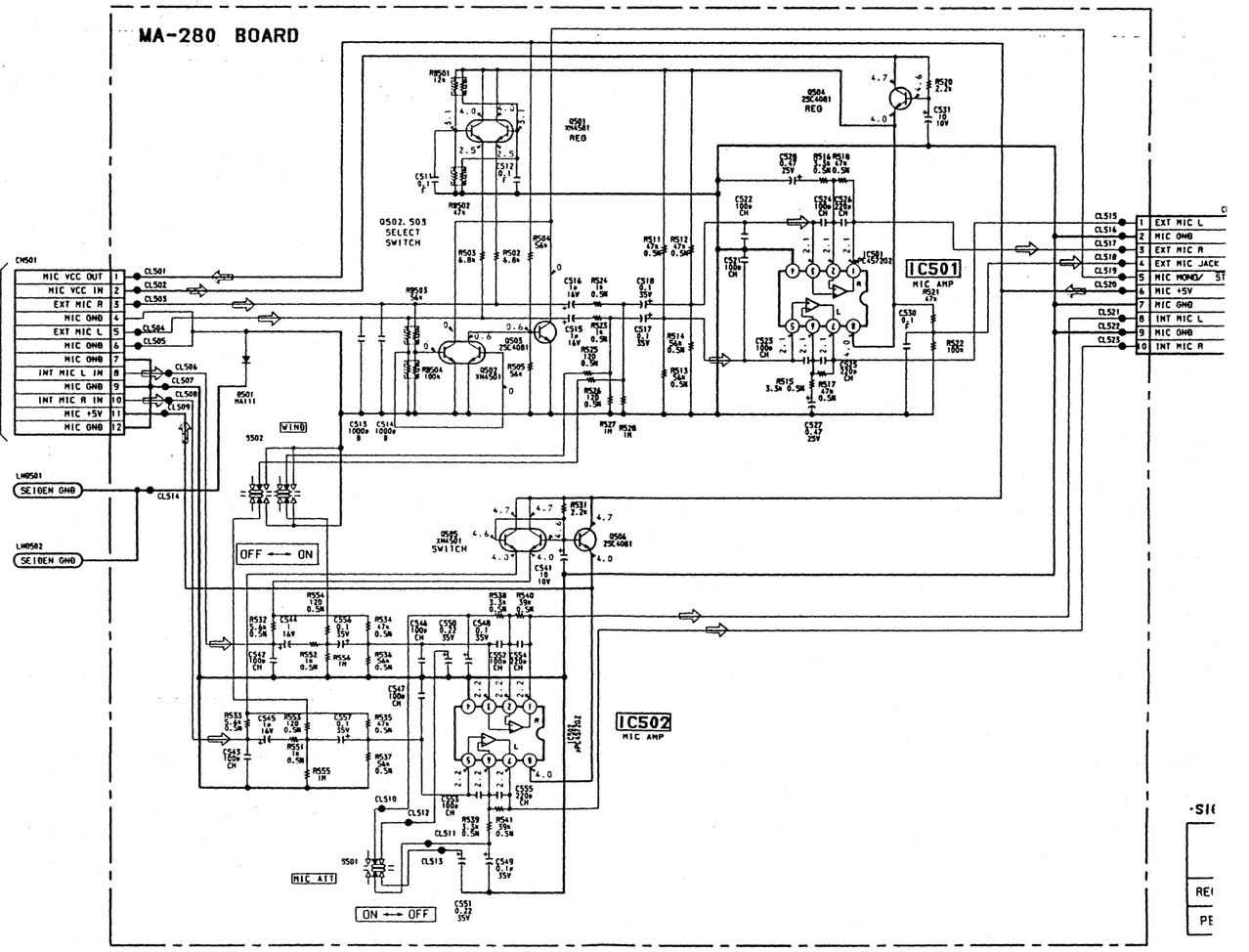

AU-192 BOARD

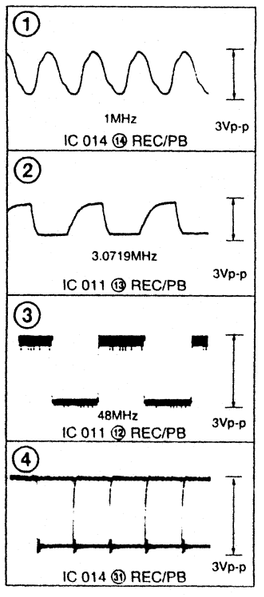

MS

JK-149 BOARD

OUT

J201 S VIDEO

J206 VIDEO

RFU DC

AUDIO L

AUDIO R

LM8205 SEIDEN GND

CN201 15P

1	V DET
2	S JACK IN
3	Y OUT
4	GND
5	C OUT
6	GND
7	V OUT
8	GND
9	RFU DC OUT
10	AU LINE OUT L SW
11	AU LINE OUT L
12	A GND
13	AU LINE OUT R SW
14	AU LINE OUT R
15	A GND

JC-15P BOARD (S/7) CN643

(SEE PAGE 4-16)

CN202 15P

E1	1	EXT MIC L
E2	2	MIC GND
E3	3	EXT MIC R
E4	4	EXT MIC JACK
E5	5	MIC MONO/ST
E6	6	MIC +5V
E7	7	GND
E8	8	INT MIC L
E9	9	GND
E10	10	INT MIC R
	11	5S 5V
	12	C.VIDEO OUT
	13	GND

CN002

EXT MIC L	1	CL007
MIC GND	2	CL008
EXT MIC R	3	CL009
EXT MIC JACK	4	CL010 A04
MIC MONO/ST	5	CL011 A05
MIC +5V	6	CL012
MIC GND	7	CL013
INT MIC L	8	CL014
MIC GND	9	CL015
INT MIC R	10	CL016
5S 5V	11	
C.VIDEO OUT	12	
GND	13	

LM8200 SEIDEN GND

LM8201 SEIDEN GND

LM8202 SEIDEN GND

CN502

CL515	1	EXT MIC L
CL516	2	MIC GND
CL517	3	EXT MIC R
CL518	4	EXT MIC JACK
CL519	5	MIC MONO/ ST
CL520	6	MIC +5V
	7	MIC GND
CL521	8	INT MIC L
CL522	9	MIC GND
CL523	10	INT MIC R

CN203 10P

EXT MIC L	10	E1
MIC GND	9	E2
EXT MIC R	8	E3
EXT MIC JACK	7	E4
MIC MONO/ST	6	E5
MIC +5V	5	E6
GND	4	E7
INT MIC L	3	E8
GND	2	E9
INT MIC R	1	E10

·SIGNAL PATH

	VIDEO SIGNAL			AUDIO SIGNAL
	CHROMA	Y	Y/CHROMA	
REC				➡
PB	⇨	⇨	⇨	⇨

AU-192 BOARD (1/2)

A02 A01 A03

REC LEVEL L

REC LEVEL R

IC002 BUFFER

IC003 BUFFER

IC004 SELECT SWITCH

IC006 AGC2

IC015 LINE AMP

LINE L IN 1-4
AU 6.0V 1-3
A GND 1-2
LINE R IN 1-1

A01 A02 A03

1 TO (2/2)

(SEE PAGE 4-96)

AU-192 BOARD (1/2)

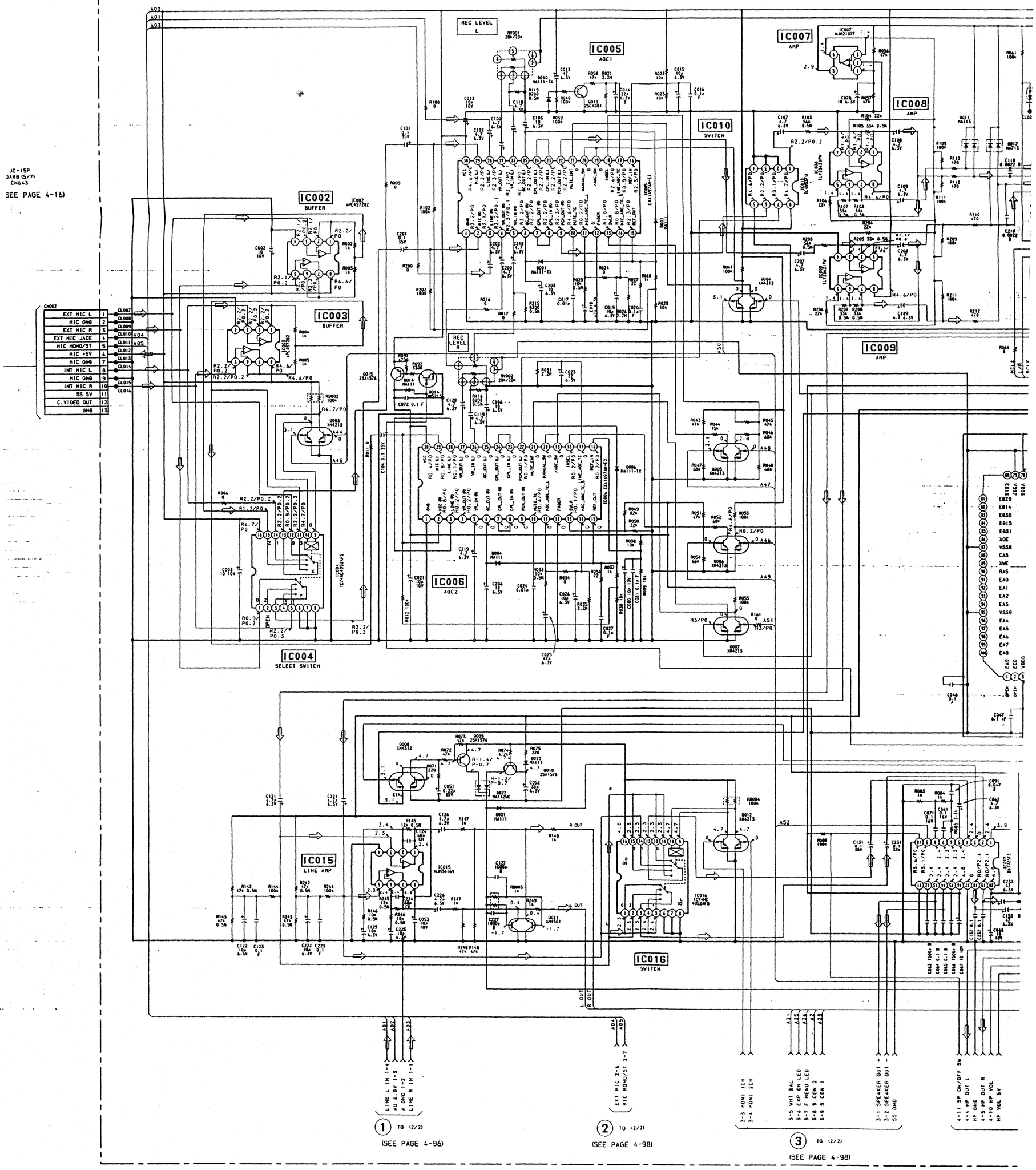

29 | 30 | 31 | 32 | 33 | 34 | 35 | 36 | 37 | 38 | 39 | 40 | 41 | 42 | 43

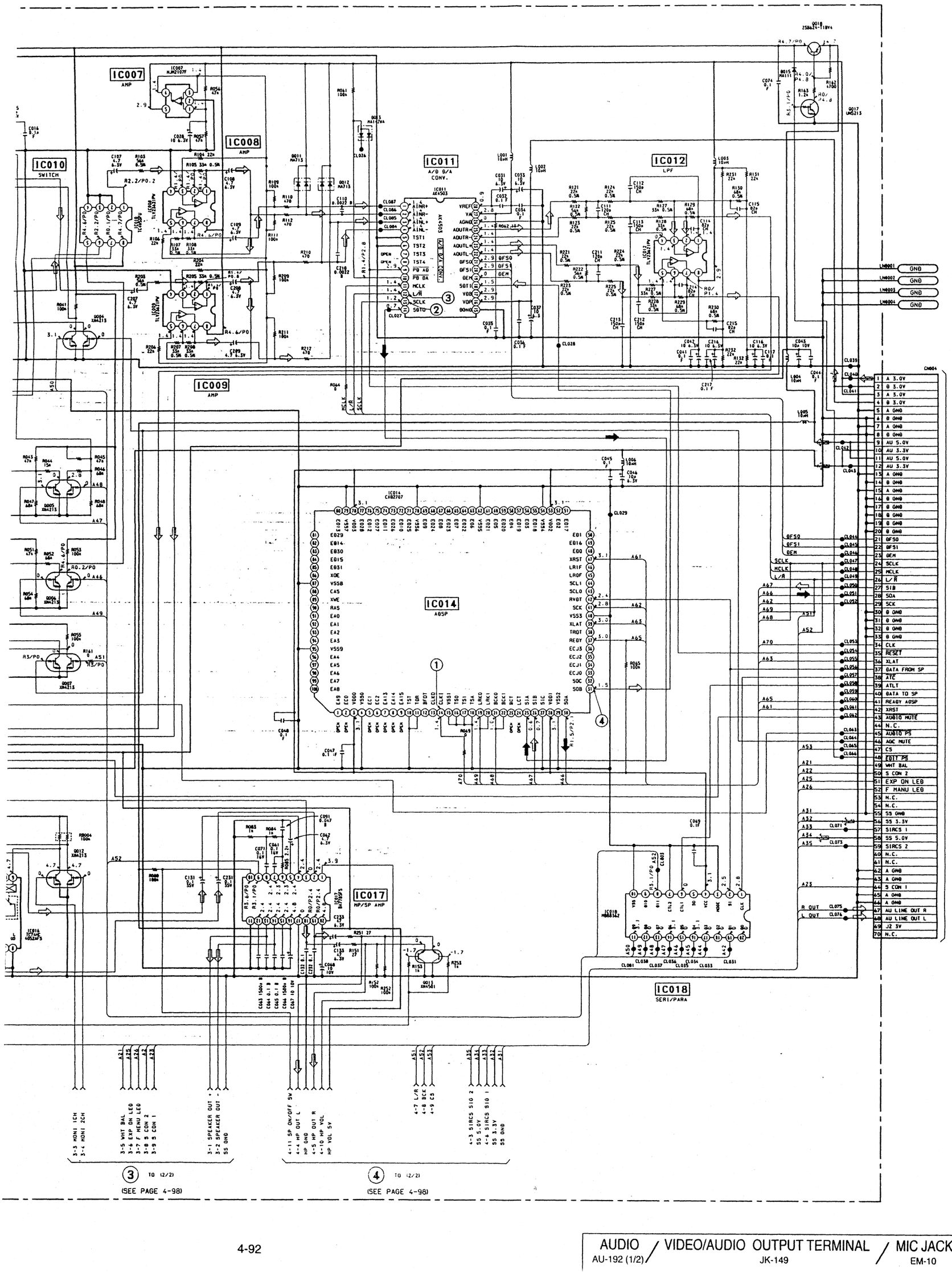

AU-192 (AUDIO SELECT), EJ-27 (EJECT SWITCH), GP-14 (BUZZER), HR-11 (REMOTE SENSOR 2), SJ-15 (AUDIO INPUT TERMINAL), LH-10 (HEADPHONE JACK), RT-21 (REMOTE SENSOR 1), VK-41P (PLAYER SWITCH), FS-78 (START/STOP SWITCH), LI-60 (LITHIUM BATTERY), VF-105 (EVF CONNECTOR) SCHEMATIC DIAGRAMS

— Ref. No. AU-192 Board: 2. 000 Series. EJ-27. VK-41P. HR-11 Boards. 4. 000 Series. GP-14. SJ-15. LH-10. RT-21. FS-78. LI-60 Boards: 5. 000 Series. VF-105 Board: 1. 000 Series —

• See page 4-101 for AU-192 BOARD printed wiring board.

• See page 4-111 for EJ-27. GP-14. HR-11. SJ-15. LH-10. RT-21. VK-41P and FS-78 BOARD printed wiring boards.

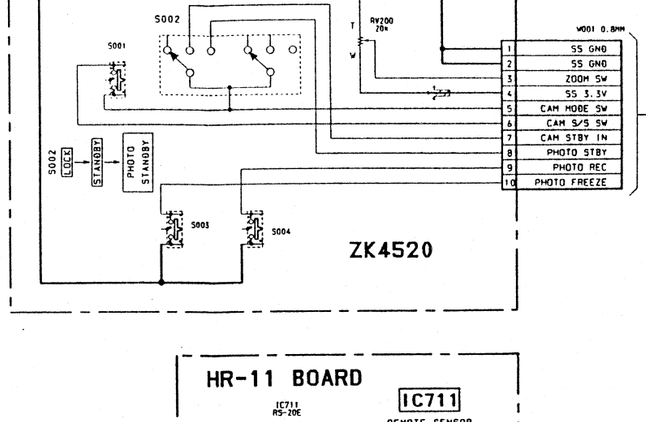

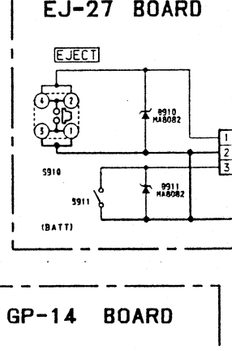

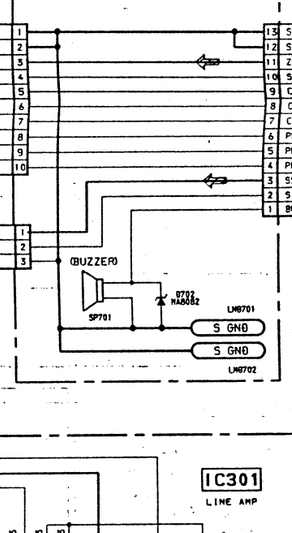

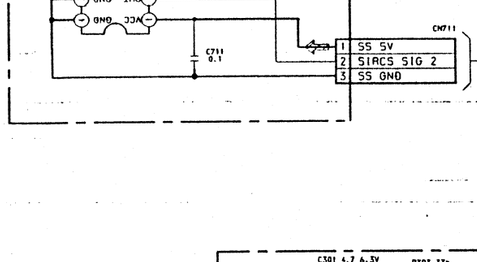

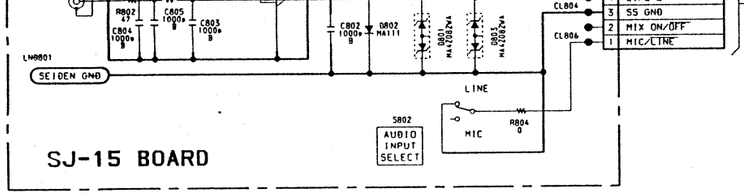

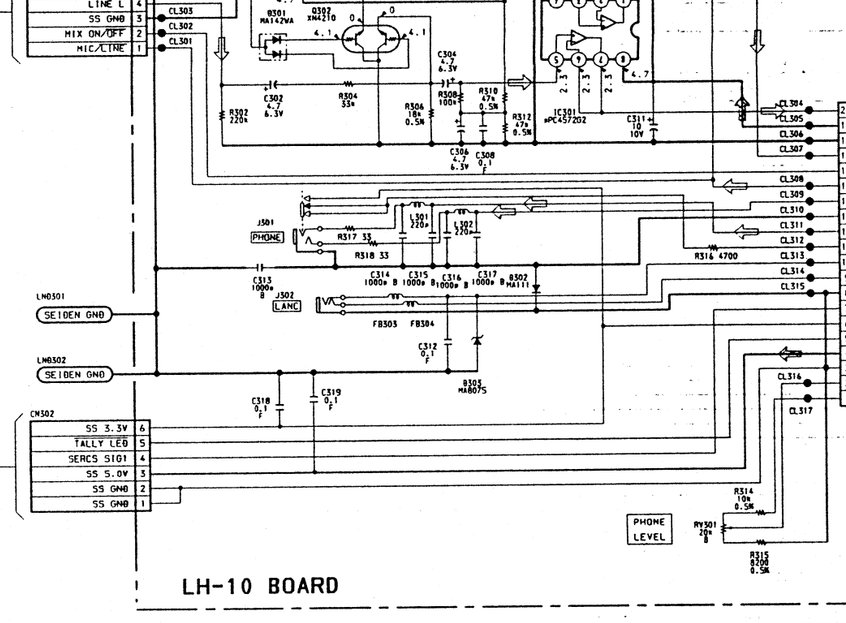

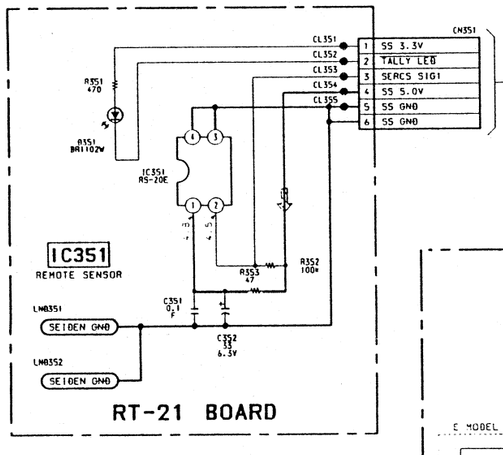

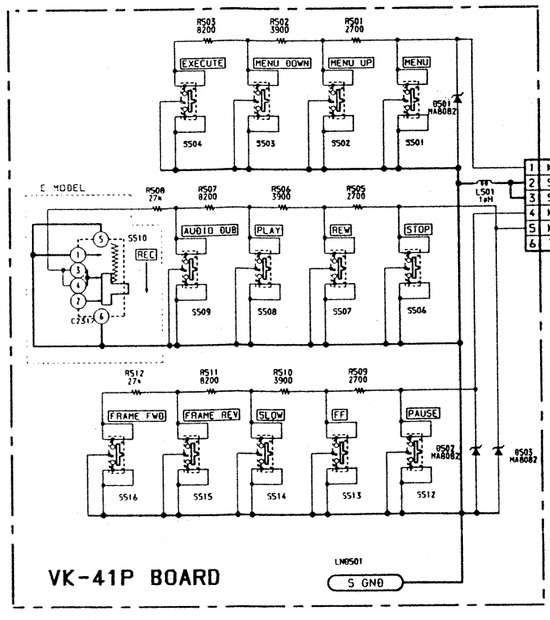

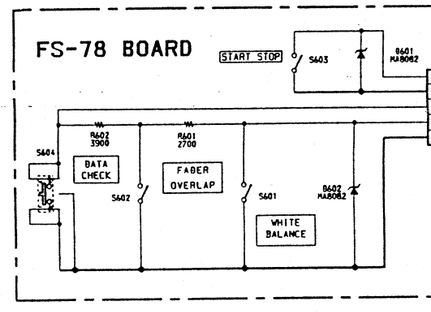

16 17 18 19 20 21 22 23 24 25 26 27 28 29 30

AU-192 BOARD (2/2)

IC901 BC/BC CONV

TO FK-68 BOARD CN406 (SEE PAGE 4-84)

CN906: 1 K AD IN 4C, 2 S CON 1, 3 S CON 2, 4 K AD IN 2, 5 K AD IN 6, 6 F MANU LED, 7 EXP ON LED, 8 VTR MODE, 9 SS 3.3V, 10 PEAK LED R, 11 WHT BAL, 12 EXPOSURE B, 13 EXPOSURE A, 14 CONTROL B, 15 CONTROL A, 16 CAME MODE SW, 17 SS GND, 18 SS GND, 19 SS GND, 20 SS GND, 21 SS GND, 22 WHT BAL A/M SW, 23 GAIN A/M SW, 24 SHUTTER A/M SW, 25 IRIS A/M SW, 26 48K/32K, 27 SP ON/OFF SW, 28 NC, 29 STEADY SHOT, 30 NC, 31 EVF 15V, 32 MONI CH1, 33 MONI CH2, 34 GND, 35 SPEAKER OUT X, 36 SPEAKER OUT G, 37 SS GND, 38 LI 3V, 39 REC LEVEL A/M L, 40 REC LEVEL A/M R

CN910: 1 LI 3V, 2 SS GND

LITHIUM — CN930: LI 3V 1, GND 2 — L1930 B930 MA8082 — C930 1F

LM0930: S GND

LI-60 BOARD

F36 SPEAKER OUT - 3-2
F35 SPEAKER OUT + 3-1
F34 SS GND
F33 MONI 2CH 3-4
F32 MONI 1CH 3-3
F11 WHT BAL (CN004-49) 3-5
F7 EXP ON LED 3-6
F6 F MANU LED 3-7
F5 S CON 2 (CN004-50) 3-8
F2 S CON 1 (CN004-64) 3-9

3 TO (1/2) (SEE PAGE 4-92)

R962 100k, R949 100k

R957 100k

R955 100k F22, R954 100k F23, R953 100k F24, R952 100k F25, R951 100k F26, R948 100k F29

IC906 PARALLEL/SERIAL CONV.

IC904 M5M5M5436FP 0 RAM

R968 470Ω, R967 100k, R966 100k, R965 100k, R964 100k, R961 100k

B4 MIC MONO/ST 2-7, B3 EXT MIC 2-6

2 TO (1/2) (SEE PAGE 4-91)

R950 100k

L905 10μH

CN914: 24 EVF UNREG, 23 EVF UNREG GND, 22 DATA FROM MODE, 21 MD SCK, 20 EXP CS, 19 ZEBRA PATTERN, 18 EXP SI, 17 DATA FROM MI, 16 VB, 15 EVF CG, 14 EVF CG BLK, 13 EVF CB BLK, 12 BNC ON/OFF, 11 TALLY, 10 EVF Y, 9 EVF 15V, 8 EVF SYNC, 7 EVF GND, 6 EVF CR (R-Y), 5 V1 3.3V, 4 EVF CB (B-Y), 3 EVF GND, 2 EVF 5V, 1 WIDE

TO CB-54P BOARD (3/3) CN290 (SEE PAGE 4-65)

CL954, R956 0

IC902 MC74HC4053F — IC902 SYNC & CHARA/GENE INPHASE

R944 2200Ω ±0.5%, R943 549Ω ±0.5%, R942 560Ω ±0.5%, R941 1200Ω ±0.5%

C925 0.1μF

IC905 TC7S32FU — IC905 OR GATE

R946 1k, C924 6.3V

IC907 MM1118XF — IC907 ZEBRA ON/OFF

R960 2kΩ 0.5%, R959 10k 0.5%, C929 0.1μF, C930 10 10V, C927 1μF, C928 0.01

CL943, CL965

C920 0.1μF, C922 0.1μF, C923 0.1μF

R945 82k, C921 22000p, C919 0.1μF

IC904 TC74HC125F — IC904 M.M

C917 0.1 1608, R926 0, PS901 0.8A

CL991, CL990

CN913: 1 GND, 2 VF OUT, 3 EVF 9.5V, 4 TALLY, 5 WIDE

LM0701: S GND — LM0702: S GND

VF-105 BOARD

CN701: 1 GND, 2 VF OUT, 3 EVF 9.5, 4 TALLY, 5 WIDE

J701 — C705 0.01μF, C704 0.01μF, C701 0.01μF

(VIEW FINDER)

A1 SS 5.0V (CN004-58)
A2 SIRCS SIG 2 (CN004-59) 4-3
A3 HP OUT L 4-4
A4 HP GND
A5 HP OUT R 4-5
A6 SIRCS SIG 1 (CN004-57) 4-6
A7 SS 3.3V (CN004-56)
A11 HP VOL 4-10
A12 HP VOL 5V
A13 SP ON/OFF SW 4-11

4 TO (1/2) (SEE PAGE 4-92)

J48 RESET FROM MODE, SS GND, C IN, LANC POWER ON, LANC FROM TULIP, LANC TO TULIP, EVER 3.3V, GND, TBC REN, DRAM BANK, SSP, DATA TO MECHA, DATA FROM MECHA, MECHA SCK, MECHA CS SFY, TACO, FLTO, CHIME GND, CHIME SCK, CHIME SDA, CHIME VDD, SS GND, SS GND, LANC SIO, LANC DC

TO RS-73 BOARD (1/2) CN773 (SEE PAGE 4-67)

·SIGNAL PATH

	VIDEO SIGNAL			AUDIO SIGNAL
	CHROMA	Y	Y/CHROMA	
REC			➡⋙	➡
PB			⇦⋙	⇦

Note:
The components identified by mark ⚠ or dotted line with mark ⚠ are critical for safety.
Replace only with part number specified.

There are few cases that the part printed on this diagram isn't mounted in this model.

VF-105 (EVF CONNECTOR), LI-60 (LITHIUM BATTERY) PRINTED WIRING BOARDS
— Ref. No. VF-105 Board; 1,000 Series, LI-60 Board; 5,000 Series —

VF-105 BOARD (SIDE A)

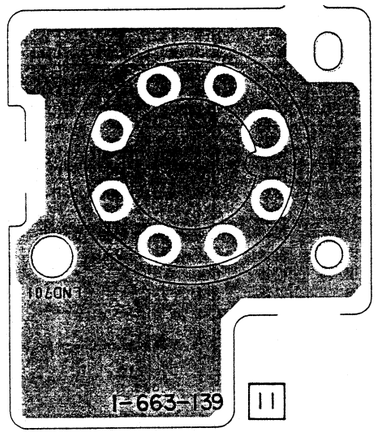

VF-105 BOARD (SIDE B)

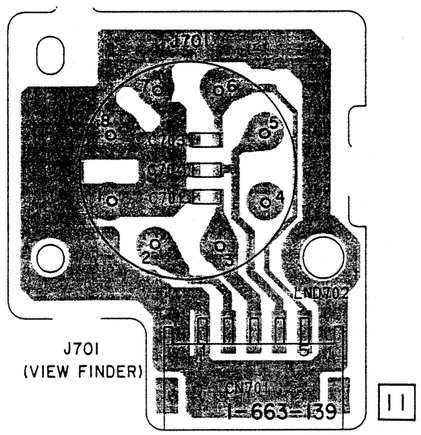

LI-60 BOARD

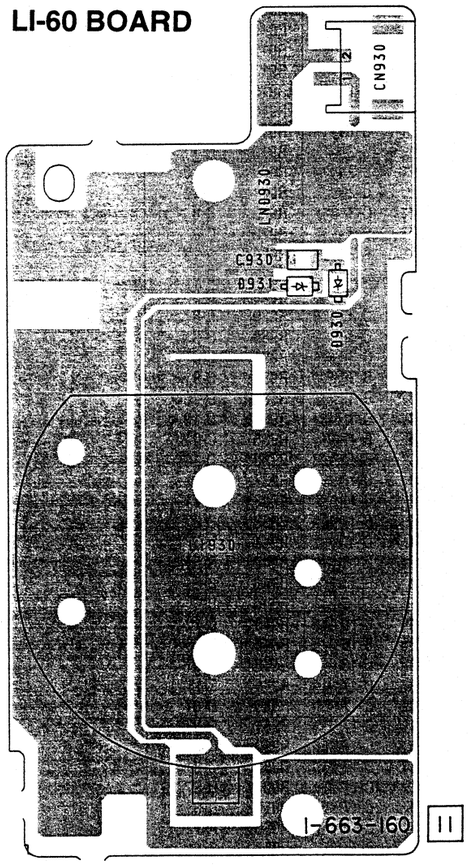

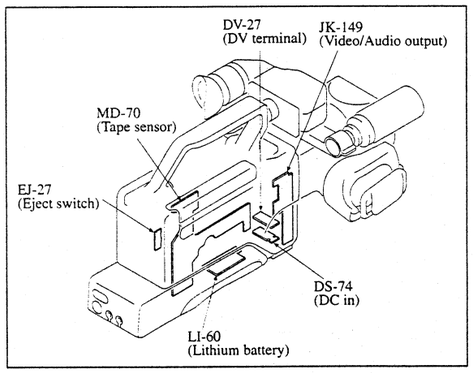

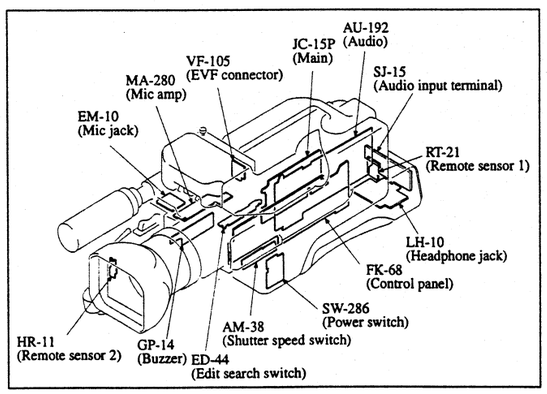

AU-192 BOARD

C002	E-17	C118	D-17	CN901	A-2	Q005	D-1	R058	C-17	R212	C-1	R960	A-13
C003	E-2	C119	D-16	CN902	A-6	Q006	D-2	R061	C-2	R215	C-13	R961	D-8
C012	C-1	C120	C-16	CN906	D-9	Q007	E-16	R062	C-16	R221	C-2	R962	D-8
C013	D-17	C121	C-3	CN907	D-1	Q008	B-3	R064	C-15	R222	C-2	R964	D-8
C014	D-17	C122	B-3	CN908	A-3	Q009	B-3	R065	B-17	R223	C-2	R965	E-11
C015	C-17	C123	B-3	CN909	B-9	Q010	B-3	R069	A-17	R224	C-3	R966	E-11
C016	C-17	C124	C-4	CN911	E-2	Q011	C-4	R071	B-3	R225	C-3	R967	E-11
C017	D-18	C125	B-4	CN912	E-5	Q012	D-4	R072	B-3	R227	C-3	R968	E-11
C018	D-18	C126	C-4	CN913	A-5	Q013	E-3	R073	B-3	R228	C-3	R972	C-10
C019	D-18	C127	C-4	CN914	A-5	Q014	D-16	R074	B-2	R229	C-3		
C020	C-18	C131	D-3	CN915	D-15	Q015	D-16	R075	B-2	R230	C-3	RB002	D-2
C021	D-16	C132	D-3	CN916	E-6	Q017	B-16	R080	E-3	R231	C-3	RB003	C-4
C023	D-16	C133	D-3	CN917	E-9	Q018	B-16	R083	E-3	R232	D-3	RB004	D-4
C024	D-16	C200	C-14	CN918	E-2	Q019	D-2	R084	E-3	R242	C-4		
C025	D-17	C201	D-18	CN919	C-9	Q902	B-8	R085	D-3	R243	C-4	RV001	B-6
C026	D-16	C202	D-18			Q903	C-8	R091	D-16	R244	C-4	RV002	C-7
C027	C-17	C203	D-18	D001	D-18	Q904	B-8	R092	D-16	R245	C-4		
C028	C-1	C206	D-17	D003	C-18	Q905	C-8	R098	C-16	R246	C-4		
C031	C-16	C207	C-17	D004	D-16	Q906	C-8	R099	C-16	R247	C-4		
C032	C-16	C208	C-17	D006	C-16	Q907	B-8	R100	D-17	R248	C-4		
C033	C-16	C209	C-17	D010	C-1	Q908	B-13	R102	D-17	R249	C-4		
C034	C-16	C210	C-2	D011	C-2	Q909	E-14	R103	C-18	R251	E-3		
C035	C-2	C211	C-2	D012	C-2	Q910	B-8	R104	C-18	R252	E-3		
C036	C-2	C212	C-3	D013	C-2			R105	C-18	R253	E-3		
C037	C-2	C213	C-3	D014	D-16	R001	D-1	R106	C-17	R902	A-3		
C041	C-3	C214	C-3	D015	B-16	R002	D-17	R107	C-18	R905	A-3		
C042	C-3	C215	C-3	D021	B-3	R003	E-17	R108	C-18	R909	C-11		
C043	B-16	C216	C-3	D022	B-3	R004	E-17	R109	C-1	R910	C-11		
C044	B-16	C217	D-3	D023	B-2	R005	E-17	R110	C-1	R912	C-11		
C045	B-16	C218	D-18	D901	B-8	R006	D-2	R111	C-1	R913	C-11		
C046	B-16	C219	D-16			R009	D-2	R112	C-1	R915	C-11		
C047	A-18	C221	C-3	IC002	E-17	R011	D-2	R115	B-14	R916	C-10		
C048	A-1	C222	C-4	IC003	E-17	R012	D-16	R116	C-13	R918	C-10		
C051	B-3	C223	C-4	IC004	D-2	R016	C-13	R121	C-2	R919	C-11		
C052	B-2	C224	C-4	IC005	D-17	R017	C-13	R122	C-2	R920	C-10		
C053	C-4	C225	C-4	IC006	D-16	R021	D-17	R123	C-2	R921	C-10		
C061	D-3	C226	C-4	IC007	C-1	R022	C-17	R124	C-3	R922	B-8		
C062	D-3	C227	C-4	IC008	C-18	R023	C-17	R125	C-3	R923	C-9		
C063	E-3	C231	D-3	IC009	C-17	R024	D-18	R127	C-3	R926	A-13		
C064	E-3	C232	D-3	IC010	C-18	R025	D-18	R128	C-3	R927	B-8		
C065	E-3	C233	D-3	IC011	C-2	R026	D-18	R129	C-3	R928	C-8		
C066	E-3	C901	C-11	IC012	C-3	R027	C-18	R130	C-3	R929	B-8		
C067	D-3	C902	C-11	IC014	B-17	R028	C-18	R131	C-3	R930	B-8		
C068	D-3	C903	C-10	IC015	C-4	R029	C-18	R132	C-3	R931	C-8		
C069	B-2	C905	C-10	IC016	D-4	R031	C-16	R142	B-3	R932	C-8		
C071	E-3	C906	C-10	IC017	D-3	R033	D-17	R143	B-3	R933	D-10		
C072	D-16	C907	C-10	IC018	B-2	R034	D-17	R144	C-3	R934	D-10		
C074	B-16	C908	C-8	IC901	C-11	R035	D-16	R145	B-4	R935	C-8		
C080	C-16	C911	B-11	IC902	B-13	R036	C-16	R146	B-4	R936	D-10		
C081	C-16	C912	B-11	IC904	B-12	R037	C-16	R147	C-4	R937	B-8		
C091	D-3	C914	C-8	IC905	B-12	R038	C-17	R148	C-4	R938	C-11		
C100	B-14	C916	C-8	IC906	D-11	R039	C-1	R149	C-4	R939	B-8		
C101	D-17	C917	A-12	IC907	A-13	R040	D-1	R151	D-4	R941	B-6		
C102	D-17	C918	B-9			R041	C-17	R152	E-15	R942	B-6		
C103	D-17	C919	B-12	L001	C-16	R043	D-1	R153	E-3	R943	B-6		
C104	D-16	C920	B-6	L002	D-2	R044	D-1	R161	E-16	R944	B-6		
C105	D-16	C921	B-12	L003	C-3	R045	D-1	R162	B-16	R945	B-12		
C106	D-16	C922	B-6	L004	B-16	R046	D-1	R163	B-16	R946	A-13		
C107	C-18	C923	B-6	L005	B-16	R047	D-1	R200	D-18	R948	D-8		
C108	C-18	C924	A-14	L006	B-16	R048	D-1	R202	D-17	R949	E-11		
C109	C-18	C925	B-12	L901	B-10	R049	D-2	R203	C-17	R950	D-8		
C110	C-2	C926	D-11	L903	B-10	R050	D-2	R204	C-17	R951	D-8		
C111	C-2	C927	A-13	L904	B-11	R051	D-2	R205	C-17	R952	D-8		
C112	C-3	C928	B-12	L905	D-11	R052	D-2	R206	C-17	R953	D-8		
C113	C-3	C929	A-13			R053	D-2	R207	C-17	R954	D-8		
C114	C-3	C930	B-13	PS901	A-5	R054	D-2	R208	C-17	R955	D-8		
C115	C-3					R055	D-3	R209	C-1	R956	A-12		
C116	C-3	CN002	C-1	Q003	D-2	R056	C-1	R210	C-1	R957	E-11		
C117	C-3	CN004	B-15	Q004	C-18	R057	C-1	R211	C-1	R959	B-12		

AU-192 (AUDIO) PRINTED WIRING BOARD

— Ref. No. AU-192 Board; 2,000 Series —

There are few cases that the part printed on this diagram isn't mounted in this model.

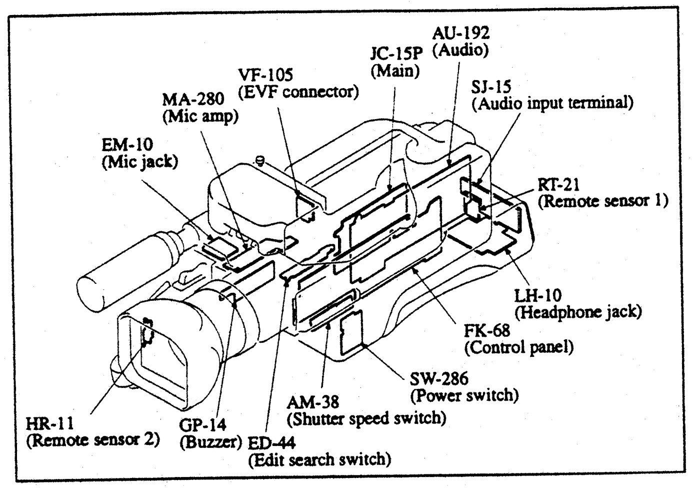

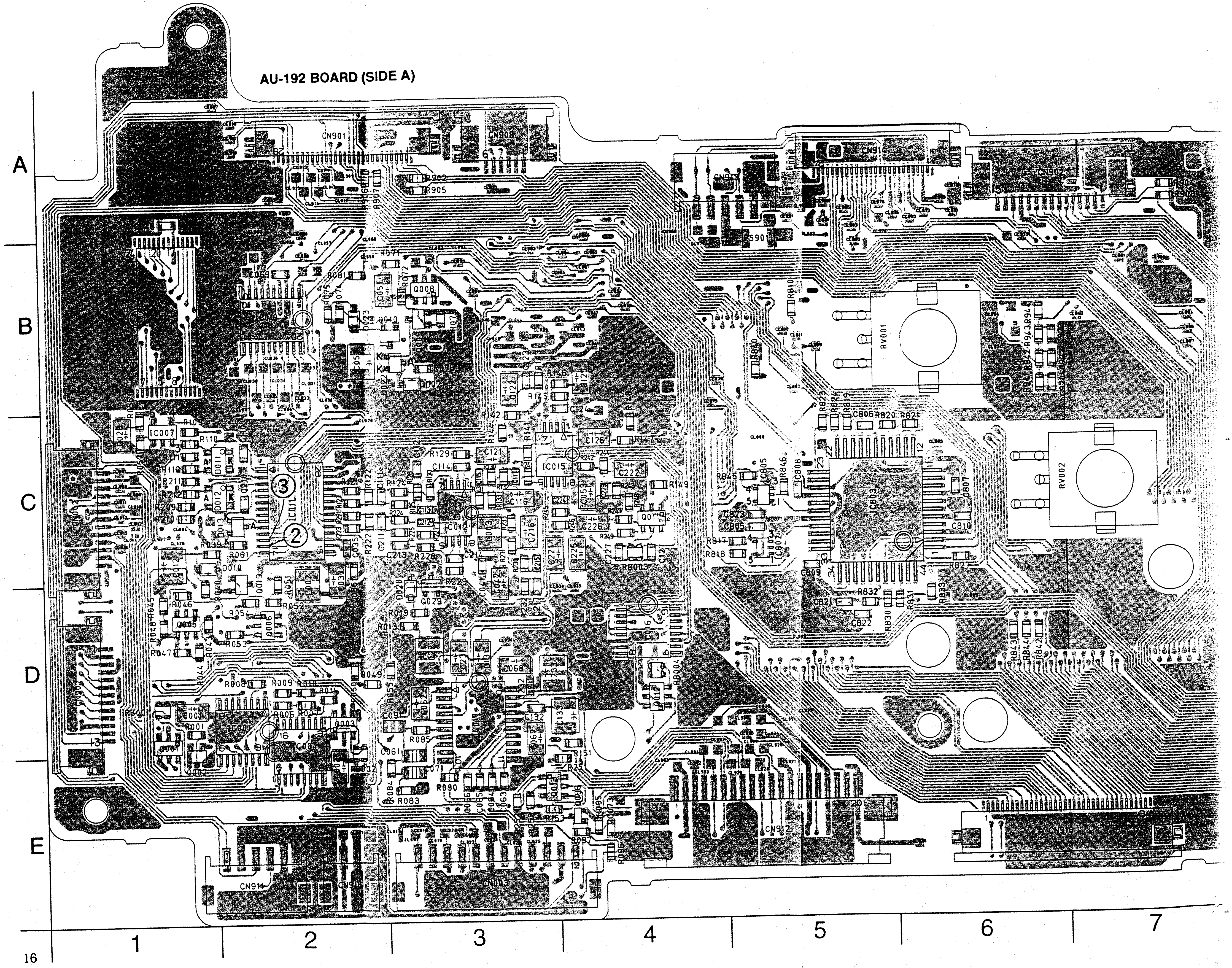

AU-192 BOARD (SIDE B)

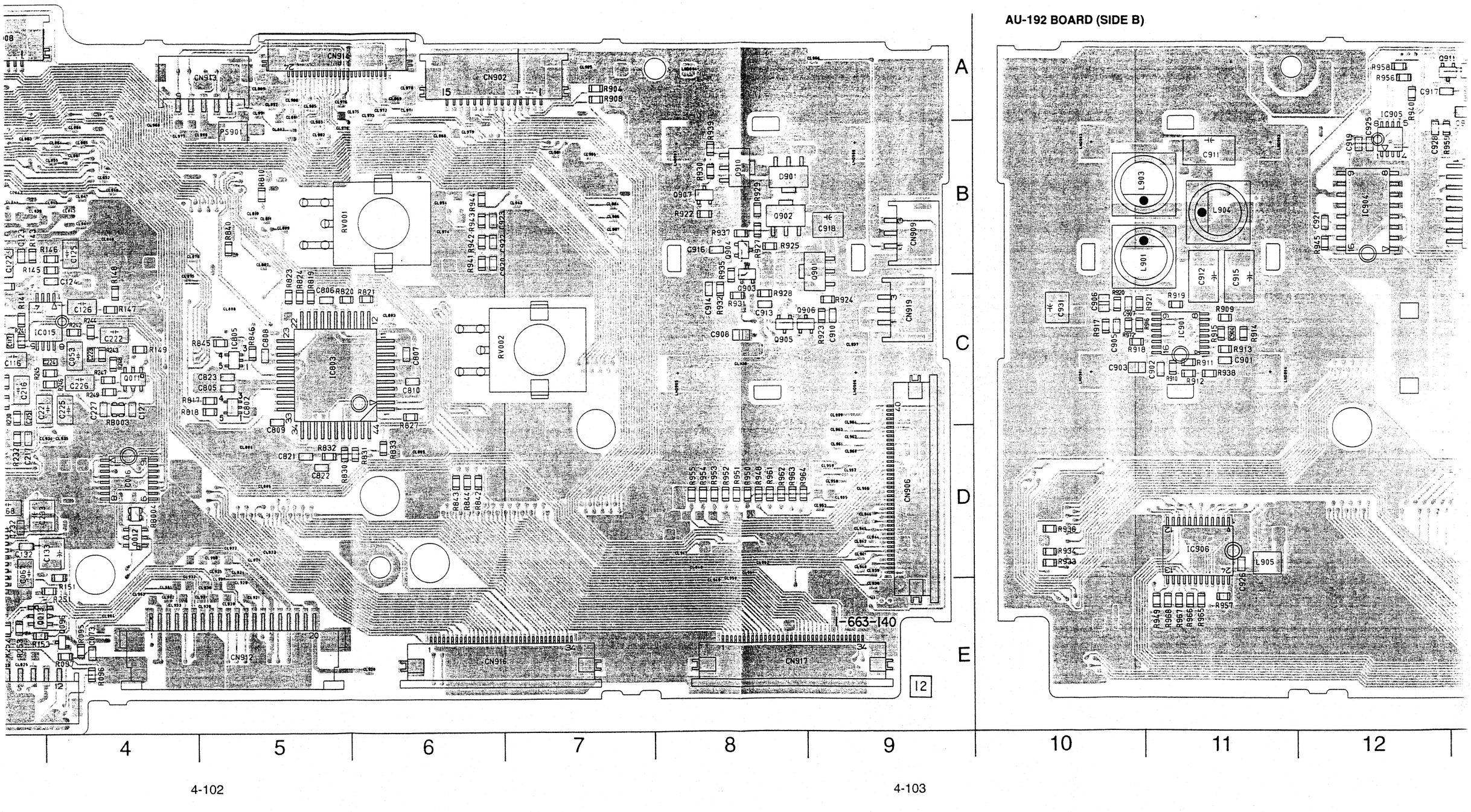

AU-192 BOARD (SIDE B)

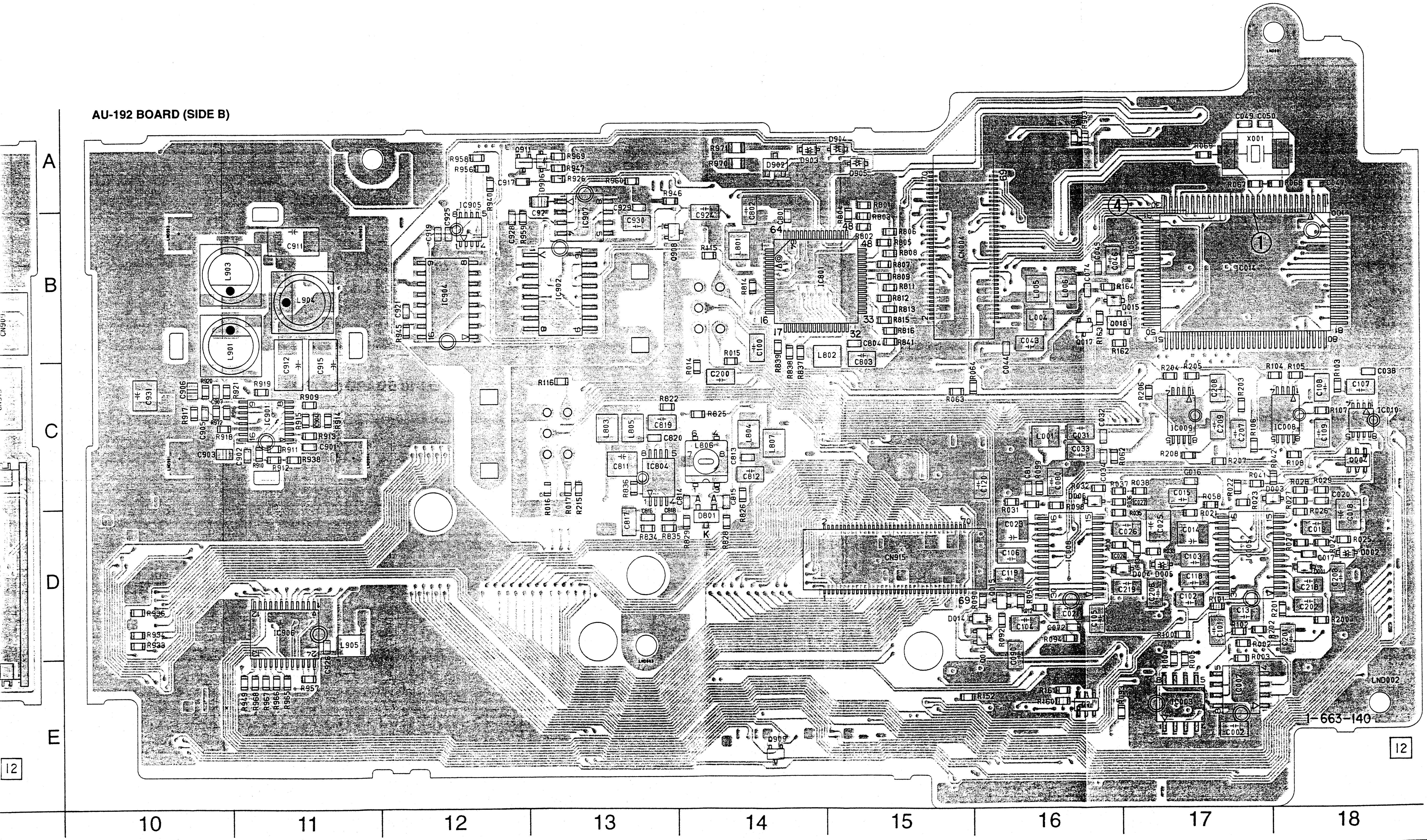

AUDIO
AU-192

JK-149 (VIDEO/AUDIO OUTPUT), EM-10 (MIC JACK), MA-280 (MIC AMP) PRINTED WIRING BOARDS
— Ref. No. JK-149 Board; 4,000 Series, EM-10, MA-280 Board; 2,000 Series —

There are few cases that the part printed on this diagram isn't mounted in this model.

JK-149 BOARD (SIDE A)

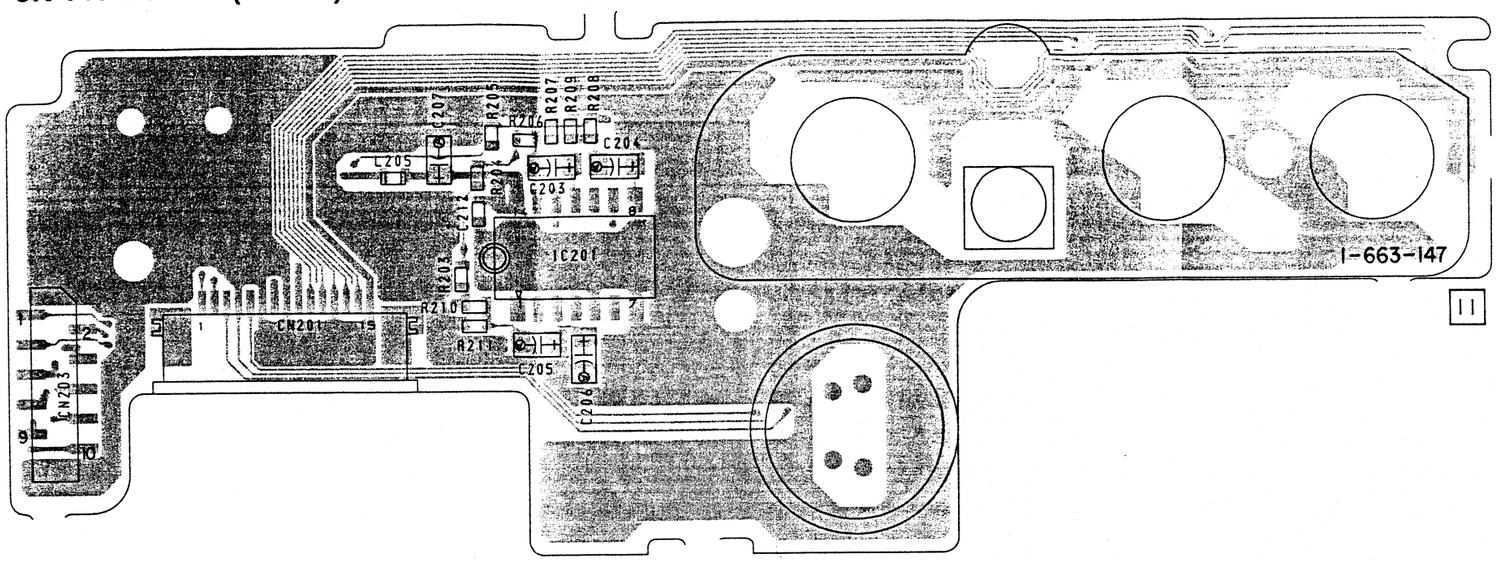

EM-10 BOARD (SIDE A)

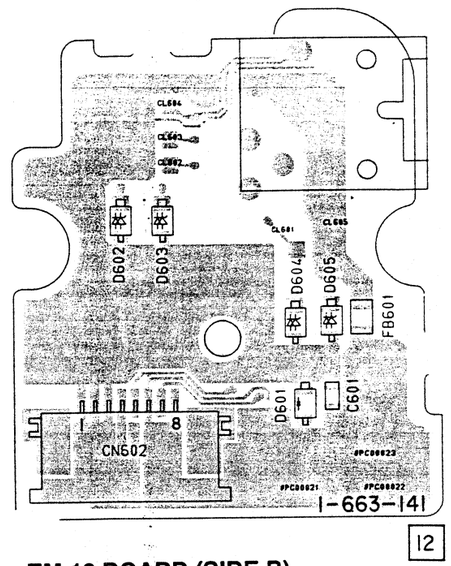

EM-10 BOARD (SIDE B)

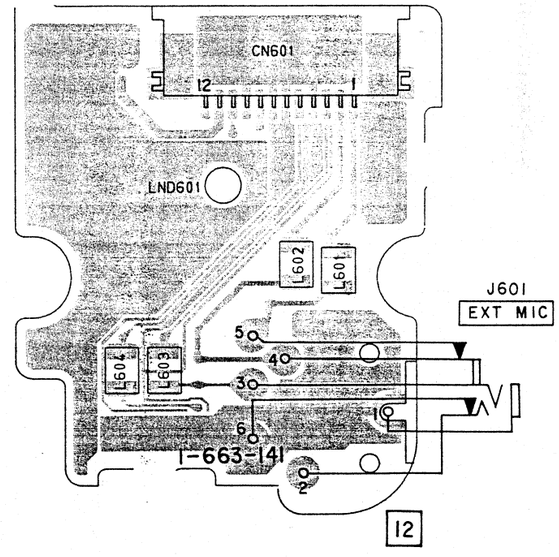

JK-149 BOARD (SIDE B)

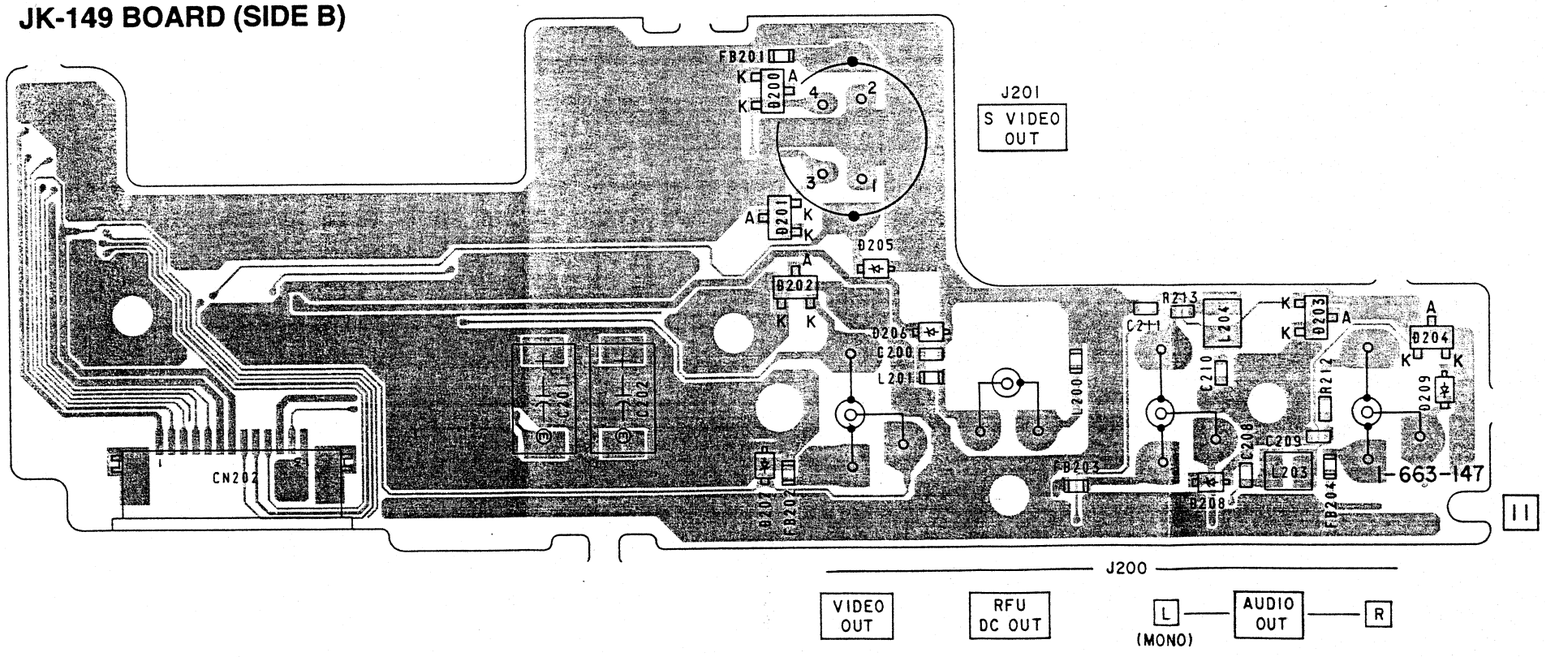

nted in this model.

EM-10 BOARD (SIDE A)

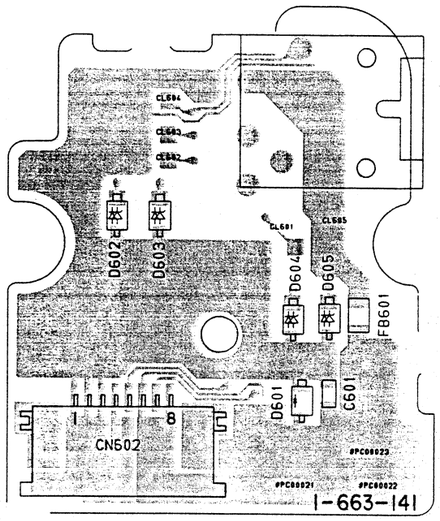

EM-10 BOARD (SIDE B)

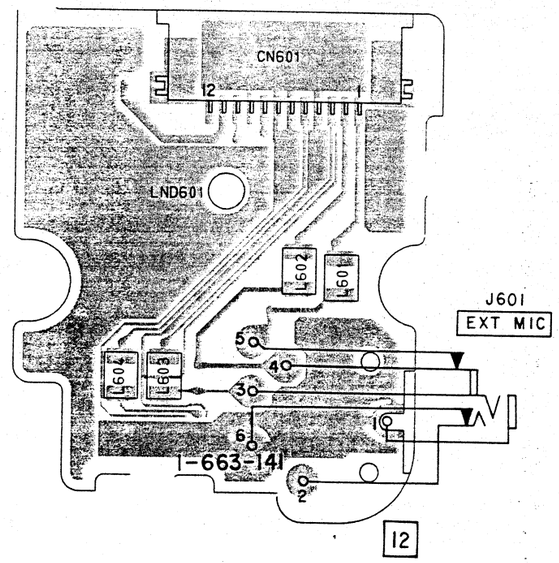

MA-280 BOARD (SIDE A)

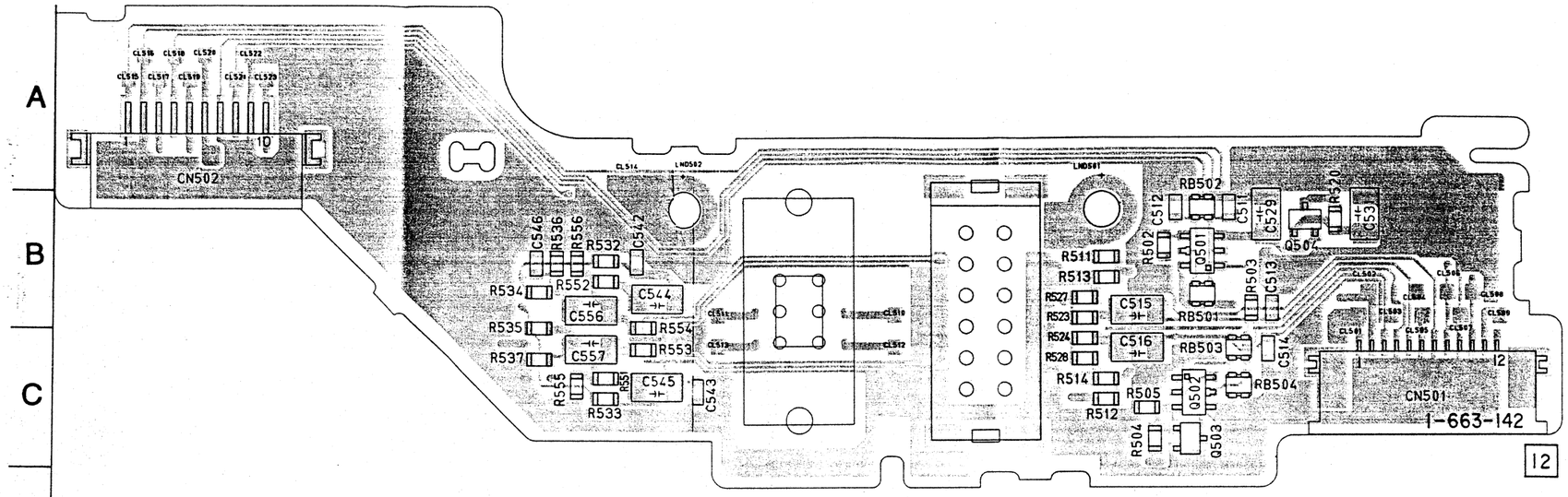

MA-280 BOARD (SIDE B)

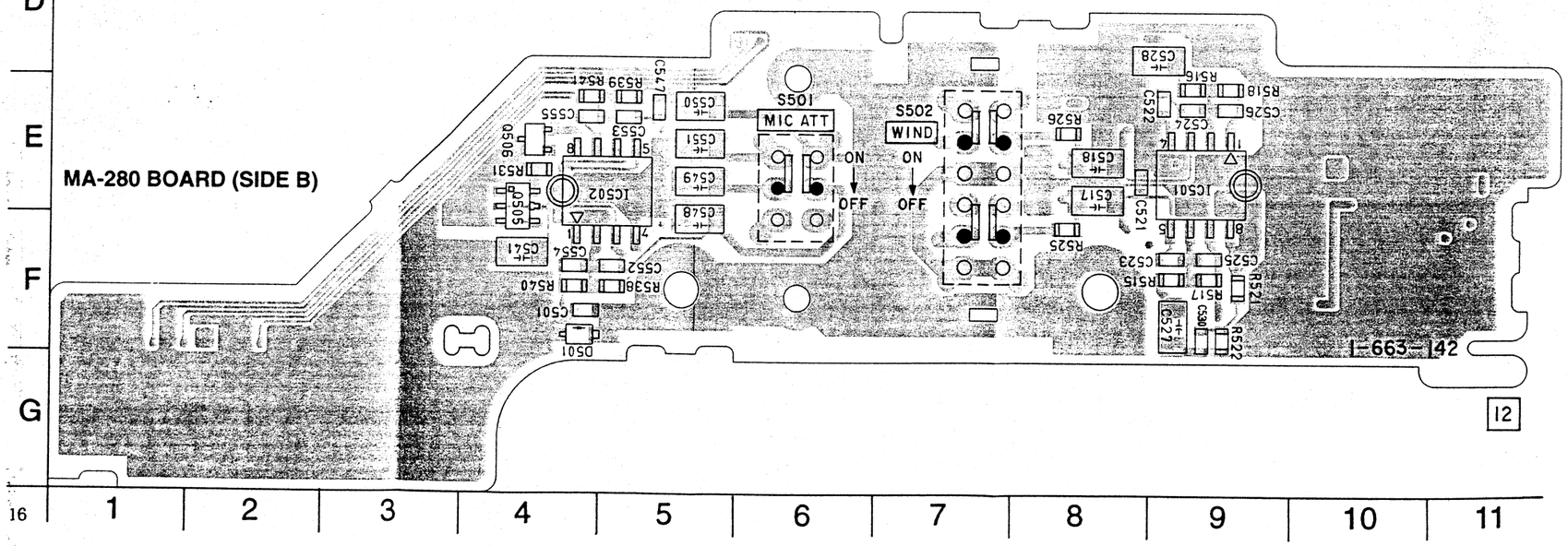

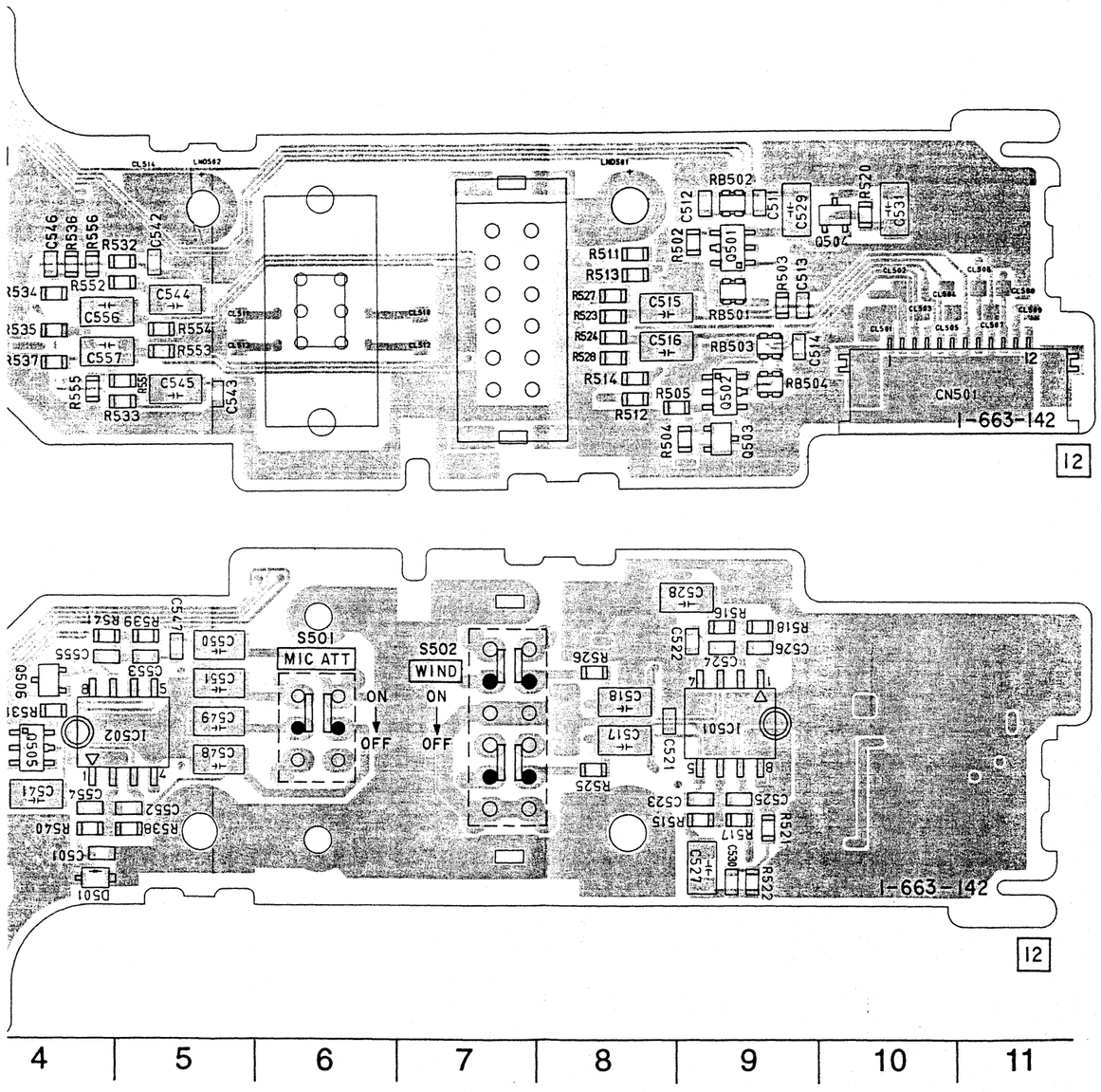

MA-280 BOARD

C511	B-9	D501	F-4	R536	B-4
C512	B-9			R537	C-4
C513	B-9	IC501	E-9	R538	F-5
C514	C-9	IC502	E-5	R539	E-5
C515	B-8			R540	F-4
C516	C-8	Q501	B-9	R541	E-4
C517	E-8	Q502	C-9	R551	C-5
C518	E-8	Q503	C-9	R552	B-5
C521	E-9	Q504	B-10	R553	C-5
C522	E-9	Q505	E-4	R554	B-5
C523	F-9	Q506	E-4	R555	C-4
C524	E-9			R556	B-4
C525	F-9	R502	B-9		
C526	E-9	R503	B-9	RB501	B-9
C527	F-9	R504	C-9	RB502	B-9
C528	D-9	R505	C-8	RB503	C-9
C530	F-9	R511	B-8	RB504	C-9
C531	B-10	R512	C-8		
C541	F-4	R513	B-8	S501	E-6
C542	B-5	R514	C-8	S502	E-7
C543	C-5	R515	F-9		
C544	B-5	R516	D-9		
C545	C-5	R517	F-9		
C546	B-4	R518	D-9		
C547	E-5	R520	B-10		
C548	E-5	R521	F-9		
C549	E-5	R522	F-9		
C550	E-5	R523	B-8		
C551	E-5	R524	C-8		
C552	F-5	R525	F-8		
C553	E-5	R526	E-8		
C554	F-4	R527	B-8		
C555	E-4	R528	C-8		
C556	B-4	R531	E-4		
C557	C-4	R532	B-5		
		R533	C-5		
CN501	C-11	R534	B-4		
CN502	A-2	R535	B-4		

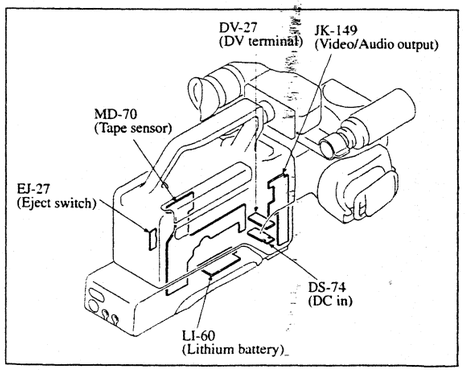

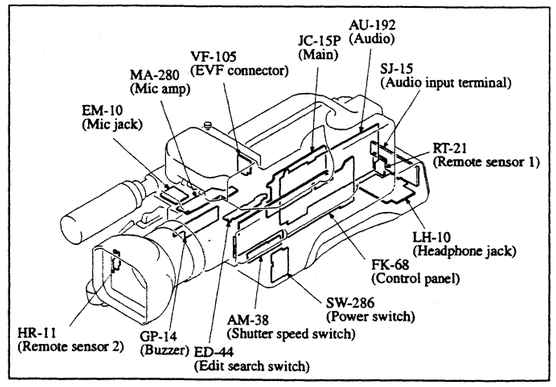

There are few case

FS-78 BOARD (SIDE A)

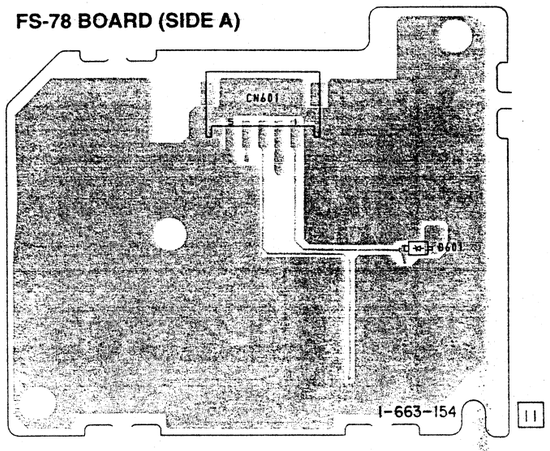

FS-78 BOARD (SIDE B)

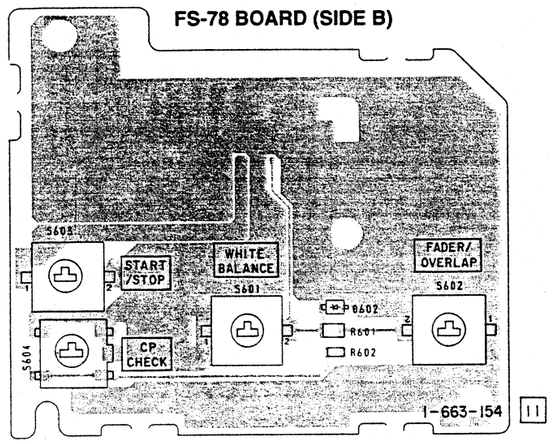

HR-11 BOARD

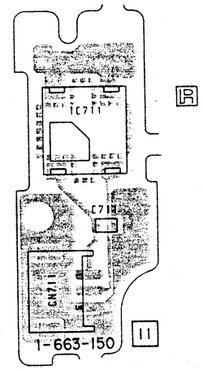

LH-10 BOARD (SIDE A)

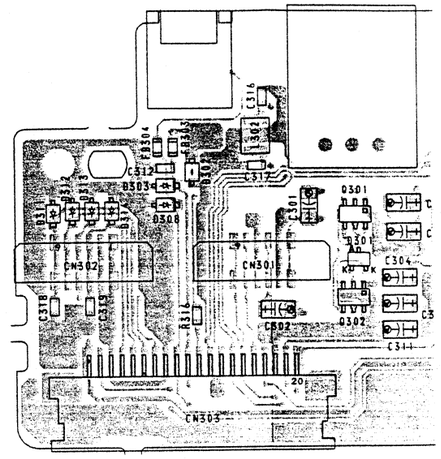

LI-60 BOARD (SIDE B)

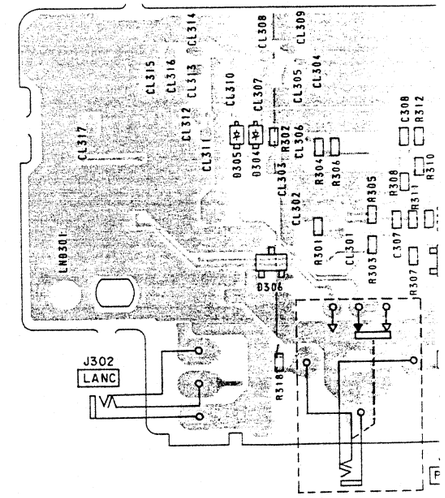

RT-21 BOARD (SIDE A)

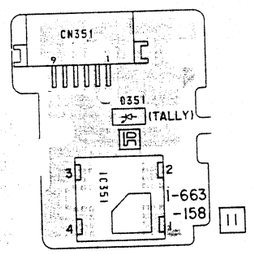

RT-21 BOARD (SIDE B)

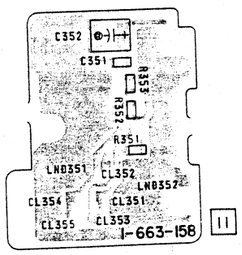

EJ-27 BOARD (SIDE A)

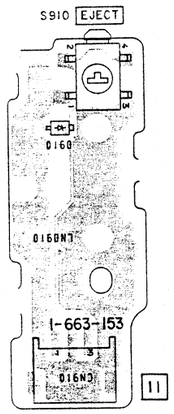

EJ-27 BOARD (SIDE B)

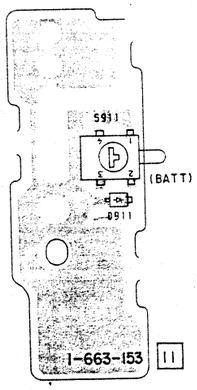

SJ-15 BOARD

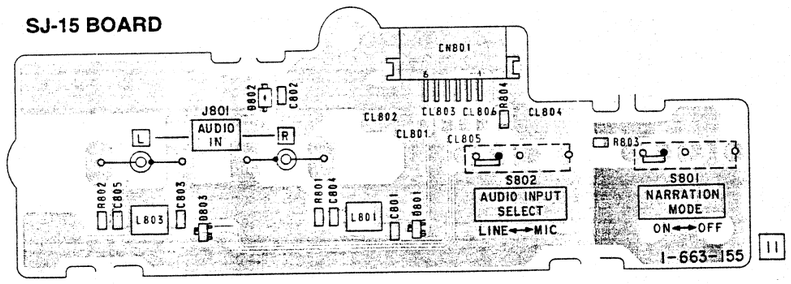

NG BOARDS There are few cases that the part printed on this diagram isn't mounted in this model.

)ARD (SIDE A)

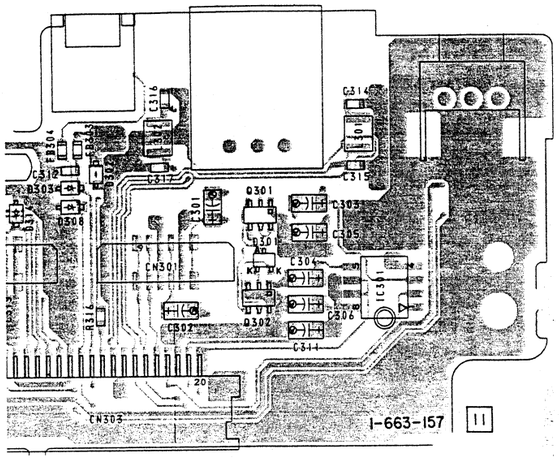

)ARD (SIDE B)

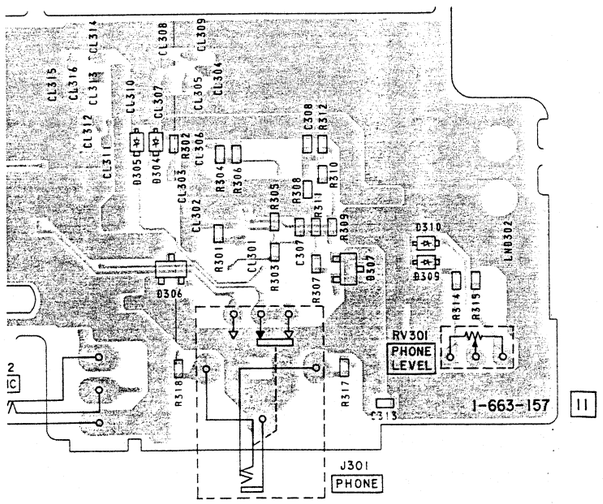

VK-41P BOARD (SIDE A)

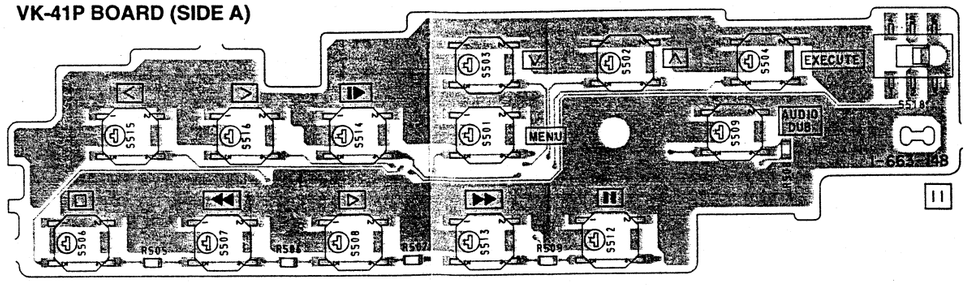

VK-41P BOARD (SIDE B)

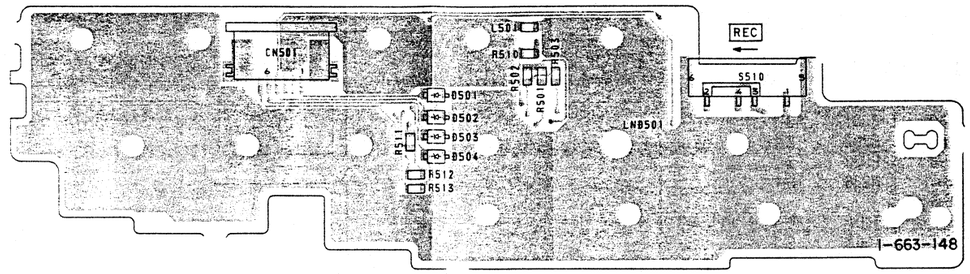

GP-14 BOARD (SIDE A)

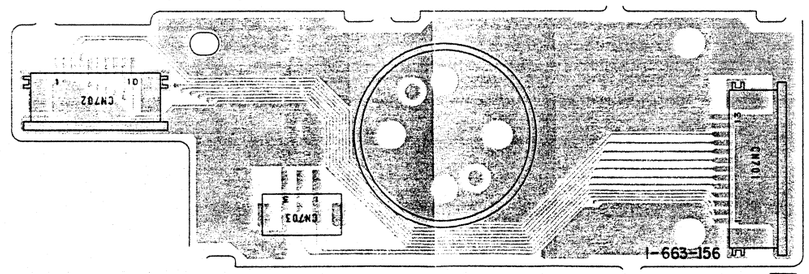

GP-14 BOARD (SIDE B)

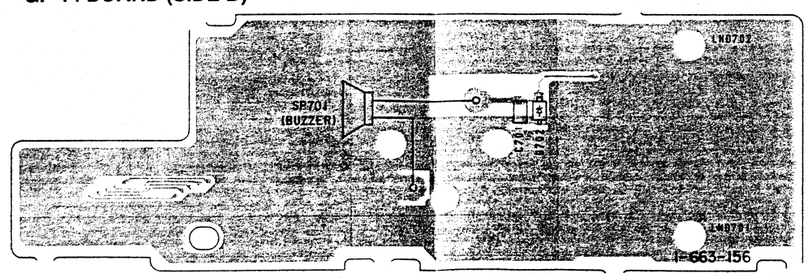

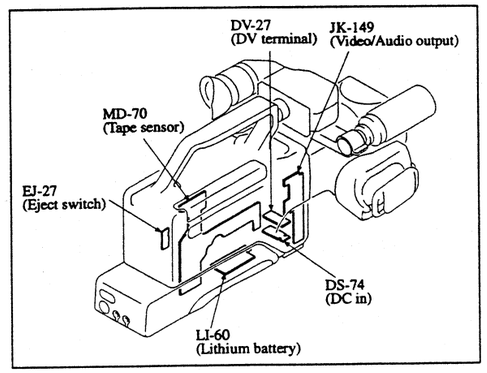

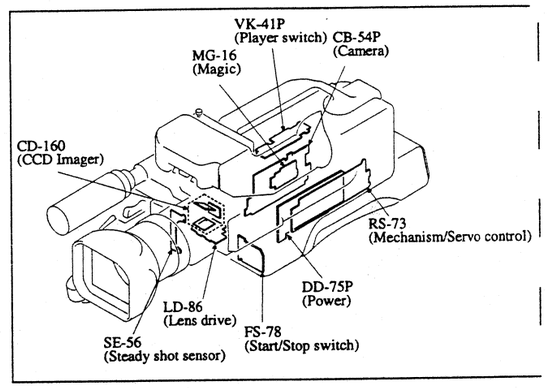

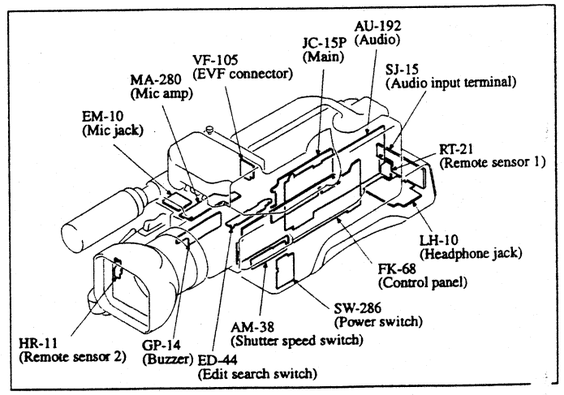

D-75P (POWER), DS-74 (DC IN) PRINTED WIRING BOARDS

Ref. No. DD-75P Board; 6,000 Series, DS-74 Board; 4,000 Series —

There are few cases that the part printed on this diagram isn't mounted in this model.

D-75P BOARD

D1	B-6	C066	F-3	L005	A-6	Q029	A-3	R048	A-7	R208	B-1
D2	F-6	C067	F-3	L006	E-6	Q200	E-1	R049	E-8	R209	B-1
D3	F-6	C068	D-8	L007	A-5	Q201	E-1	R050	E-7	R210	B-1
D4	B-6	C069	D-7	L008	A-6	Q203	F-1	R051	B-7	R211	A-1
D5	B-6	C070	B-7	L009	E-6	Q204	B-1	R052	B-7	R212	B-1
D6	B-6	C071	B-8	L010	D-6	Q205	A-1	R053	A-8	R213	B-2
D7	B-5	C072	D-8	L011	F-6	Q206	B-1	R054	B-8	R214	B-2
D8	B-4	C073	D-7	L012	F-6	Q207	B-1	R055	B-8	R215	A-1
D9	D-4	C074	B-7	L013	F-6	Q208	F-1	R056	B-7	R216	F-1
D10	B-3	C075	B-7	L014	E-6	Q209	D-1	R057	B-8	R217	D-1
D11	A-6	C076	B-8	L015	F-6	Q210	B-2	R058	B-7	R218	B-1
D12	A-6	C077	F-3	L016	E-5	Q211	A-1	R059	C-7	R219	A-1
D13	A-6	C078	F-3	L017	D-5	Q213	A-1	R060	C-7	R220	D-1
D14	A-5	C079	B-3	L018	E-4	Q214	D-1	R061	C-8	R221	B-1
D15	A-7	C080	D-8	L019	E-5	Q215	A-1	R062	B-7	R222	B-1
D16	F-7	C081	B-3	L020	E-5	Q216	B-1	R063	B-7	R223	A-1
D17	F-7	C082	E-7	L021	E-5	Q217	B-1	R064	B-8	R224	D-1
D18	F-7	C083	E-8	L022	F-5			R065	B-7	R225	B-2
D19	B-5	C084	A-3	L023	F-4	R001	A-5	R066	B-7	R226	B-2
D20	F-7	C085	A-3	L024	F-4	R002	A-5	R067	B-7	R227	B-2
D21	F-8	C086	E-7	L025	E-4	R003	A-7	R068	B-8	R228	D-1
D22	B-6	C087	E-8	L026	D-4	R004	F-7	R069	B-8	R230	B-2
D23	A-8	C088	B-7	L027	F-3	R005	F-7	R070	C-8	R231	B-1
D24	F-7	C089	B-2	L028	F-3	R006	A-7	R071	B-7	R232	E-1
D25	F-7	C090	E-7	L029	E-4	R007	A-8	R072	B-8	R233	B-2
D26	F-8	C091	B-7	L030	F-3	R008	A-7	R073	B-7	R236	F-1
D27	F-8	C092	B-8	L031	F-3	R009	A-7	R074	E-8		
D28	A-7	C093	E-7	L032	E-3	R010	A-7	R075	E-7	T001	E-4
D29	A-5	C094	F-3	L033	D-3	R011	A-7	R076	B-7	T002	E-3
D30	F-5	C095	B-7	L034	E-3	R012	A-7	R077	B-8		
D31	F-5	C096	B-3	L035	D-3	R013	F-8	R078	B-7		
D32	F-5	C097	B-7	L036	F-3	R014	A-7	R079	B-8		
D33	F-5	C098	B-2	L037	E-3	R015	A-7	R080	B-7		
D34	F-7	C099	B-2			R016	A-8	R081	B-8		
D35	E-8	C100	B-2	PS001	A-5	R017	A-7	R082	B-7		
D36	E-7	C101	B-7	PS002	A-4	R018	A-8	R083	E-8		
D37	E-7	C102	E-8			R019	E-7	R084	B-7		
D38	A-5	C103	F-5	Q001	B-6	R020	E-8	R085	B-8		
D39	B-5	C201	B-2	Q002	B-6	R021	A-7	R086	B-8		
D40	B-4			Q003	B-6	R022	A-7	R087	B-8		
D41	A-5	CN001	A-5	Q004	B-6	R023	A-7	R088	B-8		
D42	E-8	CN002	A-3	Q005	A-6	R024	A-8	R089	E-7		
D43	E-7	CN003	A-2	Q006	B-6	R025	A-7	R090	E-8		
D44	A-7	CN200	C-1	Q007	A-5	R026	B-8	R091	B-7		
D45	E-7	CN201	A-1	Q008	B-6	R027	E-7	R092	B-7		
D46	A-7			Q009	F-5	R028	A-7	R093	B-8		
D47	B-7	D001	A-5	Q010	A-5	R029	A-8	R094	B-8		
D48	B-5	D002	B-5	Q011	F-5	R030	A-7	R095	E-7		
D49	E-8	D003	A-2	Q012	F-4	R031	F-5	R096	B-8		
D50	E-7	D202	B-1	Q013	F-5	R032	F-5	R097	B-8		
D51	E-7	D203	B-2	Q014	B-5	R033	A-8	R098	B-7		
D52	A-7	D204	E-1	Q015	B-5	R034	B-7	R099	B-7		
D53	B-5	D205	A-1	Q016	B-4	R035	B-7	R100	B-7		
D54	F-5	D206	B-1	Q017	B-4	R036	B-7	R101	B-7		
D55	E-5	D207	D-1	Q018	A-4	R037	A-5	R102	A-7		
D56	E-5	D208	D-1	Q019	A-4	R038	F-5	R103	E-5		
D57	B-4			Q020	B-3	R039	F-5	R105	A-7		
D58	F-4	IC001	E-7	Q021	A-3	R040	B-7	R106	A-2		
D59	F-4	IC002	D-7	Q022	A-3	R041	A-7	R200	E-1		
D60	B-4	IC200	B-1	Q023	B-3	R042	E-8	R201	F-1		
D61	C-7			Q024	C-7	R043	E-7	R202	F-1		
D62	D-7	L001	F-6	Q025	B-7	R044	B-7	R204	B-1		
D63	D-7	L002	F-6	Q026	A-7	R045	B-4	R205	A-2		
D64	C-7	L003	E-6	Q027	A-7	R046	A-5	R206	A-1		
D65	A-4	L004	D-6	Q028	B-7	R047	A-7	R207	B-1		

ER / DC IN
iP / DS-74

DD-75P BOARD (SIDE A)

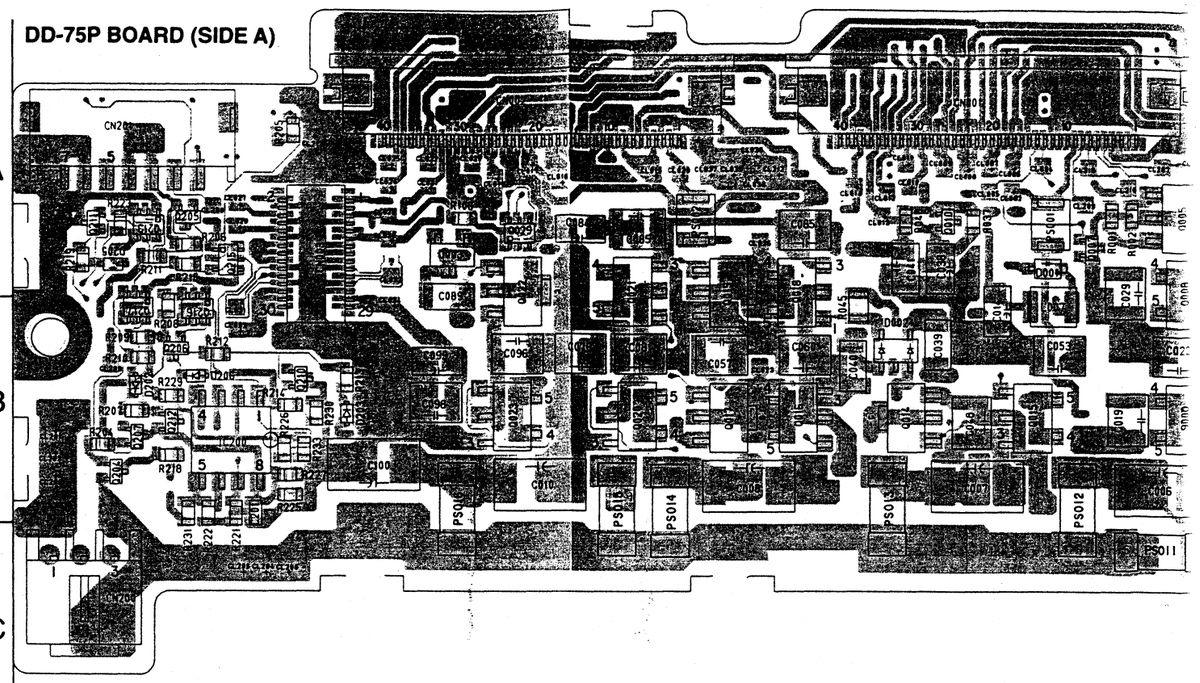

DD-75P BOARD (SIDE B)

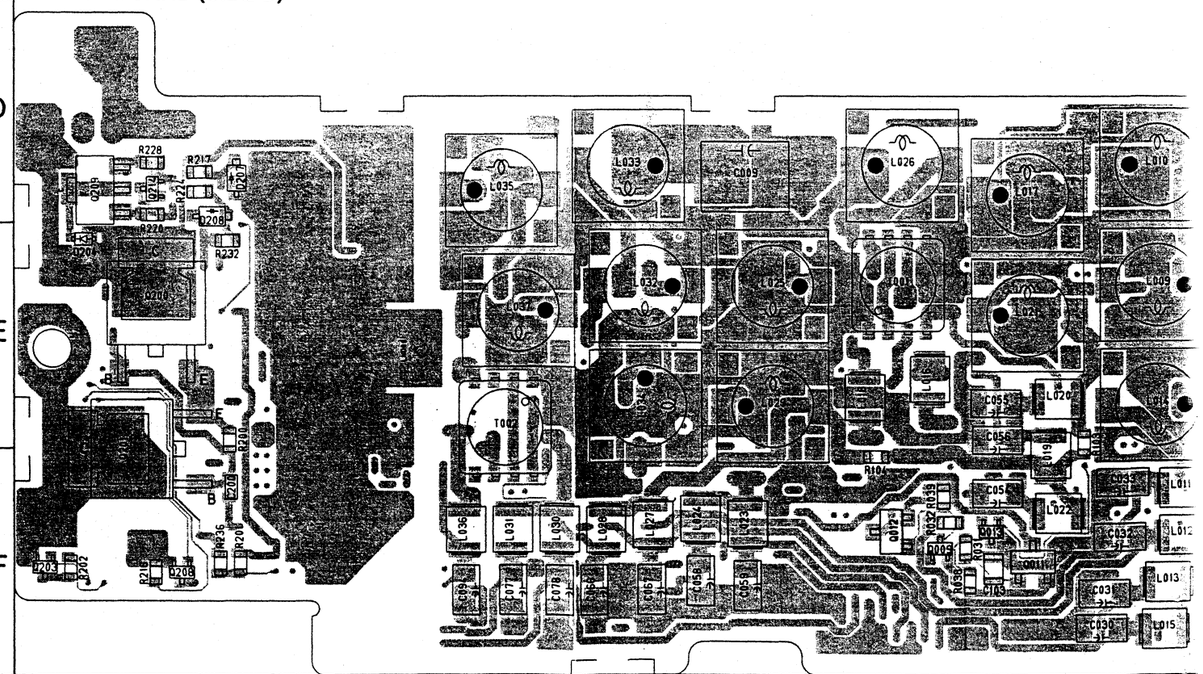

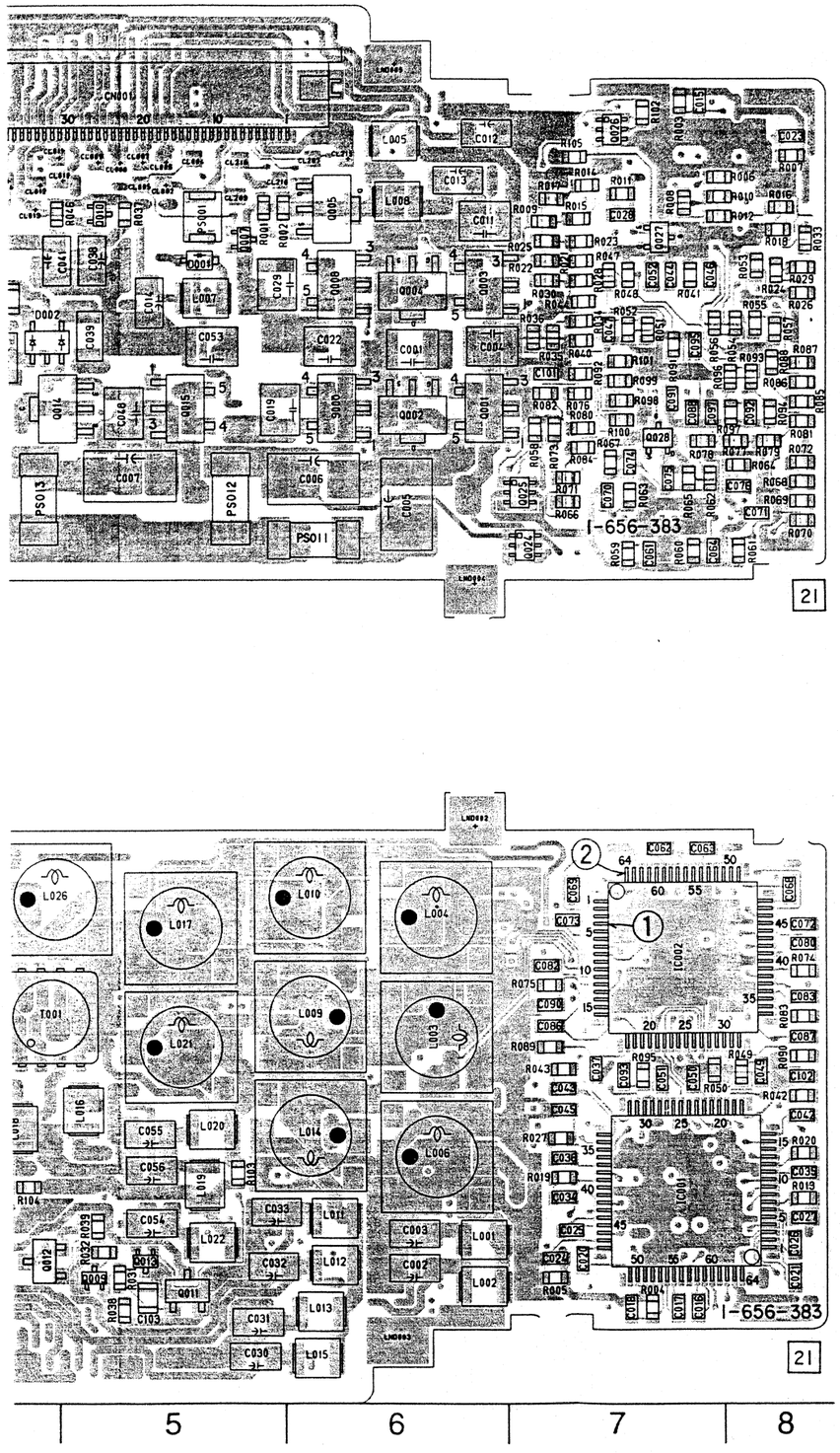
CN004
30
20
10
L005
C012
C013
L008
C011
R009
R025
R022
Q004
Q003
C029
L007
Q002
C053
C022
C001
C007
C010
C019
Q005
Q006
Q001
C048
C049
C039
C041
C040
C042
C043
C044
C045
C046
C047
C052
C050
C051
C054
C055
C056
C057
C058
C059
C060
C061
C062
C063
C064
C065
C066
C067
C068
C069
C070
C071
C072
C073
C074
C075
C076
C077
C078
C079
C080
C081
C082
C083
C084
C085
C086
C087
C088
C089
C090
C091
C092
C093
C094
C095
C096
C097
C098
C099
C100
C101
C102
R001
R002
R003
R004
R005
R006
R007
R008
R010
R011
R012
R013
R014
R015
R016
R017
R018
R019
R020
R021
R023
R024
R026
R027
R028
R029
R030
R031
R032
R033
R034
R035
R036
R037
R039
R040
R041
R042
R043
R044
R045
R046
R047
R048
R049
R050
R051
R052
R053
R054
R055
R056
R057
R058
R059
R060
R061
R062
R063
R064
R065
R066
R067
R068
R069
R070
R071
R072
R073
R074
R075
R076
R077
R078
R079
R080
R081
R082
R083
R084
R085
R086
R087
R088
R089
R090
R091
R092
R093
R094
R095
R096
R097
R098
R099
R100
R101
R102
R103
R105
R106
Q007
Q008
Q009
Q010
Q011
Q012
Q013
Q014
Q015
Q016
Q017
Q018
Q019
Q020
Q021
Q022
Q023
Q024
Q025
Q026
Q027
Q028
PS001
PS002
PS003
PS004
PS005
PS006
PS007
PS008
PS009
PS010
PS011
PS012
PS013
I-656-383
21

L026
L017
L010
L004
T001
L021
L009
L003
L016
L020
L014
L006
C055
C056
C033
L011
C003
L001
C054
L022
C032
L012
C002
L002
C031
L013
C030
L015
R104
Q012
Q011
C103
R038
R039
R032
R033
R009
C013
C062
C063
C064
C065
C066
C067
C068
C069
C070
C071
C072
C073
C074
C075
C076
C077
C078
C079
C080
C081
C082
C083
C084
C085
C086
C087
C088
C089
C090
C091
C092
C093
C094
C095
C096
C097
C098
C099
C100
C101
C102
R075
R089
R043
R095
R049
R050
R042
R027
R019
R020
R021
R084
R085
R086
R087
R088
R091
R092
R093
R094
R096
R097
R098
R099
R100
R101
R102
R103
R105
R106
Q007
Q008
Q009
Q010
Q013
Q014
Q015
Q016
Q017
Q018
Q019
Q020
Q021
Q022
Q023
Q024
Q025
Q026
Q027
Q028
IC002
IC001
I-656-383
21
5
6
7
8

DS-74 BOARD (SIDE A)

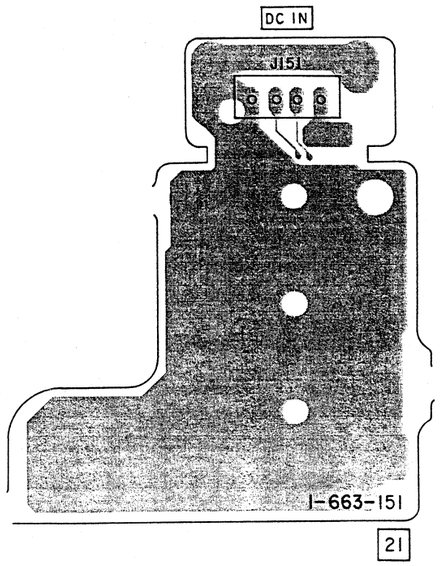

DS-74 BOARD (SIDE B)

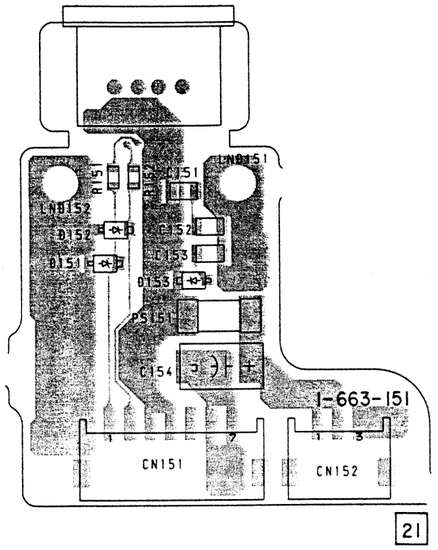

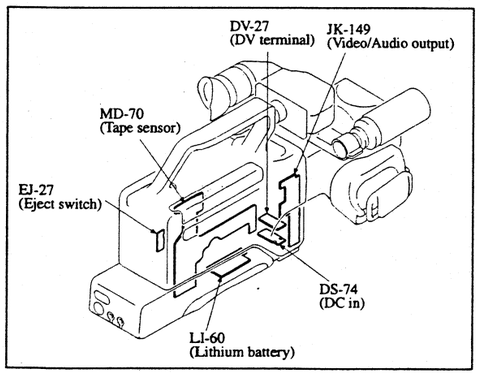

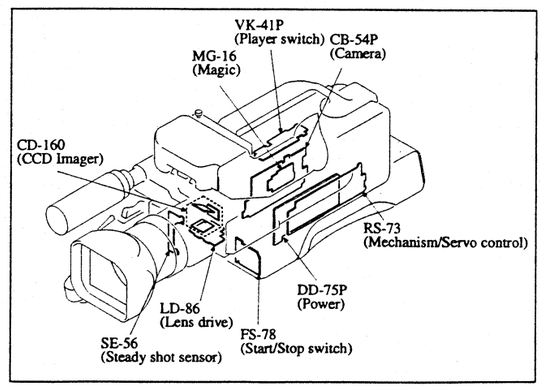

DD-75P (POWER), DS-74 (DC IN) SCHEMATIC DIAGRAMS

— Ref. No. DD-75P Board: 6,000 Series, DS-74 Board: 4,000 Series —

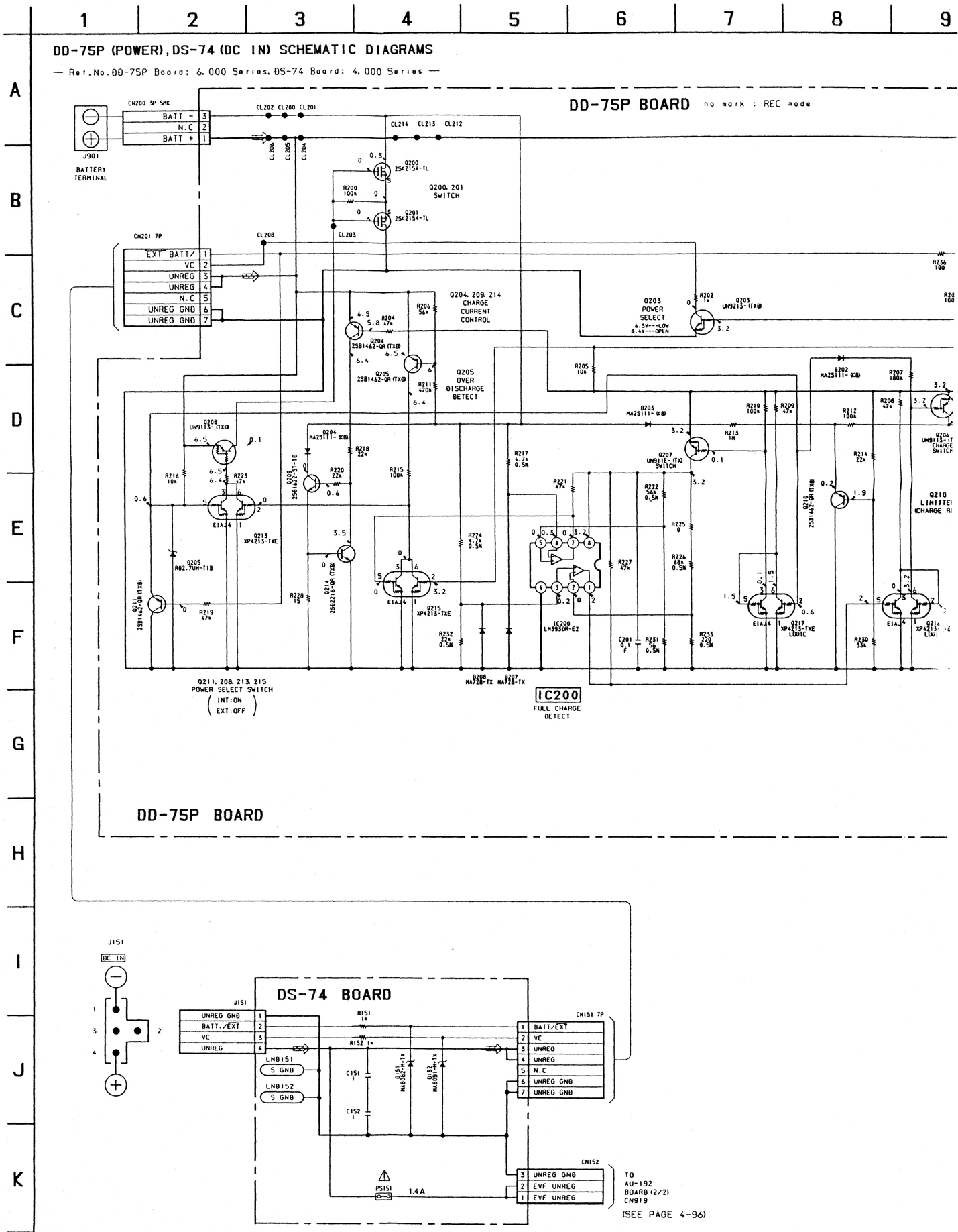

DD-75P BOARD

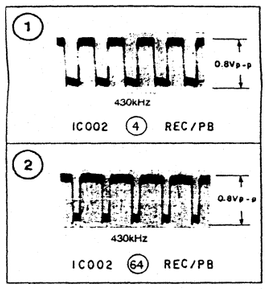

·SIGNAL PATH

	REC	REC/PB	PB
Drum servo (speed and phase)		▶▶▶	
Capstan servo (speed and phase)		▶▶	

Note:
The components identified by mark ⚠ or dotted line with mark ⚠ are critical for safety.
Replace only with part number specified.

16

) no mark : REC mode

PS011 1.4A
PS012 1.4A
PS013 1.4A
PS014 1.4A
PS015 1.4A
PS016 1.4A

C005 22 16V TA:C
C006 22 16V TA:C
C007 22 16V TA:C
C008 22 16V TA:C
C009 47 16V TA:B
C010 22 16V TA:C
C100 22 16V TA:C

CL207 BATT/EXT
CL209 ACV6.5/8.4
CL210 CHARGE
CL215
CL216 CHARGE REF

R236 100
R201 100k
R202 1k
Q203 UN9213-(TX)
B202 MA2S111-(K)
R207 180k
R208 47k
R209 47k
R210 100k
R212 100k
R213 1M
R214 22k
Q204 UN9213-(TX) CHARGE SWITCH
Q210 2SB1462-QR(TX)
Q210 LIMITER (CHARGE REF)
B206 MA2S111-(K)
Q217 XP4213-TXE L001C
Q216 XP4213-TXE L001C
R233 270 0.5W
R250 33k

C015 10p CH
R003 22k
C016 470p CH
C017 470p CH
C018 22p CH
R004 22k
C020 470p CH
C021 470p CH
C023 10p CH
C027 10p CH
C026 1470p CH
R005 5.6k
C024 10p CH
C025 470p CH
R011 22k
C028 10p CH
R009 10 0.5W
R015 15k 0.5W
R014 2.2k 0.5W
R017 18k 0.5W
R019 C034 3.3k 6800p B
R021 3.3k 0.5W
R022 0
R023 3.3k 0.5W
R025 18k 0.5W
R027 C034 10k 560p CH
R028 22k
R035 120k 0.5W
R036 6.8k 0.5W
R050 56k
R034 39k 0.5W
R040 18k 0.5W
R044 22k
R105 47k
R045 5.6k
C045 5500p B
R047 5.6k 0.5W
R048 47k 0.5W
C045 0.01 B
R051 15k 0.5W
R052 47k 0.5W
C047 0.22 F
C052 0.1 F

IC001
IC001 SN104230PM DC/DC CONVERTER

R006 10k
R008 5.6k 0.5W
R007 8.2k
R010 100k
R012 15k 0.5W
R013 22k
R016 4.7k 0.5W
R018 18k 0.5W
C035 6800p B
R020 4.7k
R024 4.7k 0.5W
R026 12k 0.5W
R029 27k 0.5W
R033 0
C042 560p CH
R042 5.6k
C102 0.01 B
R041 22k 0.5W
C044 0.047 B
C046 0.1 B
R049 2.2k
R050 22k 0.5W
C049 6800p B
R053 10k
R054 15k 0.5W
R055 2.2k 0.5W
R056 220 0.5W
R057 18k 0.5W
C050 220p CH
C051 0.1 B

LN0001 SHIELD
LN0002 SHIELD
LN0003 SHIELD
LN0004 SHIELD
LN0005 SHIELD

Q024, Q25 EMERGENCY DETECT
Q024 XP4116-TXE
Q025 XP4116-TXE
Q026 XP4213-TXE L001C
Q027 2SK2037-TE85L SWITCH
Q028 2SK2037-TE85L

<IC001-COMP>
<DRUM-ERR>
<CAP-ERR>
<D+>
<CT>
<STANDBY>
<IC002-COMP>

R058 100k
C061 10p CH
R059 22k
C062 470p CH
C063 470p CH
C064 22p CH
R060 22k
C068 470p CH
R061 8.2k
C071 10p CH
C072 470p CH
R064 22k
C076 10p CH
C069 470p CH
C070 10p CH
R063 22k
C074 10p CH
C073 470p CH
R067 22k
R062 27k 0.5W
C075 470p CH
R065 22k 0.5W
R066 10k 0.5W
R075 22k 0.5W
R071 12k 0.5W
C082 R075 22000p 5.6k B
R074 3.3k 0.5W
R080 33k 0.5W
R082 27k 0.5W
C090 0.01 B
R084 10k
C084 22000p B
R089 5.6k
C037 0.01 B
C088 0.047 B
C091 0.1 B
C095 0.1 B
C097 0.1 F
R091 22k 0.5W
R095 3.3k
C093 6800p B
R098 15k 0.5W
R099 2.2k 0.5W
R100 2.7k 0.5W
R101 18k 0.5W

IC002
IC002 SN104230PM DC/DC CONVERTER DRUM/CAPSTAN PWM DRIVE

R068 2.2k 0.5W
R069 15k 0.5W
R070 0
R072 18k 0.5W
C080 6800p B
R074 3.3k
R079 10k 0.5W
R077 33k 0.5W
R078 0
C085 3300p B
R081 18k 0.5W
R085 33k 0.5W
R086 39k 0.5W
R087 0
R090 5.6k
C087 3300p B
R088 22k 0.5W
R093 5.6k 0.5W
R094 18k 0.5W
R094 47k 0.5W
R097 47k 0.5W
C092 0.22 F

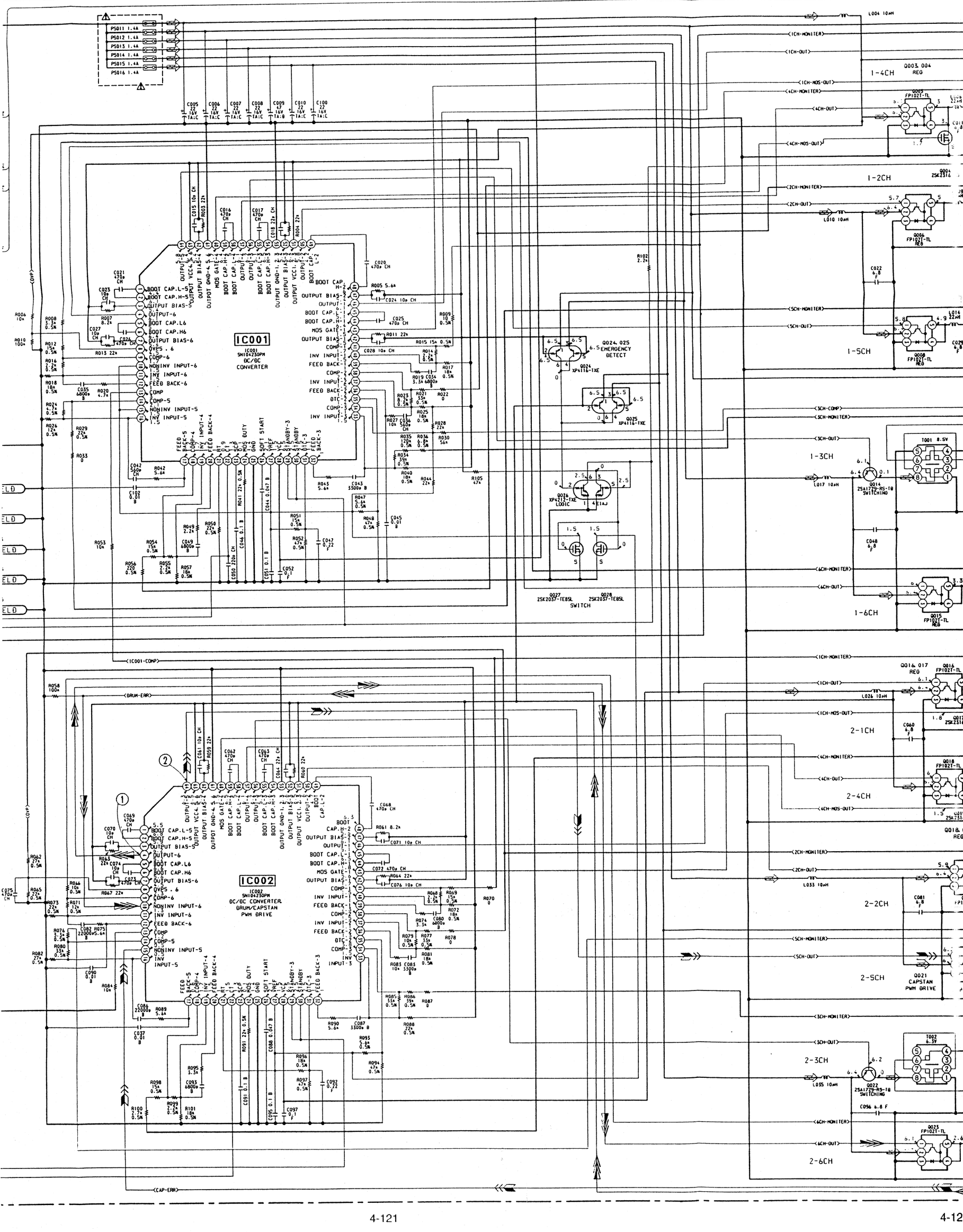
IC001
SN10A230PM
DC/DC CONVERTER
IC002
SN10A230PM
DC/DC CONVERTER
DRUM/CAPSTAN
PWM DRIVE
1-4CH
1-2CH
1-5CH
1-3CH
1-6CH
2-1CH
2-4CH
2-2CH
2-5CH
2-3CH
2-6CH
Q024, 025 EMERGENCY DETECT
Q026 XP4212-TXE
Q027 2SK2037-TE85L SWITCH
Q028 2SK2037-TE85L SWITCH
Q022 2SA1779-RS-TB SWITCHING
Q014 2SA1779-RS-TB SWITCHING
Q003, 004 REG
Q016, 017 REG
Q021 CAPSTAN PWM DRIVE
(1CH-MONITER)
(1CH-OUT)
(1CH-MOS-OUT)
(4CH-MONITER)
(4CH-OUT)
(4CH-MOS-OUT)
(2CH-MONITER)
(2CH-OUT)
(5CH-MONITER)
(5CH-OUT)
(3CH-COMP)
(3CH-MONITER)
(3CH-OUT)
(6CH-MONITER)
(6CH-OUT)
(IC001-COMP)
(DRUM-ERR)
(CAP-ERR)
(OVP)

19 | 20 | 21 | 22 | 23 | 24 | 25 | 26 | 27 | 28 | 29

1-1CH
1-2CH
1-3CH
1-4CH
1-5CH
1-6CH
2-1CH
2-2CH
2-3CH
2-4CH
2-5CH
2-6CH

Q003, 004 REG
Q001, 002 REG
Q005, 007 CAM 00 SWITCH
Q009, 011, 012 SWITCH
Q016, 017 REG
Q018, 019 REG
Q021 CAPSTAN PWM DRIVE
Q023 DRUM PWM DRIVE

CN001 40P ZIF_0.5MM

1	SEIDEN GND
2	N.C
3	EVER 3.3V
4	EVER 3.3V
5	BATT/EXT
6	CHARGE
7	CHARGE REF
8	ACV6.5/8.4
9	VTR UNREG
10	GND
11	GND
12	GND
13	VTR 00 ON
14	CAM 00 ON
15	GND
16	IND1 3.0V
17	IND1 3.0V
18	GND
19	J1 3.0V
20	J1 3.0V
21	GND
22	J2 3.0V
23	J2 3.0V
24	J2 3.0V
25	GND
26	SS 5.0V
27	SS 5.0V
28	GND
29	AUDIO 5.0V
30	AUDIO 5.0V GND
31	AUDIO 3.3V
32	GND
33	AUDIO 3.0V
34	AUDIO 3.0V GND
35	SS 15V
36	GND
37	SS 3.3V
38	GND
39	LED 5.0V
40	GND

TO JC-15P BOARD (6/7) CN502 (SEE PAGE 4-14)

CN002 40P ZIF_0.5MM

1	EVF UNREG GND
2	EVF UNREG
3	GND
4	EVF 5V
5	GND
6	EVF 15V
7	GND
8	VIDEO 5V
9	GND
10	VIDEO 3.3V
11	GND
12	GND
13	VIDEO 3V
14	VIDEO 3V
15	GND
16	GND
17	MAGIC 3.3V
18	MAGIC 3.3V
19	CAM GND
20	CAM 3.3/3.6V
21	CAM 3.3/3.6V
22	CAM GND
23	CAM GND
24	CAM GND
25	CAM 05V
26	CAM 05V
27	CAM 5V
28	CAM 5V
29	CAM 5V
30	CCD GND
31	CCD GND
32	CCD -8.5V
33	CCD 15V
34	CCD 15V
35	VAP GND
36	VAP GND
37	VAP 5V
38	CAM MT 5V
39	CAM MT GND
40	CAM MT GND

TO CB-54P BOARD CN002 (SEE PAGE 4-56, 60, 61)

CN003 30P B_TO_B_0.5MM

1	SS 5.0V
2	SS 3.3V
3	GND
4	GND
5	RP 5.0V
6	RP 3.3V
7	GND
8	GND
9	RP 6.6V
10	RP 3.0V
11	RP 6.6V
12	GND
13	GND
14	MOTOR UNREG
15	GND
16	MOTOR UNREG
17	GND
18	MOTOR UNREG
19	GND
20	GND
21	DRUM VSC
22	CAP ERROR
23	GND
24	GND
25	GND
26	CAP VS
27	DRUM VS
28	CAP VS
29	DRUM VS
30	CAP VS

TO RS-73 BOARD (2/2) CN884 (SEE PAGE 4-73)

SECTION 5
REPAIR PARTS LIST

5-1. EXPLODED VIEWS

NOTE:
- -XX, -X mean standardized parts, so they may have some differences from the original one.
- Items marked "*" are not stocked since they are seldom required for routine service. Some delay should be anticipated when ordering these items.
- The mechanical parts with no reference number in the exploded views are not supplied.

5-1-1. OVERALL-1 SECTION

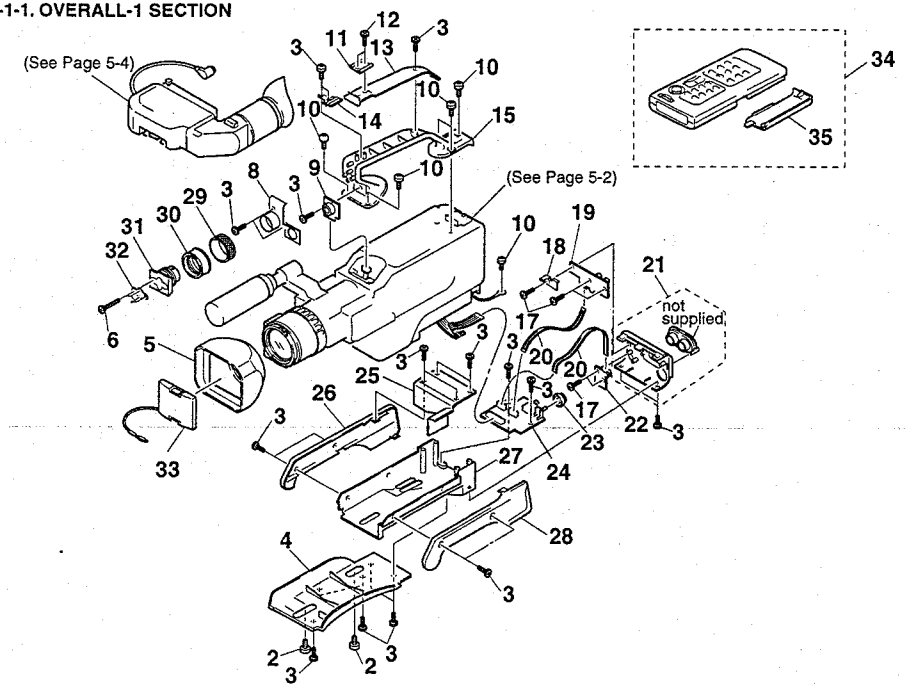

Ref. No.	Part No.	Description	Remarks
2	3-974-014-11	SCREW, PAD FIXED (L=13 mm)	
3	3-713-786-71	SCREW (M2X5)	
4	3-972-977-01	CUSHION, PAD	
5	X-3945-078-1	HOOD ASSY, LENS	
6	7-682-655-09	SCREW +PS 3X30	
8	3-973-011-01	COVER, VF	
9	A-7072-901-A	VF-105 BOARD, COMPLETE	
10	3-974-013-01	SCREW (+B 3X6), BIND	
11	3-724-511-02	SHOE, ACCESSORY	
12	3-948-809-01	SCREW (M2X6)	
13	3-973-010-01	COVER, HANDLE	
14	3-963-951-01	BRACKET, HANDLE STRAP	
15	3-973-003-01	HANDLE	
17	3-719-601-01	SCREW, TAPPING (B2X5)	
18	3-973-064-01	PLATE, SJ GROUND	
19	A-7072-903-A	SJ-15 BOARD, COMPLETE	

Ref. No.	Part No.	Description	Remarks
20	1-777-505-11	CABLE, FLEXIBLE FLAT(FLS-2) 6P	
21	X-3946-661-1	COVER ASSY, PAD TERMINAL	
22	A-7072-905-A	RT-21 BOARD, COMPLETE	
23	3-972-978-01	VOLUME, HEADPHONE	
24	A-7072-904-A	LH-10 BOARD, COMPLETE	
25	3-972-975-01	COVER, PAD (UPPER)	
26	3-972-974-01	COVER, PAD (RIGHT)	
27	3-972-976-01	FRAME, PAD	
28	3-972-961-01	COVER, PAD (LEFT)	
* 29	3-720-919-01	RUBBER, LOCK RING	
* 30	3-679-543-11	RING(D),LOCK	
31	3-686-261-03	SHOE3,SLIDE,VF	
* 32	3-687-070-01	WASHER,SHOE	
33	X-3946-655-1	CAP ASSY	
34	8-917-570-90	REMOTE COMMANDER RMT-807 SET (AEP, UK)	
34	8-917-569-90	REMOTE COMMANDER RMT-806 SET (E)	
35	3-742-854-21	COVER, BATTERY	

5-1-2. OVERALL-2 SECTION

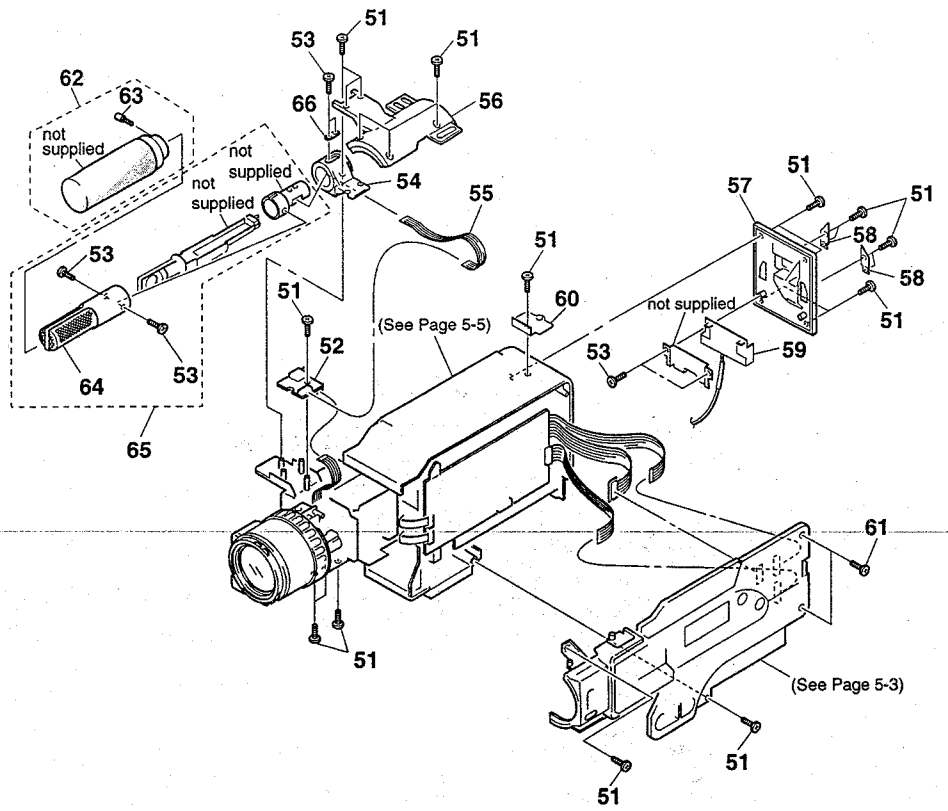

Ref. No.	Part No.	Description	Remarks
51	3-713-786-71	SCREW (M2X5)	
52	A-7072-890-A	EM-10 BOARD, COMPLETE	
53	3-719-601-01	SCREW, TAPPING (B2X5)	
54	3-974-005-01	HOLDER, MICROPHONE	
55	1-777-508-11	CABLE, FLEXIBLE FLAT(FMM-16) 8P	
56	X-3946-654-2	FRONT (UPPER) CABINET ASSY	
57	X-3946-657-1	BATTERY BRACKET ASSY	
58	3-972-981-01	REINFORCEMENT, BT	
59	1-537-833-31	TERMINAL BOARD, BATTERY	
60	3-972-954-01	BRACKET, STRAP	
61	3-974-013-01	SCREW (+B 3X6), BIND	
62	X-2542-136-1	SCREEN ASSY, WINDOW	
* 63	2-539-441-01	SCREW, FASTENING	
64	X-2542-135-1	MIC GRIL ASSY	
65	8-814-287-00	MICROPHONE, C-2037	
66	3-974-004-01	RETAINER, MICROPHONE	

5-1-3. CABINET (R) SECTION

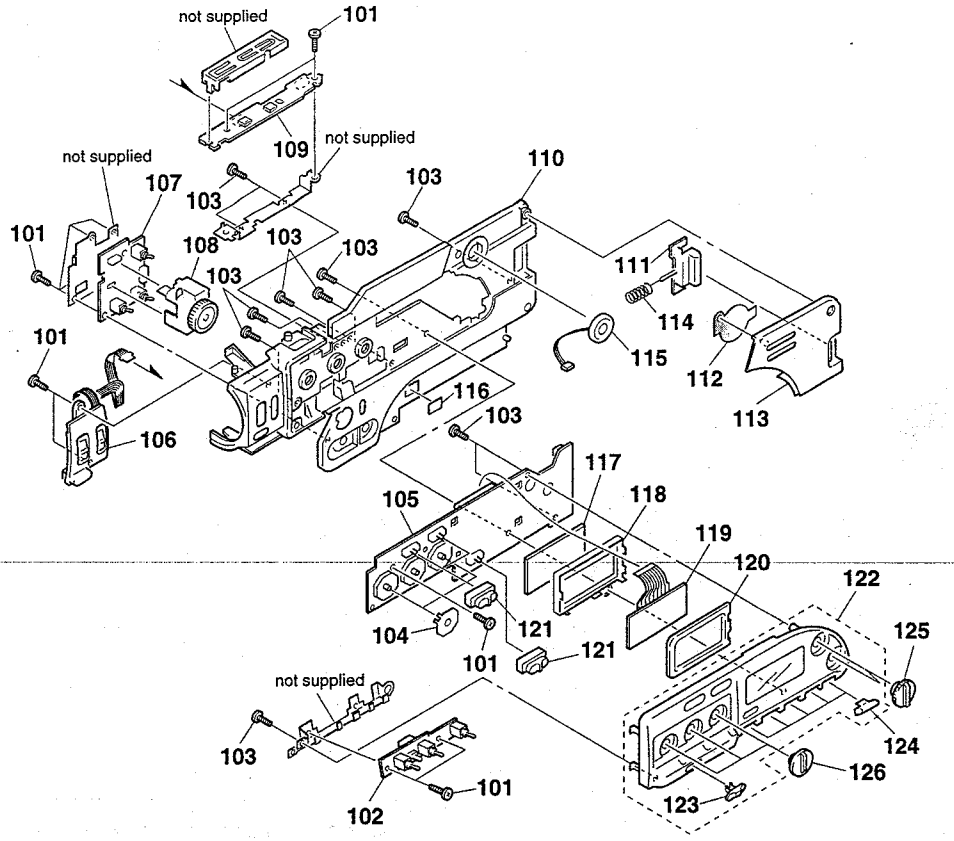

Ref. No.	Part No.	Description	Remarks
101	7-627-853-47	SCREW (M2X4)	
102	A-7072-973-A	AM-38 BOARD, COMPLETE	
103	3-719-408-11	SCREW, TAPPING (B2X5)	
104	3-973-043-01	BASE, KNOB	
105	A-7072-971-A	FK-68 BOARD, COMPLETE	
106	1-473-866-11	SWITCH BLOCK, CONTROL (FI4520)	
107	A-7072-978-A	SW-286 BOARD, COMPLETE	
108	1-762-821-11	SWITCH, ROTARY (ENCODER)	
109	A-7072-972-A	ED-44 BOARD, COMPLETE	
110	3-973-038-01	CABINET (R)	
111	3-973-036-01	KNOB, BAT RELEASE	
112	3-973-041-01	SHEET, SP	
113	3-973-035-01	PAD, R	
114	3-426-508-01	SPRING, COMPRESSION	
115	1-504-753-11	SPEAKER (2.8CM)	
116	3-956-279-01	LID, CPC	
117	3-973-047-01	ILLUMINATOR	
118	3-973-048-01	HOLDER, LCD	
119	1-801-515-11	DISPLAY PANEL, LIQUID CRYSTAL	
120	3-973-044-01	CUSHION, SP	
121	3-972-959-01	KNOB, PANEL	
122	X-3946-660-1	PANEL ASSY, CONTROL	
123	3-972-958-01	KNOB, AUTO LOCK	
124	3-972-960-01	KNOB, EDGE	
125	3-973-046-01	KNOB, VOL	
126	3-973-042-01	KNOB, ROTARY	

5-1-4. EVF SECTION

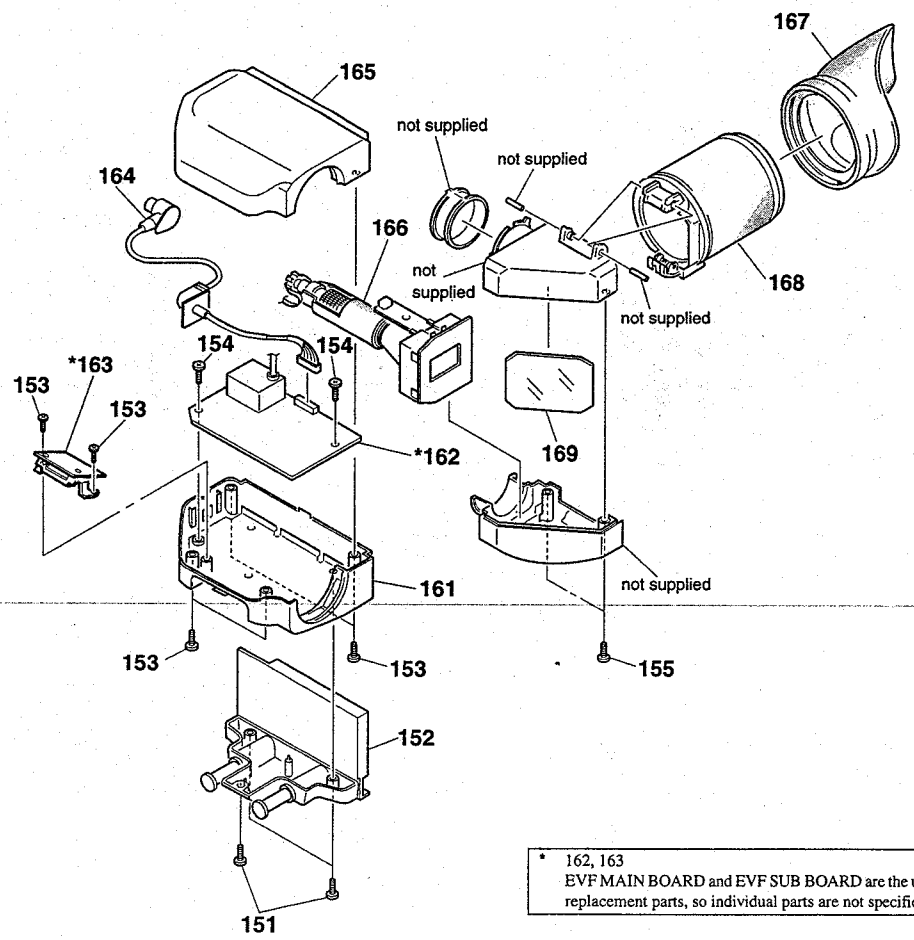

* 162, 163
EVF MAIN BOARD and EVF SUB BOARD are the unit replacement parts, so individual parts are not specified.

Ref. No.	Part No.	Description	Remarks
151	3-974-013-01	SCREW +B 3X6	
152	A-7093-031-A	EVF SLIDE PLATE ASSY	
153	7-685-134-19	SCREW 2.6X8	
154	7-685-531-19	SCREW 2.6X4	
155	7-685-105-19	SCREW +P 2X8	
161	3-709-167-01	CABINET (B)	
⚠162	1-589-946-21	EVF MAIN BOARD	
163	1-589-945-11	EVF SUB BOARD	
⚠164	3-709-174-01	CABLE	
165	3-709-166-01	CABINET (T)	
⚠166	3-709-173-01	CRT BLOCK	
167	3-709-164-01	EYE CAP	
168	3-709-168-01	EYE CUP	
169	3-709-170-01	MIRROR	

Note : The components identified by mark ⚠ or dotted line with mark ⚠ are critical for safety.
Replace only with part number specified.

5-1-5. MAIN BOARD SECTION

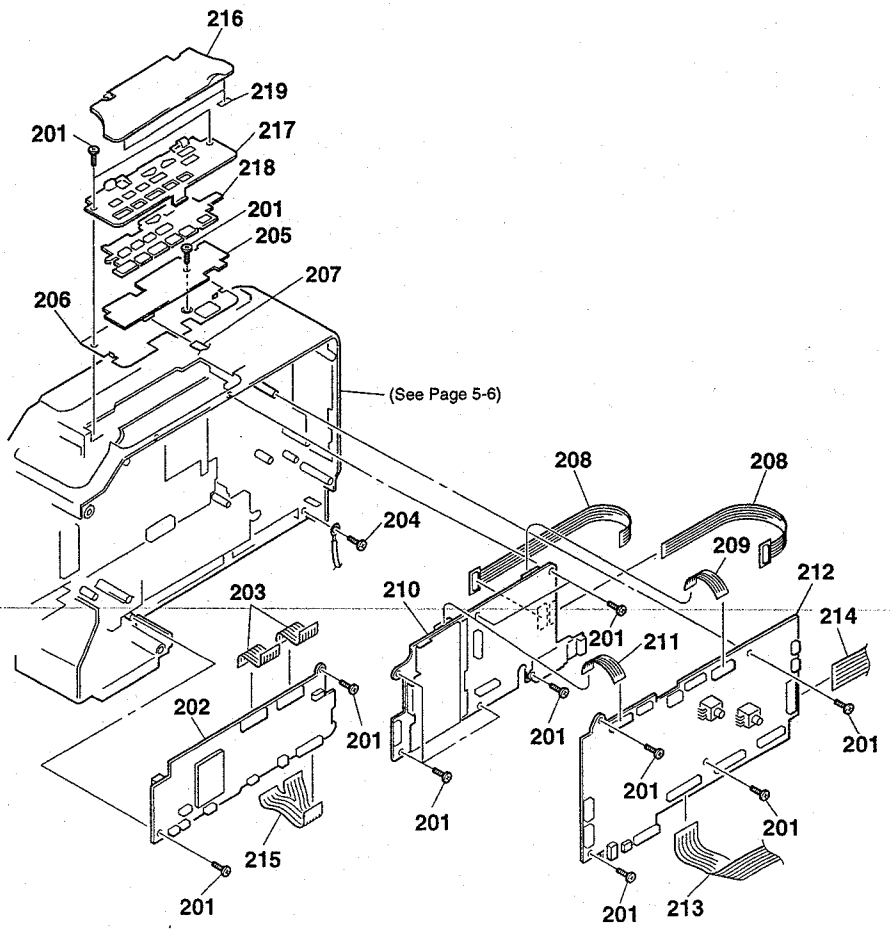

Ref. No.	Part No.	Description	Remarks
201	3-713-786-71	SCREW (M2X5)	
202	A-7066-870-A	RS-73 BOARD, COMPLETE	
203	1-777-495-11	CABLE, FLEXIBLE FLAT(FRA-1) 34P	
204	3-974-013-01	SCREW (+B 3X6), BIND	
205	A-7072-900-A	VK-41P BOARD, COMPLETE (AEP, UK)	
205	A-7072-999-A	VK-41P BOARD, COMPLETE (E)	
206	X-3946-662-1	SHEET METAL ASSY, VK	
207	1-777-502-11	CABLE, FLEXIBLE FLAT(FAV-1) 6P	
208	1-663-133-11	FP-460 FLEXIBLE BOARD	
209	1-777-496-11	CABLE, FLEXIBLE FLAT(FJA-1) 15P	
210	A-7066-868-A	JC-15P BOARD, COMPLETE	
211	1-777-497-11	CABLE, FLEXIBLE FLAT(FJA-2) 28P	
212	A-7066-871-A	AU-192 BOARD, COMPLETE	
213	1-777-500-11	CABLE, FLEXIBLE FLAT(FAL-1) 20P	
214	1-777-504-11	CABLE, FLEXIBLE FLAT(FAF-2) 40P	
215	1-663-134-11	FP-461 FLEXIBLE BOARD	
216	3-973-022-01	LID, VK	
217	3-973-021-01	FRAME, VK (AEP, UK)	
217	3-973-021-11	FRAME, VK (E)	
218	3-973-023-01	BUTTON, VK	
219	3-973-024-01	CUSHION, VK	

5-1-6. POWER BOARD SECTION

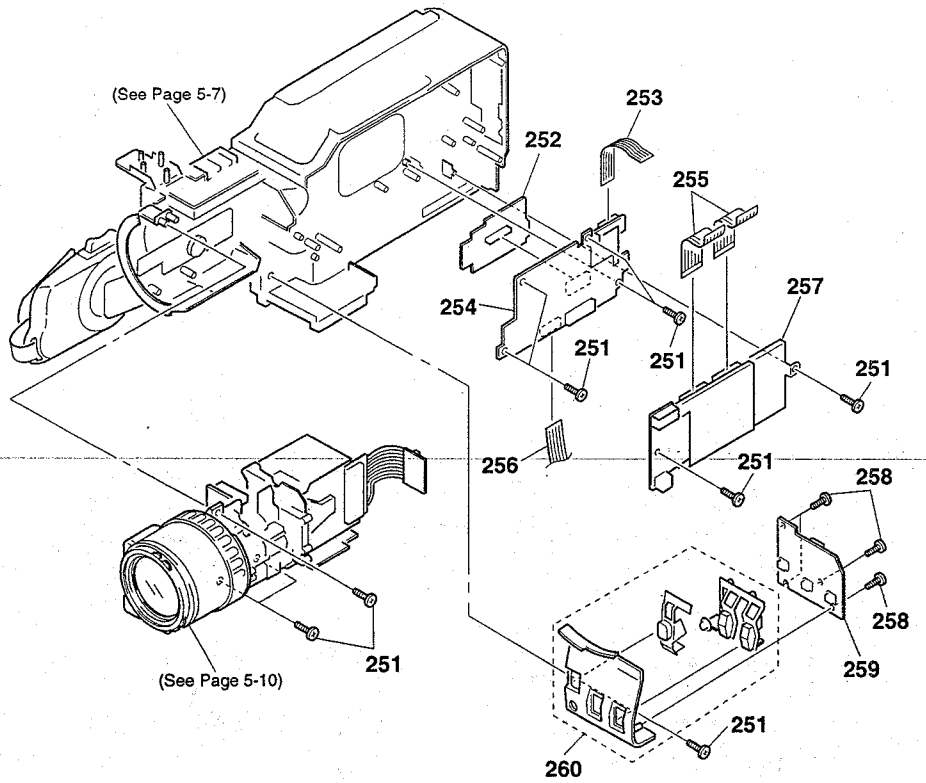

Ref. No.	Part No.	Description	Remarks
251	3-713-786-71	SCREW (M2X5)	
252	A-7072-219-A	MG-16 BOARD, COMPLETE	
253	1-777-498-11	CABLE, FLEXIBLE FLAT(FCA-4) 24P	
254	A-7066-869-A	CB-54P BOARD, COMPLETE	
255	1-656-386-11	FP-199 FLEXIBLE BOARD	
256	1-777-510-11	CABLE, FLEXIBLE FLAT(FCL-2) 30P	
257	A-7066-612-A	DD-75P BOARD, COMPLETE	
258	3-719-601-01	SCREW, TAPPING (B2X5)	
259	A-7072-902-A	FS-78 BOARD, COMPLETE	
260	X-3946-658-1	FRONT (LOWER) CABINET ASSY	

5-1-7. GRIP SECTION

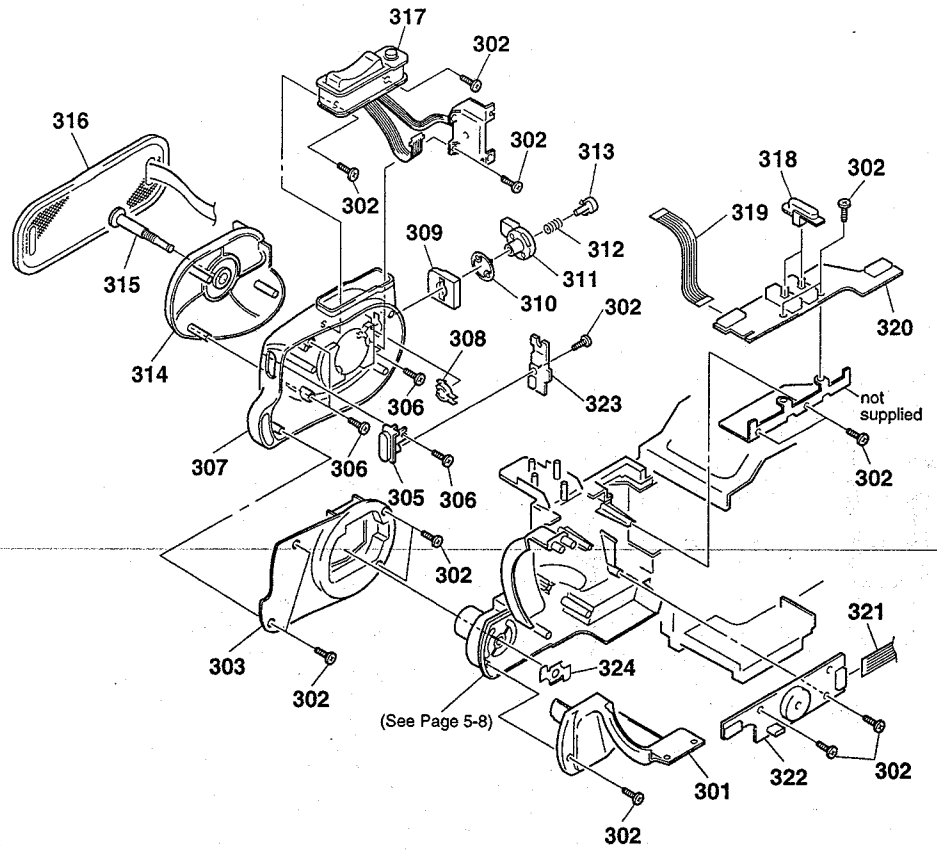

Ref. No.	Part No.	Description	Remarks
301	3-972-980-01	CABINET, GP ARM	
302	3-713-786-71	SCREW (M2X5)	
303	3-972-985-01	CABINET, GRIP (REAR)	
305	3-972-987-01	WINDOW, REMOTE CONTROL	
306	3-719-601-01	SCREW, TAPPING (B2X5)	
307	3-972-988-01	GRIP (MAIN)	
308	3-963-956-01	HOLDER, STAND-BY	
309	3-963-961-01	BASE, STAND-BY KNOB	
310	3-736-364-01	SPRING	
311	3-963-966-01	KNOB, STAND-BY	
312	3-578-221-00	SPRING, COMPRESSION	
313	3-963-954-01	BUTTON, S/S	
314	3-972-984-01	PAD, GRIP	
315	3-972-968-01	SCREW, FIXED	
316	3-972-986-01	BELT, GRIP	
317	1-473-867-11	SWITCH BLOCK, CONTROL (ZK4520)	
318	3-972-966-01	KNOB, MICROPHONE	
319	1-777-507-11	CABLE, FLEXIBLE FLAT(FME-1) 12P	
320	A-7072-889-A	MA-280 BOARD, COMPLETE	
321	1-777-501-11	CABLE, FLEXIBLE FLAT(FAG-1) 13P	
322	A-7072-891-A	GP-14 BOARD, COMPLETE	
323	A-7072-976-A	HR-11 BOARD, COMPLETE	
324	3-974-009-01	GP STOPPER	

5-1-8. CABINET (L) SECTION

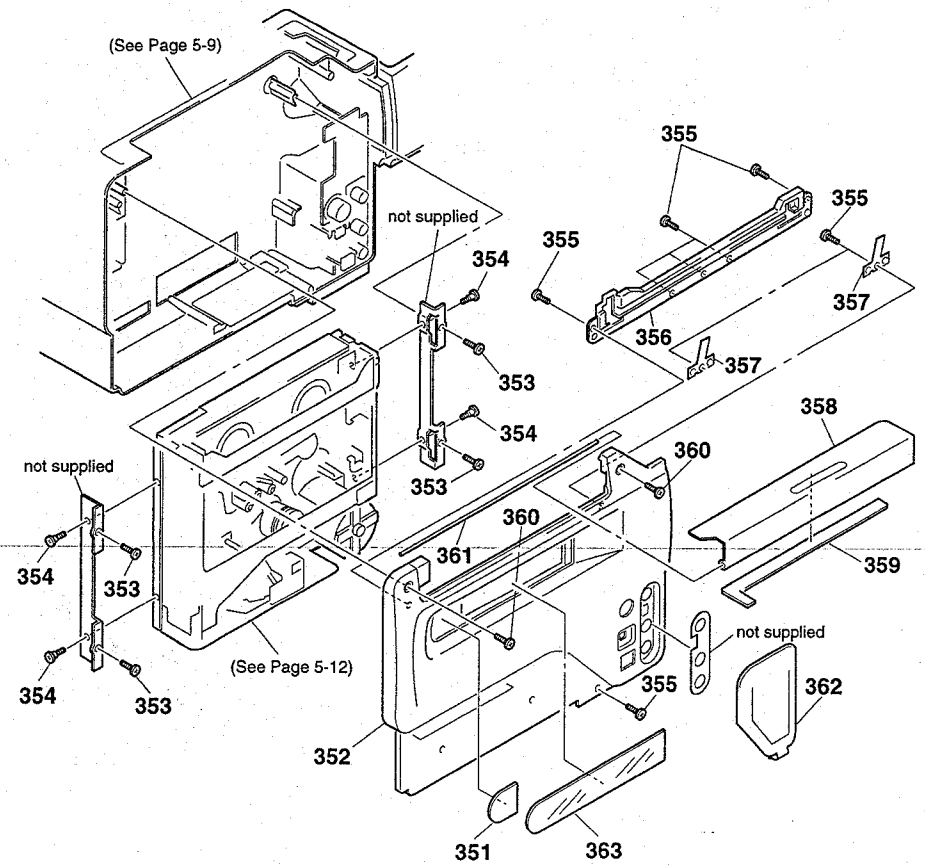

Ref. No.	Part No.	Description	Remarks
351	3-973-034-01	SHEET,CASSETTE WINDOW ADHESIVE	
352	3-973-025-01	CABINET (L)	
353	3-974-010-01	SCREW (M3X4), STEP	
354	3-946-680-01	SCREW (M2X2.2), SPECIAL HEAD	
355	3-964-010-01	SCREW (M2X4)	
356	3-973-029-01	FRAME, CASSETTE LID	
357	3-973-030-01	SPRING, CS LEAF	
358	3-973-028-01	LID, CASSETTE	
359	3-973-032-01	CUSHION, CS	
360	3-974-013-01	SCREW (+B 3X6), BIND	
361	3-973-031-01	SHAFT, CS	
362	3-972-951-01	COVER (L), JACK	
363	3-973-033-01	WINDOW, CASSETTE	

5-1-9. MAIN FRAME SECTION

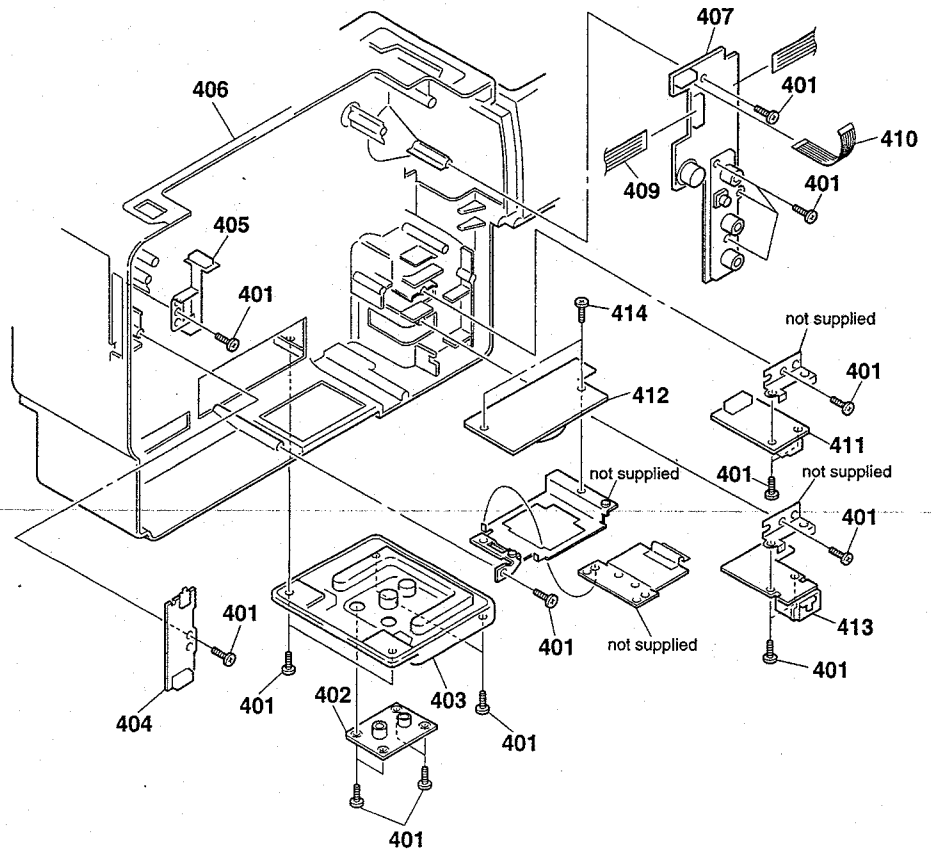

Ref. No.	Part No.	Description	Remarks
401	3-713-786-71	SCREW (M2X5)	
402	3-974-594-01	TABLE, TRIPOD	
403	X-3946-859-1	BASE ASSY, TRIPOD	
404	A-7072-974-A	EJ-27 BOARD, COMPLETE	
405	3-972-964-01	BUTTON, EJ	
406	3-972-962-01	FRAME, MAIN	
407	A-7072-975-A	JK-149 BOARD, COMPLETE	
409	1-777-499-11	CABLE, FLEXIBLE FLAT(FJJ-1) 15P	
410	1-777-509-11	CABLE, FLEXIBLE FLAT(FMJ-2) 10P	
411	A-7072-894-A	DV-27 BOARD, COMPLETE	
412	A-7072-892-A	LI-60 BOARD, COMPLETE	
413	A-7072-893-A	DS-74 BOARD, COMPLETE	
414	7-628-853-47	SCREW (M2X4)	

5-1-10. CCD BOARD SECTION

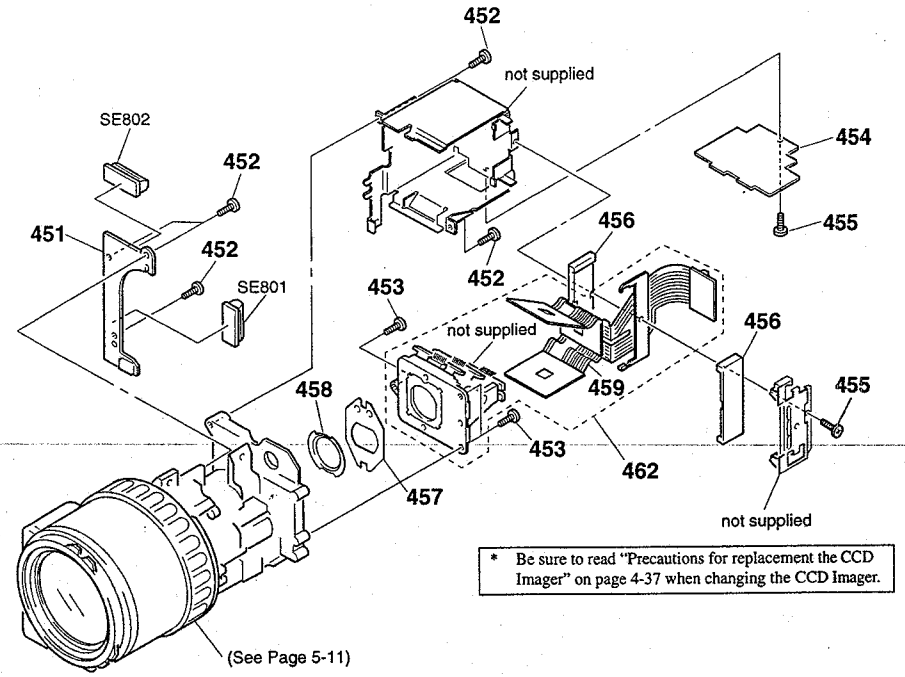

* Be sure to read "Precautions for replacement the CCD Imager" on page 4-37 when changing the CCD Imager.

Ref. No.	Part No.	Description	Remarks
451	A-7072-977-A	SE-56 BOARD, COMPLETE	
452	3-719-601-01	SCREW, TAPPING (B2X5)	
453	3-947-268-11	2X7.5, +B TAPPING (P)	
454	A-7072-885-A	LD-86 BOARD, COMPLETE	
455	3-713-786-71	SCREW (M2X5)	
456	1-500-397-11	CORE, FERRITE	
457	3-963-809-01	PLATE, LIGHT INTERCEPTION	
458	3-963-810-01	RUBBER (M), SEAL	
459	A-7072-884-A	CD-160 BOARD, COMPLETE	
462	A-7030-697-A	CCD, PRISM ASSY (SERVICE) (CCD IMAGER included)	
SE801	1-810-725-71	SENSOR, ANGULAR VELOCITY (YAW)	
SE802	1-810-725-81	SENSOR, ANGULAR VELOCITY (PITCH)	

5-1-11. ZOOM LENS SECTION

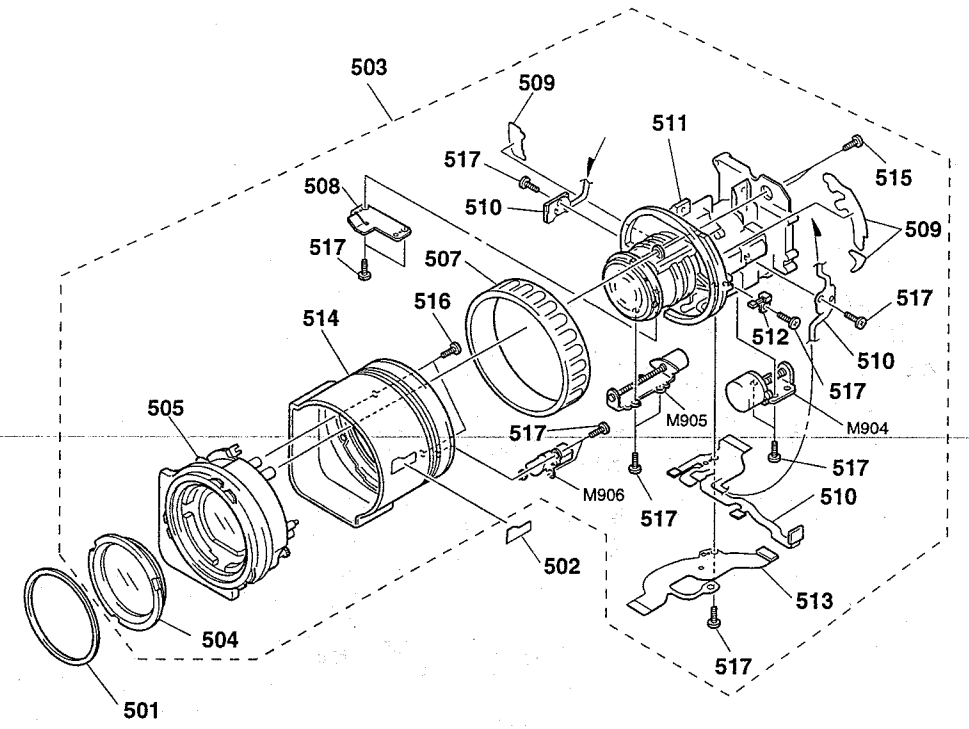

Ref. No.	Part No.	Description	Remarks
501	3-964-032-01	LABEL, LENS	
502	3-963-933-01	EMBLEM, CCD	
503	1-547-795-21	ZOOM LENS (VCL-5910WA)	
504	3-709-011-01	RING ASSY, PROTECTION GLASS	
505	3-709-010-01	VAP ASSY	
507	3-709-152-01	RUBBER, MF	
508	3-709-021-01	SHEET METAL, FITTING	
509	3-709-043-01	SHEET, REFUSE PREVENTION	
510	3-709-153-01	FLEXIBLE, MAIN	
511	3-709-016-01	LENS ASSY, ZOOM	
512	3-709-019-01	SW, LEAF	
513	3-709-015-01	FLEXIBLE, VAP	
514	3-709-146-01	TUBE, MIRROR (2), VAP	
515	3-708-795-01	SCREW +P 2.0X7.0	
516	3-708-450-01	SCREW +P 1.7X5.5	
517	3-707-946-01	SCREW +P 1.7X4.5	
M904	3-709-155-01	MOTOR, FOCUS	
M905	3-709-154-01	MOTOR, ZOOM	
M906	3-709-014-01	MOTOR UNIT, VAP LOCK	

5-1-12. CASSETTE COMPARTMENT BLOCK SECTION

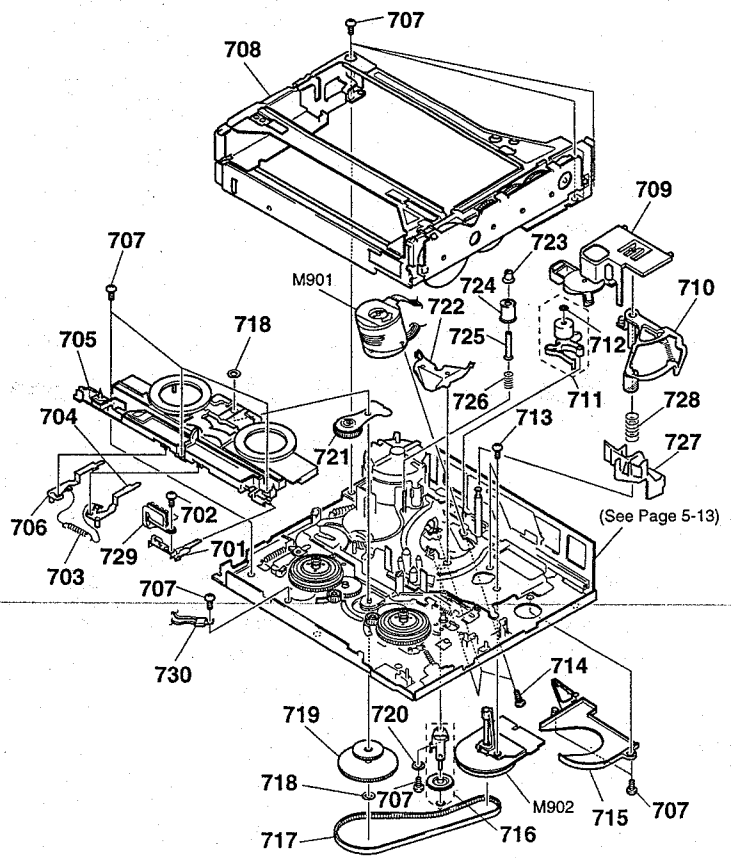

Ref. No.	Part No.	Description	Remarks
701	3-973-163-01	HOLDER, MIC	
702	3-703-816-42	SCREW (M1.4X2.5), SPECIAL HEAD	
703	3-973-174-01	SPRING, TENSION	
704	X-3946-696-1	ARM (T) ASSY, NEUTRALITY	
705	3-973-201-01	BASE, RH	
706	X-3946-695-1	ARM (S) ASSY, NEUTRALITY	
707	3-732-817-01	SCREW (2X4.5), TAPPING	
708	A-7025-004-A	COMPARTMENT BLOCK ASSY	
709	3-973-265-01	CAP, DRUM	
710	X-3946-694-1	ARM ASSY, PINCH	
711	A-7025-003-A	HC BLOCK ASSY	
712	3-349-859-41	WASHER	
713	3-973-266-01	SCREW (M2X2.2 (MEK)), HEAD	
714	A-7026-009-B	SCREW ASSY, DRUM FITTING	
715	3-973-108-01	COVER, CAPSTAN	
716	A-7025-005-A	ARM BLOCK ASSY, TENSION	
717	3-973-177-01	BELT, TIMING	
718	3-726-829-01	WASHER, STOPPER	
719	3-973-164-01	GEAR, RELAY	
720	3-973-128-01	WASHER, TA	
721	X-3946-697-1	ARM ASSY, PENDULUM	
722	3-973-171-01	SUPPORT, TAPE	
723	3-726-884-01	FLANGE, UPPER, TG2	
724	3-973-154-01	ROLLER, TG2	
725	3-973-175-01	SLEEVE, TG2	
726	3-726-886-01	SPRING, COMPRESSION	
727	3-973-817-01	RETAINER, TAPE	
728	3-973-818-01	SPRING, COMPRESSION	
729	1-662-945-11	FP-495 FLEXIBLE BOARD	
730	1-801-525-11	SENSOR, DEW CONDENSATION	
M901	A-7044-013-A	DRUM ASSY (DEH-09A-R)	
M902	8-835-575-01	MOTOR, DC SCD13A/J-N	

5-1-13. MECHANISM CHASSIS BLOCK (1) SECTION

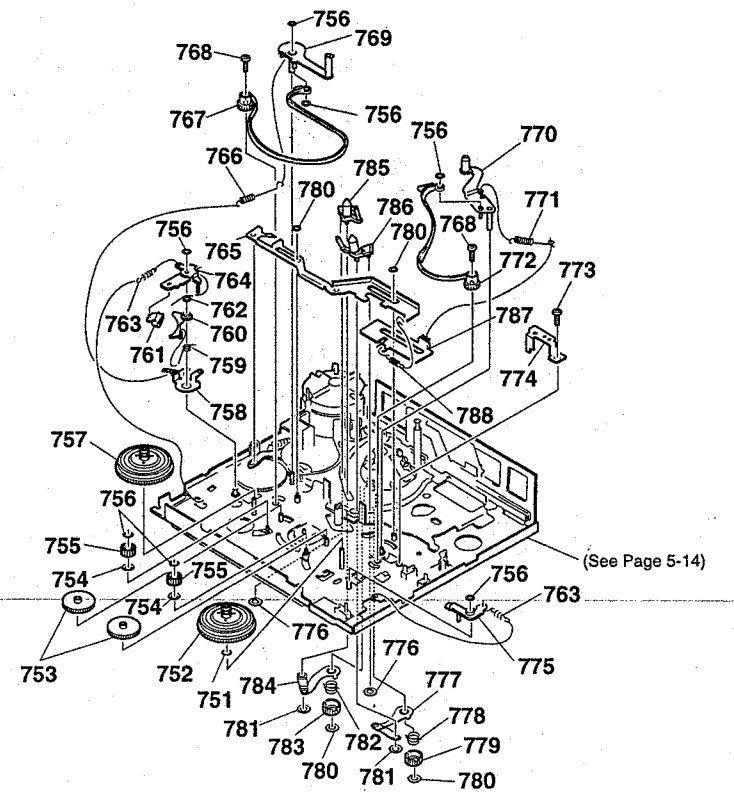

Ref. No.	Part No.	Description	Remarks
751	3-738-212-21	RETAINER, THRUST, REEL TABLE	
752	X-3946-686-1	TABLE (T) ASSY, REEL	
753	X-3946-699-1	GEAR ASSY, DIRECT	
754	3-738-212-01	RETAINER, THRUST, REEL TABLE	
755	3-973-184-01	GEAR, LIMITTER	
756	3-726-829-01	WASHER, STOPPER	
757	X-3946-685-1	TABLE (S) ASSY, REEL	
758	3-973-145-01	HOOK, TG1 SPRING	
759	3-973-127-01	SPRING (S HARD), TORSION	
760	3-973-151-01	HARD, S	
761	3-973-152-01	CAM, S RELEASE	
762	3-973-172-01	SPRING (S BRAKE), TORSION	
763	3-973-174-01	SPRING, TENSION	
764	3-973-153-01	ARM (S), BRAKE	
765	3-973-139-01	SLIDER, SUB	
766	3-973-144-01	SPRING (TG1), TENSION COIL	
767	X-3946-698-1	BAND ASSY, TG1	
768	3-973-266-01	SCREW (M2X2.2 (MEK)), HEAD	
769	X-3946-688-1	ARM ASSY, TG1	
770	X-3946-687-1	TG7 ASSY	
771	3-973-160-01	SPRING (TG7), TENSION COIL	
772	X-3946-700-1	TG7 BAND ASSY	
773	3-732-817-01	SCREW (2X4.5), TAPPING	
774	X-3946-703-1	HOLDER ASSY, TG7	
775	3-973-173-01	ARM (T), BRAKE	
776	3-973-143-01	WASHER, COASTER STOPPER	
777	X-3946-689-1	ARM (T) ASSY, GL	
778	3-973-156-01	SPRING (T), GL TORSION	
779	3-973-138-01	GEAR (T), GL	
780	3-669-465-01	WASHER (1.5), STOPPER	
781	3-973-142-01	STOPPER, COASTER PUNCHING	
782	3-973-146-01	SPRING (S), GL TORSION	
783	3-973-264-01	GEAR (S), GL	
784	X-3946-690-1	ARM (S) ASSY, GL	
785	A-7025-006-A	COASTER (S) BLOCK ASSY	
786	A-7025-007-A	COASTER (T) BLOCK ASSY	
787	3-973-150-01	STOPPER, FWD	
788	3-973-161-01	SPRING (FWD STOPPER), COIL	

5-1-14. MECHANISM CHASSIS BLOCK (2) SECTION

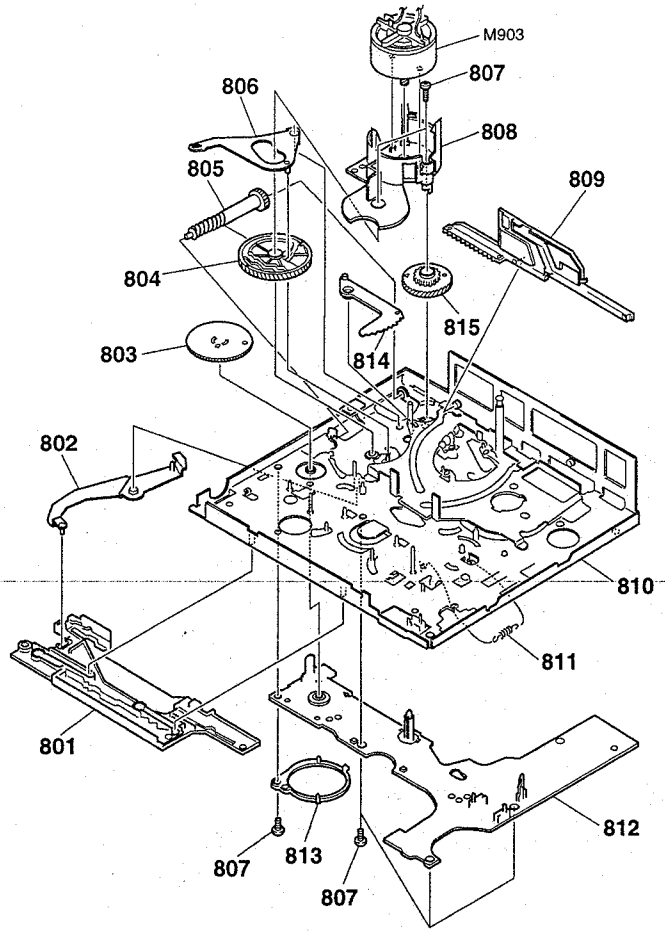

Ref. No.	Part No.	Description	Remarks
801	3-973-200-01	SLIDER, MODE	
802	X-3946-701-1	ARM ASSY, SLIDER	
803	3-973-162-01	GEAR, ENCODER	
804	3-973-182-01	GEAR, MAIN CAM	
805	3-973-159-01	GEAR, JOINT	
806	3-973-157-01	LEVER, SUB SLIDER DRIVING	
807	3-732-817-01	SCREW (2X4.5), TAPPING	
808	X-3946-847-1	HOLDER ASSY, MOTOR	
809	3-973-181-01	SLIDER, PINCH	

Ref. No.	Part No.	Description	Remarks
810	X-3946-706-1	CHASSIS ASSY, MECHANICAL	
811	3-973-141-01	SPRING, TENSION COIL	
812	A-7066-872-A	MD-70 BOARD, COMPLETE	
813	3-973-176-01	COVER, ENCODER	
814	3-973-158-02	LEVER, LOADING DRIVING	
815	3-973-140-01	GEAR, SUB CAM	
M903	X-3946-702-1	MOTOR ASSY, CAM	

5-2. ELECTRICAL PARTS LIST

NOTE:

When indicating parts by reference number, please include the board naame.

The components identified by mark ⚠ or dotted line with mark ⚠ are critical for safety. Replace only with part number specified.

- Due to standardization, replacements in the parts list may be different from the parts specified in the diagrams or the components used on the set.
- -XX, -X mean standardized parts, so they may have some difference from the original one.
- Items marked "*" are not stocked since they are seldom required for routine service. Some delay should be anticipated when ordering these items.
- CAPACITORS:
  uF: µF
- RESISTORS
  All resistors are in ohms.
  METAL: metal-film resistor
  METAL OXIDE: Metal Oxide-film resistor
  F: nonflammable
- COILS
  uH: µH
- SEMICONDUCTORS
  In each case, u: µ, for example:
  uA...: µA... , uPA... , µPA... ,
  uPB... , µPB... , uPC... , µPC... ,
  uPD..., µPD...

Ref. No.	Part No.	Description				Remarks
	A-7072-973-A	AM-38 BOARD, COMPLETE				
		**********				
		(Ref.No.4,000 Series)				
		< CONNECTOR >				
CN001	1-573-768-21	PIN, CONNECTOR (1.5MM) (SMD) 5P				
		< DIODE >				
D001	8-719-420-14	DIODE MA8082-M				
D002	8-719-420-14	DIODE MA8082-M				
D003	8-719-420-14	DIODE MA8082-M				
		< RESISTOR >				
R001	1-216-838-11	METAL CHIP	27K	5%	1/16W	
R002	1-216-832-11	METAL CHIP	8.2K	5%	1/16W	
R003	1-216-833-11	METAL CHIP	10K	5%	1/16W	
R004	1-216-833-11	METAL CHIP	10K	5%	1/16W	
R005	1-216-833-11	METAL CHIP	10K	5%	1/16W	
		< SWITCH >				
S001	1-570-984-11	SWITCH, TOGGLE (AUTO/MANUAL)				
S002	1-570-984-11	SWITCH, TOGGLE (AUTO/MANUAL)				
S003	1-570-984-11	SWITCH, TOGGLE (AUTO/MANUAL)				
S004	1-570-864-11	SWITCH, SLIDE (AUTO LOCK)				
	A-7066-871-A	AU-192 BOARD, COMPLETE				
		**********				
		(Ref.No.2,000 Series)				
		< CAPACITOR >				
C002	1-104-851-11	TANTAL. CHIP	10uF	20%	10V	
C003	1-104-851-11	TANTAL. CHIP	10uF	20%	10V	
C012	1-110-569-11	TANTAL. CHIP	47uF	20%	6.3V	
C013	1-104-851-11	TANTAL. CHIP	10uF	20%	10V	
C014	1-104-852-11	TANTAL. CHIP	22uF	20%	6.3V	
C015	1-135-259-11	TANTAL. CHIP	10uF	20%	6.3V	
C016	1-164-156-11	CERAMIC CHIP	0.1uF		25V	
C017	1-162-970-11	CERAMIC CHIP	0.01uF	10%	25V	
C018	1-110-569-11	TANTAL. CHIP	47uF	20%	6.3V	
C019	1-135-259-11	TANTAL. CHIP	10uF	20%	6.3V	

Ref. No.	Part No.	Description			Remarks
C020	1-164-156-11	CERAMIC CHIP	0.1uF		25V
C021	1-104-851-11	TANTAL. CHIP	10uF	20%	10V
C023	1-104-852-11	TANTAL. CHIP	22uF	20%	6.3V
C024	1-162-970-11	CERAMIC CHIP	0.01uF	10%	25V
C025	1-110-569-11	TANTAL. CHIP	47uF	20%	6.3V
C026	1-135-259-11	TANTAL. CHIP	10uF	20%	6.3V
C027	1-164-156-11	CERAMIC CHIP	0.1uF		25V
C028	1-135-259-11	TANTAL. CHIP	10uF	20%	6.3V
C031	1-135-259-11	TANTAL. CHIP	10uF	20%	6.3V
C032	1-164-156-11	CERAMIC CHIP	0.1uF		25V
C033	1-135-259-11	TANTAL. CHIP	10uF	20%	6.3V
C034	1-164-156-11	CERAMIC CHIP	0.1uF		25V
C035	1-164-156-11	CERAMIC CHIP	0.1uF		25V
C036	1-164-156-11	CERAMIC CHIP	0.1uF		25V
C037	1-135-259-11	TANTAL. CHIP	10uF	20%	6.3V
C041	1-164-156-11	CERAMIC CHIP	0.1uF		25V
C042	1-135-259-11	TANTAL. CHIP	10uF	20%	6.3V
C043	1-104-851-11	TANTAL. CHIP	10uF	20%	10V
C044	1-164-156-11	CERAMIC CHIP	0.1uF		25V
C045	1-164-156-11	CERAMIC CHIP	0.1uF		25V
C046	1-135-259-11	TANTAL. CHIP	10uF	20%	6.3V
C047	1-164-156-11	CERAMIC CHIP	0.1uF		25V
C048	1-164-156-11	CERAMIC CHIP	0.1uF		25V
C051	1-135-072-21	TANTALUM CHIP	0.22uF	10%	35V
C052	1-104-752-11	TANTAL. CHIP	33uF	20%	6.3V
C053	1-104-851-11	TANTAL. CHIP	10uF	20%	10V
C061	1-164-004-11	CERAMIC CHIP	0.1uF	10%	25V
C062	1-135-181-21	TANTALUM CHIP	4.7uF	20%	6.3V
C063	1-162-965-11	CERAMIC CHIP	0.0015uF	10%	50V
C064	1-107-826-11	CERAMIC CHIP	0.1uF	10%	16V
C065	1-107-826-11	CERAMIC CHIP	0.1uF	10%	16V
C066	1-162-965-11	CERAMIC CHIP	0.0015uF	10%	50V
C067	1-104-851-11	TANTAL. CHIP	10uF	20%	10V
C068	1-104-851-11	TANTAL. CHIP	10uF	20%	10V
C069	1-164-156-11	CERAMIC CHIP	0.1uF		25V
C071	1-164-004-11	CERAMIC CHIP	0.1uF	10%	25V
C072	1-164-156-11	CERAMIC CHIP	0.1uF		25V
C074	1-164-156-11	CERAMIC CHIP	0.1uF		25V
C080	1-104-851-11	TANTAL. CHIP	10uF	20%	10V
C081	1-164-156-11	CERAMIC CHIP	0.1uF		25V

Ref. No.	Part No.	Description			Remarks
C091	1-165-176-11	CERAMIC CHIP	0.047uF	10%	16V
C100	1-135-181-21	TANTALUM CHIP	4.7uF	20%	6.3V
C101	1-135-070-00	TANTALUM CHIP	0.1uF	10%	35V
C102	1-135-181-21	TANTALUM CHIP	4.7uF	20%	6.3V
C103	1-135-259-11	TANTAL. CHIP	10uF	20%	6.3V
C104	1-135-070-00	TANTALUM CHIP	0.1uF	10%	35V
C105	1-135-181-21	TANTALUM CHIP	4.7uF	20%	6.3V
C106	1-135-259-11	TANTAL. CHIP	10uF	20%	6.3V
C107	1-135-181-21	TANTALUM CHIP	4.7uF	20%	6.3V
C108	1-135-181-21	TANTALUM CHIP	4.7uF	20%	6.3V
C109	1-135-181-21	TANTALUM CHIP	4.7uF	20%	6.3V
C110	1-162-966-11	CERAMIC CHIP	0.0022uF	10%	50V
C111	1-162-928-11	CERAMIC CHIP	120PF	5%	50V
C112	1-164-217-11	CERAMIC CHIP	150PF	5%	50V
C113	1-164-217-11	CERAMIC CHIP	150PF	5%	50V
C114	1-162-926-11	CERAMIC CHIP	82PF	5%	50V
C115	1-162-926-11	CERAMIC CHIP	82PF	5%	50V
C116	1-135-259-11	TANTAL. CHIP	10uF	20%	6.3V
C117	1-164-156-11	CERAMIC CHIP	0.1uF		25V
C118	1-135-181-21	TANTALUM CHIP	4.7uF	20%	6.3V
C119	1-135-181-21	TANTALUM CHIP	4.7uF	20%	6.3V
C120	1-135-181-21	TANTALUM CHIP	4.7uF	20%	6.3V
C121	1-135-181-21	TANTALUM CHIP	4.7uF	20%	6.3V
C122	1-135-259-11	TANTAL. CHIP	10uF	20%	6.3V
C123	1-164-156-11	CERAMIC CHIP	0.1uF		25V
C124	1-162-925-11	CERAMIC CHIP	68PF	5%	50V
C125	1-135-259-11	TANTAL. CHIP	10uF	20%	6.3V
C126	1-135-181-21	TANTALUM CHIP	4.7uF	20%	6.3V
C127	1-162-964-11	CERAMIC CHIP	0.001uF	10%	50V
C131	1-135-070-00	TANTALUM CHIP	0.1uF	10%	35V
C132	1-164-156-11	CERAMIC CHIP	0.1uF		25V
C133	1-110-569-11	TANTAL. CHIP	47uF	20%	6.3V
C200	1-135-181-21	TANTALUM CHIP	4.7uF	20%	6.3V
C201	1-135-070-00	TANTALUM CHIP	0.1uF	10%	35V
C202	1-135-181-21	TANTALUM CHIP	4.7uF	20%	6.3V
C203	1-135-259-11	TANTAL. CHIP	10uF	20%	6.3V
C206	1-135-259-11	TANTAL. CHIP	10uF	20%	6.3V
C207	1-135-181-21	TANTALUM CHIP	4.7uF	20%	6.3V
C208	1-135-181-21	TANTALUM CHIP	4.7uF	20%	6.3V
C209	1-135-181-21	TANTALUM CHIP	4.7uF	20%	6.3V
C210	1-162-966-11	CERAMIC CHIP	0.0022uF	10%	50V
C211	1-162-928-11	CERAMIC CHIP	120PF	5%	50V
C212	1-164-217-11	CERAMIC CHIP	150PF	5%	50V
C213	1-164-217-11	CERAMIC CHIP	150PF	5%	50V
C214	1-162-926-11	CERAMIC CHIP	82PF	5%	50V
C215	1-162-926-11	CERAMIC CHIP	82PF	5%	50V
C216	1-135-259-11	TANTAL. CHIP	10uF	20%	6.3V
C217	1-164-156-11	CERAMIC CHIP	0.1uF		25V
C218	1-135-181-21	TANTALUM CHIP	4.7uF	20%	6.3V
C219	1-135-181-21	TANTALUM CHIP	4.7uF	20%	6.3V
C221	1-135-181-21	TANTALUM CHIP	4.7uF	20%	6.3V
C222	1-135-259-11	TANTAL. CHIP	10uF	20%	6.3V
C223	1-164-156-11	CERAMIC CHIP	0.1uF		25V
C224	1-162-925-11	CERAMIC CHIP	68PF	5%	50V
C225	1-135-259-11	TANTAL. CHIP	10uF	20%	6.3V

Ref. No.	Part No.	Description			Remarks
C226	1-135-181-21	TANTALUM CHIP	4.7uF	20%	6.3V
C227	1-162-964-11	CERAMIC CHIP	0.001uF	10%	50V
C231	1-135-070-00	TANTALUM CHIP	0.1uF	10%	35V
C232	1-164-156-11	CERAMIC CHIP	0.1uF		25V
C233	1-110-569-11	TANTAL. CHIP	47uF	20%	6.3V
C901	1-115-412-11	CERAMIC CHIP	680PF	5%	25V
C902	1-164-156-11	CERAMIC CHIP	0.1uF		25V
C903	1-164-489-11	CERAMIC CHIP	0.22uF	10%	16V
C905	1-115-467-11	CERAMIC CHIP	0.22uF	10%	10V
C906	1-109-982-11	CERAMIC CHIP	1uF	10%	10V
C907	1-164-156-11	CERAMIC CHIP	0.1uF		25V
C908	1-164-489-11	CERAMIC CHIP	0.22uF	10%	16V
C911	1-113-981-11	TANTAL. CHIP	22uF	20%	20V
C912	1-113-981-11	TANTAL. CHIP	22uF	20%	20V
C914	1-164-156-11	CERAMIC CHIP	0.1uF		25V
C916	1-164-156-11	CERAMIC CHIP	0.1uF		25V
C917	1-164-156-11	CERAMIC CHIP	0.1uF		25V
C918	1-113-985-11	TANTAL. CHIP	10uF	20%	20V
C919	1-164-156-11	CERAMIC CHIP	0.1uF		25V
C920	1-164-156-11	CERAMIC CHIP	0.1uF		25V
C921	1-164-227-11	CERAMIC CHIP	0.022uF	10%	25V
C922	1-164-156-11	CERAMIC CHIP	0.1uF		25V
C923	1-164-156-11	CERAMIC CHIP	0.1uF		25V
C924	1-135-259-11	TANTAL. CHIP	10uF	20%	6.3V
C925	1-164-156-11	CERAMIC CHIP	0.1uF		25V
C926	1-164-156-11	CERAMIC CHIP	0.1uF		25V
C927	1-109-982-11	CERAMIC CHIP	1uF	10%	10V
C928	1-162-974-11	CERAMIC CHIP	0.01uF		50V
C929	1-164-156-11	CERAMIC CHIP	0.1uF		25V
C930	1-104-851-11	TANTAL. CHIP	10uF	20%	10V

< CONNECTOR >

CN002	1-691-492-21	CONNECTOR, FFC/FPC 13P	
* CN004	1-770-451-21	CONNECTOR, BOARD TO BOARD 70P	
CN901	1-573-368-11	CONNECTOR, FFC/FPC 28P	
CN902	1-691-494-21	CONNECTOR, FFC/FPC 15P	
CN906	1-770-542-21	CONNECTOR, FFC/FPC 40P	
CN907	1-691-492-21	CONNECTOR, FFC/FPC 13P	
CN908	1-691-485-21	CONNECTOR, FFC/FPC 6P	
* CN909	1-580-056-21	PIN, CONNECTOR 3P	
CN911	1-569-775-21	PIN, CONNECTOR 5P	
CN912	1-569-478-21	CONNECTOR, FPC 20P	
CN913	1-569-775-21	PIN, CONNECTOR 5P	
CN914	1-573-364-11	CONNECTOR, FFC/FPC 24P	
* CN915	1-770-451-21	CONNECTOR, BOARD TO BOARD 70P	
CN916	1-774-024-21	CONNECTOR, FFC/FPC (ZIF) 34P	
CN917	1-774-024-21	CONNECTOR, FFC/FPC (ZIF) 34P	
CN918	1-580-055-21	PIN, CONNECTOR 2P	
* CN919	1-580-056-21	PIN, CONNECTOR (SMD) 3P	

< DIODE >

D001	8-719-404-49	DIODE	MA111
D003	8-719-404-49	DIODE	MA111
D004	8-719-404-49	DIODE	MA111
D006	8-719-404-49	DIODE	MA111
D010	8-719-404-49	DIODE	MA111

AU-192

Ref. No.	Part No.	Description	Remarks
D011	8-719-404-16	DIODE MA713	
D012	8-719-404-16	DIODE MA713	
D013	8-719-027-48	DIODE MA142WA	
D014	8-719-404-49	DIODE MA111	
D015	8-719-404-49	DIODE MA111	
D021	8-719-404-49	DIODE MA111	
D022	8-719-027-50	DIODE MA142WK	
D023	8-719-404-49	DIODE MA111	
D901	8-719-938-78	DIODE SB10-05PCP	

< IC >

IC002	8-759-111-56	IC	uPC4572G2
IC003	8-759-111-56	IC	uPC4572G2
IC004	8-759-089-61	IC	TC74HC4052AFS(EL)
IC005	8-759-512-62	IC	CXA1497AN
IC006	8-759-512-62	IC	CXA1497AN
IC007	8-759-710-79	IC	NJM2107F
IC008	8-759-252-90	IC	TLV2362IPW-ELM1500
IC009	8-759-252-90	IC	TLV2362IPW-ELM1500
IC010	8-759-082-61	IC	TC4W53FU
IC011	8-759-326-98	IC	AK4503-VF-E2
IC012	8-759-252-90	IC	TLV2362IPW-ELM1500
IC014	8-752-362-00	IC	CXD2707Q
IC015	8-759-058-41	IC	NJM3416V
IC016	8-759-089-61	IC	TC74HC4052AFS(EL)
IC017	8-759-299-00	IC	BA7785FS-E2
IC018	8-759-518-90	IC	MB88362PFV
IC901	8-759-166-48	IC	MB3778PFV
IC902	8-759-011-65	IC	MC74HC4053F
IC904	8-759-239-55	IC	TC74HC123AF
IC905	8-759-082-59	IC	TC7W32FU
IC906	8-759-428-89	IC	MB88364PFV-G-BND-ER
IC907	8-759-324-99	IC	MM1118XFBE

< COIL >

L001	1-412-029-11	INDUCTOR CHIP 10uH	
L002	1-412-029-11	INDUCTOR CHIP 10uH	
L003	1-412-029-11	INDUCTOR CHIP 10uH	
L004	1-412-029-11	INDUCTOR CHIP 10uH	
L005	1-412-029-11	INDUCTOR CHIP 10uH	
L006	1-412-029-11	INDUCTOR CHIP 10uH	
L901	1-409-529-41	COIL, CHOKE 10uH	
L903	1-409-537-41	COIL, CHOKE 220uH	
L904	1-409-529-41	COIL, CHOKE 10uH	
L905	1-414-398-11	INDUCTOR 10uH	

< IC LINK >

⚠PS901	1-576-123-21	LINK, IC 800mA	

< TRANSISTOR >

Q003	8-729-420-12	TRANSISTOR	XN4213
Q004	8-729-420-12	TRANSISTOR	XN4213
Q005	8-729-420-12	TRANSISTOR	XN4213
Q006	8-729-420-12	TRANSISTOR	XN4213
Q007	8-729-420-12	TRANSISTOR	XN4213

Ref. No.	Part No.	Description	Remarks
Q008	8-729-420-20	TRANSISTOR XN4312	
Q009	8-729-026-53	TRANSISTOR 2SA1576A-T106-QR	
Q010	8-729-026-53	TRANSISTOR 2SA1576A-T106-QR	
Q011	8-729-402-81	TRANSISTOR XN4501	
Q012	8-729-420-12	TRANSISTOR XN4213	
Q013	8-729-402-81	TRANSISTOR XN4501	
Q014	8-729-402-42	TRANSISTOR UN5213	
Q015	8-729-905-23	TRANSISTOR 2SA1576-R	
Q017	8-729-402-42	TRANSISTOR UN5213	
Q018	8-729-141-48	TRANSISTOR 2SB624-BV345	
Q019	8-729-905-38	TRANSISTOR 2SC4081T106R	
Q902	8-729-012-64	TRANSISTOR 2SB1396-S/T/U-TD	
Q903	8-729-905-23	TRANSISTOR 2SA1576-R	
Q904	8-729-905-38	TRANSISTOR 2SC4081T106R	
Q905	8-729-420-53	TRANSISTOR UN5115	
Q906	8-729-402-42	TRANSISTOR UN5213	
Q907	8-729-905-23	TRANSISTOR 2SA1576-R	
Q908	8-729-905-23	TRANSISTOR 2SA1576-R	
Q909	8-729-402-42	TRANSISTOR UN5213	
Q910	8-729-808-41	TRANSISTOR 2SD1624-S	

< RESISTOR >

R001	1-216-845-11	METAL CHIP	100K	5%	1/16W
R002	1-216-821-11	METAL CHIP	1K	5%	1/16W
R003	1-216-821-11	METAL CHIP	1K	5%	1/16W
R004	1-216-821-11	METAL CHIP	1K	5%	1/16W
R005	1-216-821-11	METAL CHIP	1K	5%	1/16W
R006	1-216-864-11	METAL CHIP	0	5%	1/16W
R009	1-216-864-11	METAL CHIP	0	5%	1/16W
R011	1-216-864-11	METAL CHIP	0	5%	1/16W
R012	1-216-845-11	METAL CHIP	100K	5%	1/16W
R016	1-216-864-11	METAL CHIP	0	5%	1/16W
R017	1-216-864-11	METAL CHIP	0	5%	1/16W
R021	1-216-861-11	METAL CHIP	2.2M	5%	1/16W
R022	1-216-833-11	METAL CHIP	10K	5%	1/16W
R023	1-216-833-11	METAL CHIP	10K	5%	1/16W
R024	1-216-864-11	METAL CHIP	0	5%	1/16W
R025	1-218-871-11	METAL CHIP	10K	0.50%	1/16W
R026	1-216-861-11	METAL CHIP	2.2M	5%	1/16W
R027	1-216-801-11	METAL CHIP	22	5%	1/16W
R028	1-216-821-11	METAL CHIP	1K	5%	1/16W
R029	1-216-833-11	METAL CHIP	10K	5%	1/16W
R031	1-216-861-11	METAL CHIP	2.2M	5%	1/16W
R033	1-218-871-11	METAL CHIP	10K	0.50%	1/16W
R034	1-216-864-11	METAL CHIP	0	5%	1/16W
R035	1-216-861-11	METAL CHIP	2.2M	5%	1/16W
R036	1-216-801-11	METAL CHIP	22	5%	1/16W
R037	1-216-821-11	METAL CHIP	1K	5%	1/16W
R038	1-216-833-11	METAL CHIP	10K	5%	1/16W
R039	1-216-845-11	METAL CHIP	100K	5%	1/16W
R040	1-216-845-11	METAL CHIP	100K	5%	1/16W
R041	1-216-845-11	METAL CHIP	100K	5%	1/16W

Note : The components identified by mark ⚠ or dotted line with mark ⚠ are critical for safety.
Replace only with part number specified.

Ref. No.	Part No.	Description			Remarks
R043	1-216-841-11	METAL CHIP	47K	5%	1/16W
R044	1-216-835-11	METAL CHIP	15K	5%	1/16W
R045	1-216-841-11	METAL CHIP	47K	5%	1/16W
R046	1-216-843-11	METAL CHIP	68K	5%	1/16W
R047	1-216-843-11	METAL CHIP	68K	5%	1/16W
R048	1-216-843-11	METAL CHIP	68K	5%	1/16W
R049	1-216-844-11	METAL CHIP	82K	5%	1/16W
R050	1-216-837-11	METAL CHIP	22K	5%	1/16W
R051	1-216-841-11	METAL CHIP	47K	5%	1/16W
R052	1-216-843-11	METAL CHIP	68K	5%	1/16W
R053	1-216-845-11	METAL CHIP	100K	5%	1/16W
R054	1-216-843-11	METAL CHIP	68K	5%	1/16W
R055	1-216-845-11	METAL CHIP	100K	5%	1/16W
R056	1-216-841-11	METAL CHIP	47K	5%	1/16W
R057	1-216-841-11	METAL CHIP	47K	5%	1/16W
R058	1-216-841-11	METAL CHIP	47K	5%	1/16W
R061	1-216-845-11	METAL CHIP	100K	5%	1/16W
R062	1-216-797-11	METAL CHIP	10	5%	1/16W
R064	1-216-864-11	METAL CHIP	0	5%	1/16W
R065	1-216-845-11	METAL CHIP	100K	5%	1/16W
R069	1-216-864-11	METAL CHIP	0	5%	1/16W
R071	1-216-813-11	METAL CHIP	220	5%	1/16W
R072	1-216-841-11	METAL CHIP	47K	5%	1/16W
R073	1-216-841-11	METAL CHIP	47K	5%	1/16W
R074	1-216-829-11	METAL CHIP	4.7K	5%	1/16W
R075	1-216-813-11	METAL CHIP	220	5%	1/16W
R080	1-216-845-11	METAL CHIP	100K	5%	1/16W
R083	1-216-821-11	METAL CHIP	1K	5%	1/16W
R084	1-216-821-11	METAL CHIP	1K	5%	1/16W
R085	1-216-825-11	METAL CHIP	2.2K	5%	1/16W
R091	1-216-829-11	METAL CHIP	4.7K	5%	1/16W
R092	1-216-827-11	METAL CHIP	3.3K	5%	1/16W
R098	1-216-833-11	METAL CHIP	10K	5%	1/16W
R099	1-216-833-11	METAL CHIP	10K	5%	1/16W
R100	1-216-864-11	METAL CHIP	0	5%	1/16W
R102	1-216-845-11	METAL CHIP	100K	5%	1/16W
R103	1-218-889-11	METAL CHIP	56K	0.50%	1/16W
R104	1-216-837-11	METAL CHIP	22K	5%	1/16W
R105	1-218-883-11	METAL CHIP	33K	0.50%	1/16W
R106	1-216-837-11	METAL CHIP	22K	5%	1/16W
R107	1-218-883-11	METAL CHIP	33K	0.50%	1/16W
R108	1-218-883-11	METAL CHIP	33K	0.50%	1/16W
R109	1-216-845-11	METAL CHIP	100K	5%	1/16W
R110	1-216-817-11	METAL CHIP	470	5%	1/16W
R111	1-216-845-11	METAL CHIP	100K	5%	1/16W
R112	1-216-817-11	METAL CHIP	470	5%	1/16W
R115	1-218-869-11	METAL CHIP	8.2K	0.50%	1/16W
R116	1-218-869-11	METAL CHIP	8.2K	0.50%	1/16W
R121	1-218-879-11	METAL CHIP	22K	0.50%	1/16W
R122	1-218-889-11	METAL CHIP	56K	0.50%	1/16W
R123	1-218-879-11	METAL CHIP	22K	0.50%	1/16W
R124	1-218-879-11	METAL CHIP	22K	0.50%	1/16W
R125	1-218-879-11	METAL CHIP	22K	0.50%	1/16W
R127	1-218-883-11	METAL CHIP	33K	0.50%	1/16W
R128	1-218-883-11	METAL CHIP	33K	0.50%	1/16W

Ref. No.	Part No.	Description			Remarks
R129	1-218-891-11	METAL CHIP	68K	0.50%	1/16W
R130	1-218-891-11	METAL CHIP	68K	0.50%	1/16W
R131	1-216-837-11	METAL CHIP	22K	5%	1/16W
R132	1-216-837-11	METAL CHIP	22K	5%	1/16W
R142	1-218-887-11	METAL CHIP	47K	0.50%	1/16W
R143	1-218-887-11	METAL CHIP	47K	0.50%	1/16W
R144	1-216-845-11	METAL CHIP	100K	5%	1/16W
R145	1-218-873-11	METAL CHIP	12K	0.50%	1/16W
R146	1-218-871-11	METAL CHIP	10K	0.50%	1/16W
R147	1-216-821-11	METAL CHIP	1K	5%	1/16W
R148	1-216-841-11	METAL CHIP	47K	5%	1/16W
R149	1-216-821-11	METAL CHIP	1K	5%	1/16W
R151	1-216-802-11	METAL GLAZE	27	5%	1/16W
R152	1-216-845-11	METAL CHIP	100K	5%	1/16W
R153	1-216-821-11	METAL CHIP	1K	5%	1/16W
R161	1-216-864-11	METAL CHIP	0	5%	1/16W
R162	1-216-829-11	METAL CHIP	4.7K	5%	1/16W
R163	1-216-822-11	METAL CHIP	1.2K	5%	1/16W
R200	1-216-864-11	METAL CHIP	0	5%	1/16W
R202	1-216-845-11	METAL CHIP	100K	5%	1/16W
R203	1-218-889-11	METAL CHIP	56K	0.50%	1/16W
R204	1-216-837-11	METAL CHIP	22K	5%	1/16W
R205	1-218-883-11	METAL CHIP	33K	0.50%	1/16W
R206	1-216-837-11	METAL CHIP	22K	5%	1/16W
R207	1-218-883-11	METAL CHIP	33K	0.50%	1/16W
R208	1-218-883-11	METAL CHIP	33K	0.50%	1/16W
R209	1-216-845-11	METAL CHIP	100K	5%	1/16W
R210	1-216-817-11	METAL CHIP	470	5%	1/16W
R211	1-216-845-11	METAL CHIP	100K	5%	1/16W
R212	1-216-817-11	METAL CHIP	470	5%	1/16W
R215	1-218-869-11	METAL CHIP	8.2K	0.50%	1/16W
R221	1-218-879-11	METAL CHIP	22K	0.50%	1/16W
R222	1-218-889-11	METAL CHIP	56K	0.50%	1/16W
R223	1-218-879-11	METAL CHIP	22K	0.50%	1/16W
R224	1-218-879-11	METAL CHIP	22K	0.50%	1/16W
R225	1-218-879-11	METAL CHIP	22K	0.50%	1/16W
R227	1-218-883-11	METAL CHIP	33K	0.50%	1/16W
R228	1-218-883-11	METAL CHIP	33K	0.50%	1/16W
R229	1-218-891-11	METAL CHIP	68K	0.50%	1/16W
R230	1-218-891-11	METAL CHIP	68K	0.50%	1/16W
R231	1-216-837-11	METAL CHIP	22K	5%	1/16W
R232	1-216-837-11	METAL CHIP	22K	5%	1/16W
R242	1-218-887-11	METAL CHIP	47K	0.50%	1/16W
R243	1-218-887-11	METAL CHIP	47K	0.50%	1/16W
R244	1-216-845-11	METAL CHIP	100K	5%	1/16W
R245	1-218-873-11	METAL CHIP	12K	0.50%	1/16W
R246	1-218-871-11	METAL CHIP	10K	0.50%	1/16W
R247	1-216-821-11	METAL CHIP	1K	5%	1/16W
R248	1-216-841-11	METAL CHIP	47K	5%	1/16W
R249	1-216-821-11	METAL CHIP	1K	5%	1/16W
R251	1-216-802-11	METAL GLAZE	27	5%	1/16W
R252	1-216-845-11	METAL CHIP	100K	5%	1/16W
R253	1-216-821-11	METAL CHIP	1K	5%	1/16W
R902	1-216-833-11	METAL CHIP	10K	5%	1/16W
R905	1-216-833-11	METAL CHIP	10K	5%	1/16W

Ref. No.	Part No.	Description			Remarks
R909	1-216-833-11	METAL CHIP	10K	5%	1/16W
R910	1-216-829-11	METAL CHIP	4.7K	5%	1/16W
R912	1-216-833-11	METAL CHIP	10K	5%	1/16W
R913	1-218-330-11	METAL GLAZE	11K	5%	1/16W
R915	1-216-864-11	METAL CHIP	0	5%	1/16W
R916	1-216-844-11	METAL CHIP	82K	5%	1/16W
R918	1-216-845-11	METAL CHIP	100K	5%	1/16W
R919	1-216-829-11	METAL CHIP	4.7K	5%	1/16W
R920	1-216-833-11	METAL CHIP	10K	5%	1/16W
R921	1-216-813-11	METAL CHIP	220	5%	1/16W
R922	1-216-821-11	METAL CHIP	1K	5%	1/16W
R923	1-216-825-11	METAL CHIP	2.2K	5%	1/16W
R926	1-216-864-11	METAL CHIP	0	5%	1/16W
R927	1-218-855-11	METAL CHIP	2.2K	0.50%	1/16W
R928	1-218-875-11	METAL CHIP	15K	0.50%	1/16W
R929	1-216-801-11	METAL CHIP	22	5%	1/16W
R930	1-216-809-11	METAL CHIP	100	5%	1/16W
R931	1-216-841-11	METAL CHIP	47K	5%	1/16W
R932	1-216-829-11	METAL CHIP	4.7K	5%	1/16W
R933	1-216-833-11	METAL CHIP	10K	5%	1/16W
R934	1-216-833-11	METAL CHIP	10K	5%	1/16W
R935	1-216-833-11	METAL CHIP	10K	5%	1/16W
R936	1-216-833-11	METAL CHIP	10K	5%	1/16W
R937	1-216-815-11	METAL CHIP	330	5%	1/16W
R938	1-216-835-11	METAL CHIP	15K	5%	1/16W
R939	1-216-801-11	METAL CHIP	22	5%	1/16W
R941	1-218-849-11	METAL CHIP	1.2K	0.50%	1/16W
R942	1-218-841-11	METAL GLAZE	560	0.50%	1/16W
R943	1-218-841-11	METAL GLAZE	560	0.50%	1/16W
R944	1-218-855-11	METAL CHIP	2.2K	0.50%	1/16W
R945	1-216-844-11	METAL CHIP	82K	5%	1/16W
R946	1-216-821-11	METAL CHIP	1K	5%	1/16W
R948	1-216-845-11	METAL CHIP	100K	5%	1/16W
R949	1-216-845-11	METAL CHIP	100K	5%	1/16W
R950	1-216-845-11	METAL CHIP	100K	5%	1/16W
R951	1-216-845-11	METAL CHIP	100K	5%	1/16W
R952	1-216-845-11	METAL CHIP	100K	5%	1/16W
R953	1-216-845-11	METAL CHIP	100K	5%	1/16W
R954	1-216-845-11	METAL CHIP	100K	5%	1/16W
R955	1-216-845-11	METAL CHIP	100K	5%	1/16W
R956	1-216-864-11	METAL CHIP	0	5%	1/16W
R957	1-216-845-11	METAL CHIP	100K	5%	1/16W
R959	1-218-871-11	METAL CHIP	10K	0.50%	1/16W
R960	1-218-880-11	METAL CHIP	24K	0.50%	1/16W
R961	1-216-845-11	METAL CHIP	100K	5%	1/16W
R962	1-216-845-11	METAL CHIP	100K	5%	1/16W
R964	1-216-845-11	METAL CHIP	100K	5%	1/16W
R965	1-216-845-11	METAL CHIP	100K	5%	1/16W
R966	1-216-845-11	METAL CHIP	100K	5%	1/16W
R967	1-216-845-11	METAL CHIP	100K	5%	1/16W
R968	1-216-829-11	METAL CHIP	4.7K	5%	1/16W
R972	1-216-826-11	METAL CHIP	2.7K	5%	1/16W

Ref. No.	Part No.	Description			
		< CONPOSITION CIRCUIT BLOCK >			
RB002	1-236-436-11	NETWORK, RES 100K			
RB003	1-236-412-11	NETWORK, RES 1.0K			
RB004	1-236-436-11	NETWORK, RES 100K			
		< VARIABLE RESISTOR >			
RV001	1-225-348-11	RES, VAR, CARBON 20K/20K (REC LEVEL L)			
RV002	1-225-348-11	RES, VAR, CARBON 20K/20K (REC LEVEL R)			
	A-7066-869-A	CB-54P BOARD, COMPLETE			
		**********			
		(Ref.No.1,000 Series)			
		< CAPACITOR >			
C001	1-162-964-11	CERAMIC CHIP	0.001uF	10%	50V
C002	1-162-964-11	CERAMIC CHIP	0.001uF	10%	50V
C004	1-162-964-11	CERAMIC CHIP	0.001uF	10%	50V
C005	1-164-156-11	CERAMIC CHIP	0.1uF		25V
C006	1-164-156-11	CERAMIC CHIP	0.1uF		25V
C007	1-164-156-11	CERAMIC CHIP	0.1uF		25V
C012	1-135-145-11	TANTALUM CHIP	0.47uF	10%	35V
C013	1-135-145-11	TANTALUM CHIP	0.47uF	10%	35V
C014	1-135-145-11	TANTALUM CHIP	0.47uF	10%	35V
C015	1-165-319-11	CERAMIC CHIP	0.1uF		50V
C016	1-165-319-11	CERAMIC CHIP	0.1uF		50V
C017	1-165-319-11	CERAMIC CHIP	0.1uF		50V
C020	1-104-851-11	TANTAL. CHIP	10uF	20%	10V
C021	1-164-360-11	CERAMIC CHIP	0.1uF		16V
C022	1-164-360-11	CERAMIC CHIP	0.1uF		16V
C023	1-164-360-11	CERAMIC CHIP	0.1uF		16V
C024	1-162-974-11	CERAMIC CHIP	0.01uF		50V
C025	1-135-201-11	TANTALUM CHIP	10uF	20%	4V
C026	1-162-964-11	CERAMIC CHIP	0.001uF	10%	50V
C027	1-162-964-11	CERAMIC CHIP	0.001uF	10%	50V
C028	1-162-964-11	CERAMIC CHIP	0.001uF	10%	50V
C029	1-165-319-11	CERAMIC CHIP	0.1uF		50V
C030	1-164-360-11	CERAMIC CHIP	0.1uF		16V
C031	1-165-319-11	CERAMIC CHIP	0.1uF		50V
C032	1-164-360-11	CERAMIC CHIP	0.1uF		16V
C033	1-165-319-11	CERAMIC CHIP	0.1uF		50V
C034	1-164-360-11	CERAMIC CHIP	0.1uF		16V
C035	1-135-214-21	TANTAL. CHIP	4.7uF	20%	20V
C036	1-135-214-21	TANTAL. CHIP	4.7uF	20%	20V
C037	1-135-214-21	TANTAL. CHIP	4.7uF	20%	20V
C038	1-162-974-11	CERAMIC CHIP	0.01uF		50V
C040	1-162-974-11	CERAMIC CHIP	0.01uF		50V
C042	1-162-974-11	CERAMIC CHIP	0.01uF		50V
C044	1-164-360-11	CERAMIC CHIP	0.1uF		16V
C045	1-164-346-11	CERAMIC CHIP	1uF		16V
C046	1-135-201-11	TANTALUM CHIP	10uF	20%	4V
C047	1-162-964-11	CERAMIC CHIP	0.001uF	10%	50V
C048	1-135-091-00	TANTALUM CHIP	1uF	20%	16V

Ref. No.	Part No.	Description			Remarks
C049	1-135-091-00	TANTALUM CHIP	1uF	20%	16V
C050	1-162-913-11	CERAMIC CHIP	8PF	0.5PF	50V
C051	1-135-091-00	TANTALUM CHIP	1uF	20%	16V
C052	1-162-964-11	CERAMIC CHIP	0.001uF	10%	50V
C053	1-135-091-00	TANTALUM CHIP	1uF	20%	16V
C054	1-135-091-00	TANTALUM CHIP	1uF	20%	16V
C055	1-135-091-00	TANTALUM CHIP	1uF	20%	16V
C056	1-110-569-11	TANTAL. CHIP	47uF	20%	6.3V
C057	1-135-201-11	TANTALUM CHIP	10uF	20%	4V
C058	1-135-201-11	TANTALUM CHIP	10uF	20%	4V
C059	1-162-974-11	CERAMIC CHIP	0.01uF		50V
C060	1-164-360-11	CERAMIC CHIP	0.1uF		16V
C061	1-164-346-11	CERAMIC CHIP	1uF		16V
C062	1-110-569-11	TANTAL. CHIP	47uF	20%	6.3V
C063	1-135-259-11	TANTAL. CHIP	10uF	20%	6.3V
C064	1-162-974-11	CERAMIC CHIP	0.01uF		50V
C066	1-162-974-11	CERAMIC CHIP	0.01uF		50V
C067	1-135-070-00	TANTALUM CHIP	0.1uF	10%	35V
C068	1-135-070-00	TANTALUM CHIP	0.1uF	10%	35V
C069	1-135-070-00	TANTALUM CHIP	0.1uF	10%	35V
C070	1-164-346-11	CERAMIC CHIP	1uF		16V
C071	1-135-181-21	TANTALUM CHIP	4.7uF	20%	6.3V
C072	1-135-181-21	TANTALUM CHIP	4.7uF	20%	6.3V
C073	1-135-181-21	TANTALUM CHIP	4.7uF	20%	6.3V
C075	1-110-569-11	TANTAL. CHIP	47uF	20%	6.3V
C076	1-162-916-11	CERAMIC CHIP	12PF	5%	50V
C077	1-110-569-11	TANTAL. CHIP	47uF	20%	6.3V
C078	1-110-569-11	TANTAL. CHIP	47uF	20%	6.3V
C079	1-110-569-11	TANTAL. CHIP	47uF	20%	6.3V
C080	1-110-569-11	TANTAL. CHIP	47uF	20%	6.3V
C081	1-162-964-11	CERAMIC CHIP	0.001uF	10%	50V
C082	1-162-964-11	CERAMIC CHIP	0.001uF	10%	50V
C083	1-162-964-11	CERAMIC CHIP	0.001uF	10%	50V
C084	1-162-965-11	CERAMIC CHIP	0.0015uF	10%	50V
C085	1-162-965-11	CERAMIC CHIP	0.0015uF	10%	50V
C086	1-162-920-11	CERAMIC CHIP	27PF	5%	50V
C087	1-162-920-11	CERAMIC CHIP	27PF	5%	50V
C088	1-162-920-11	CERAMIC CHIP	27PF	5%	50V
C089	1-135-181-21	TANTALUM CHIP	4.7uF	20%	6.3V
C090	1-135-181-21	TANTALUM CHIP	4.7uF	20%	6.3V
C091	1-135-181-21	TANTALUM CHIP	4.7uF	20%	6.3V
C092	1-164-360-11	CERAMIC CHIP	0.1uF		16V
C093	1-164-360-11	CERAMIC CHIP	0.1uF		16V
C094	1-164-360-11	CERAMIC CHIP	0.1uF		16V
C095	1-162-974-11	CERAMIC CHIP	0.01uF		50V
C096	1-135-151-21	TANTALUM CHIP	4.7uF	20%	4V
C098	1-162-974-11	CERAMIC CHIP	0.01uF		50V
C099	1-135-151-21	TANTALUM CHIP	4.7uF	20%	4V
C100	1-162-974-11	CERAMIC CHIP	0.01uF		50V
C101	1-135-151-21	TANTALUM CHIP	4.7uF	20%	4V
C102	1-162-974-11	CERAMIC CHIP	0.01uF		50V
C103	1-164-346-11	CERAMIC CHIP	1uF		16V
C104	1-164-360-11	CERAMIC CHIP	0.1uF		16V
C105	1-135-201-11	TANTALUM CHIP	10uF	20%	4V
C106	1-135-201-11	TANTALUM CHIP	10uF	20%	4V
C107	1-164-346-11	CERAMIC CHIP	1uF		16V
C108	1-135-201-11	TANTALUM CHIP	10uF	20%	4V
C109	1-104-847-11	TANTAL. CHIP	22uF	20%	4V
C110	1-164-346-11	CERAMIC CHIP	1uF		16V
C111	1-164-346-11	CERAMIC CHIP	1uF		16V
C112	1-135-201-11	TANTALUM CHIP	10uF	20%	4V
C113	1-164-360-11	CERAMIC CHIP	0.1uF		16V
C114	1-164-489-11	CERAMIC CHIP	0.22uF	10%	16V
C117	1-162-974-11	CERAMIC CHIP	0.01uF		50V
C121	1-110-569-11	TANTAL. CHIP	47uF	20%	6.3V
C122	1-162-974-11	CERAMIC CHIP	0.01uF		50V
C123	1-162-974-11	CERAMIC CHIP	0.01uF		50V
C124	1-164-346-11	CERAMIC CHIP	1uF		16V
C125	1-164-346-11	CERAMIC CHIP	1uF		16V
C126	1-164-346-11	CERAMIC CHIP	1uF		16V
C127	1-164-346-11	CERAMIC CHIP	1uF		16V
C128	1-162-974-11	CERAMIC CHIP	0.01uF		50V
C129	1-162-974-11	CERAMIC CHIP	0.01uF		50V
C130	1-162-974-11	CERAMIC CHIP	0.01uF		50V
C131	1-135-151-21	TANTALUM CHIP	4.7uF	20%	4V
C132	1-135-151-21	TANTALUM CHIP	4.7uF	20%	4V
C133	1-135-151-21	TANTALUM CHIP	4.7uF	20%	4V
C199	1-162-927-11	CERAMIC CHIP	100PF	5%	50V
C203	1-164-360-11	CERAMIC CHIP	0.1uF		16V
C204	1-162-974-11	CERAMIC CHIP	0.01uF		50V
C205	1-135-259-11	TANTAL. CHIP	10uF	20%	6.3V
C206	1-162-974-11	CERAMIC CHIP	0.01uF		50V
C208	1-135-259-11	TANTAL. CHIP	10uF	20%	6.3V
C209	1-162-974-11	CERAMIC CHIP	0.01uF		50V
C210	1-115-156-11	CERAMIC CHIP	1uF		10V
C211	1-162-920-11	CERAMIC CHIP	27PF	5%	50V
C213	1-162-974-11	CERAMIC CHIP	0.01uF		50V
C214	1-162-916-11	CERAMIC CHIP	12PF	5%	50V
C215	1-162-906-11	CERAMIC CHIP	1.5PF	0.25PF	50V
C216	1-135-179-21	TANTAL. CHIP	2.2uF	20%	16V
C217	1-162-964-11	CERAMIC CHIP	0.001uF	10%	50V
C218	1-164-360-11	CERAMIC CHIP	0.1uF		16V
C219	1-164-360-11	CERAMIC CHIP	0.1uF		16V
C221	1-162-974-11	CERAMIC CHIP	0.01uF		50V
C225	1-162-974-11	CERAMIC CHIP	0.01uF		50V
C226	1-162-974-11	CERAMIC CHIP	0.01uF		50V
C227	1-135-259-11	TANTAL. CHIP	10uF	20%	6.3V
C228	1-162-974-11	CERAMIC CHIP	0.01uF		50V
C229	1-115-156-11	CERAMIC CHIP	1uF		10V
C231	1-115-156-11	CERAMIC CHIP	1uF		10V
C233	1-135-259-11	TANTAL. CHIP	10uF	20%	6.3V
C235	1-162-974-11	CERAMIC CHIP	0.01uF		50V
C237	1-162-974-11	CERAMIC CHIP	0.01uF		50V
C238	1-135-091-00	TANTALUM CHIP	1uF	20%	16V
C244	1-164-315-11	CERAMIC CHIP	470PF	5%	50V
C245	1-162-908-11	CERAMIC CHIP	3PF	0.25PF	50V
C246	1-162-920-11	CERAMIC CHIP	27PF	5%	50V
C247	1-162-968-11	CERAMIC CHIP	0.0047uF	10%	50V
C248	1-162-968-11	CERAMIC CHIP	0.0047uF	10%	50V
C249	1-135-145-11	TANTALUM CHIP	0.47uF	10%	35V

CB-54P

Ref. No.	Part No.	Description			Remarks
C250	1-135-145-11	TANTALUM CHIP	0.47uF	10%	35V
C251	1-115-156-11	CERAMIC CHIP	1uF		10V
C253	1-115-156-11	CERAMIC CHIP	1uF		10V
C255	1-162-927-11	CERAMIC CHIP	100PF	5%	50V
C257	1-115-156-11	CERAMIC CHIP	1uF		10V
C258	1-135-259-11	TANTAL. CHIP	10uF	20%	6.3V
C259	1-164-346-11	CERAMIC CHIP	1uF		16V
C261	1-162-964-11	CERAMIC CHIP	0.001uF	10%	50V
C262	1-162-964-11	CERAMIC CHIP	0.001uF	10%	50V
C263	1-162-964-11	CERAMIC CHIP	0.001uF	10%	50V
C264	1-162-964-11	CERAMIC CHIP	0.001uF	10%	50V
C265	1-162-964-11	CERAMIC CHIP	0.001uF	10%	50V
C266	1-162-964-11	CERAMIC CHIP	0.001uF	10%	50V
C267	1-162-964-11	CERAMIC CHIP	0.001uF	10%	50V
C268	1-162-974-11	CERAMIC CHIP	0.01uF		50V
C290	1-162-974-11	CERAMIC CHIP	0.01uF		50V
C291	1-162-974-11	CERAMIC CHIP	0.01uF		50V
C292	1-135-259-11	TANTAL. CHIP	10uF	20%	6.3V
C293	1-135-259-11	TANTAL. CHIP	10uF	20%	6.3V
C294	1-164-360-11	CERAMIC CHIP	0.1uF		16V
C295	1-162-974-11	CERAMIC CHIP	0.01uF		50V
C296	1-164-360-11	CERAMIC CHIP	0.1uF		16V
C297	1-135-259-11	TANTAL. CHIP	10uF	20%	6.3V
C298	1-135-259-11	TANTAL. CHIP	10uF	20%	6.3V
C299	1-135-259-11	TANTAL. CHIP	10uF	20%	6.3V
C300	1-162-964-11	CERAMIC CHIP	0.001uF	10%	50V
C301	1-135-259-11	TANTAL. CHIP	10uF	20%	6.3V
C302	1-164-360-11	CERAMIC CHIP	0.1uF		16V
C303	1-135-091-00	TANTALUM CHIP	1uF	20%	16V
C304	1-162-974-11	CERAMIC CHIP	0.01uF		50V
C305	1-162-974-11	CERAMIC CHIP	0.01uF		50V
C306	1-162-974-11	CERAMIC CHIP	0.01uF		50V
C307	1-164-346-11	CERAMIC CHIP	1uF		16V
C309	1-164-346-11	CERAMIC CHIP	1uF		16V
C310	1-164-360-11	CERAMIC CHIP	0.1uF		16V
C311	1-162-964-11	CERAMIC CHIP	0.001uF	10%	50V
C313	1-164-346-11	CERAMIC CHIP	1uF		16V
C314	1-162-964-11	CERAMIC CHIP	0.001uF	10%	50V
C315	1-162-964-11	CERAMIC CHIP	0.001uF	10%	50V
C316	1-164-346-11	CERAMIC CHIP	1uF		16V
C317	1-164-346-11	CERAMIC CHIP	1uF		16V
C318	1-162-964-11	CERAMIC CHIP	0.001uF	10%	50V
C319	1-164-346-11	CERAMIC CHIP	1uF		16V
C320	1-135-259-11	TANTAL. CHIP	10uF	20%	6.3V
C321	1-164-360-11	CERAMIC CHIP	0.1uF		16V
C322	1-162-974-11	CERAMIC CHIP	0.01uF		50V
C323	1-162-974-11	CERAMIC CHIP	0.01uF		50V
C325	1-164-360-11	CERAMIC CHIP	0.1uF		16V
C326	1-162-964-11	CERAMIC CHIP	0.001uF	10%	50V
C327	1-162-964-11	CERAMIC CHIP	0.001uF	10%	50V
C328	1-162-964-11	CERAMIC CHIP	0.001uF	10%	50V
C329	1-162-974-11	CERAMIC CHIP	0.01uF		50V
C330	1-135-259-11	TANTAL. CHIP	10uF	20%	6.3V
C331	1-164-346-11	CERAMIC CHIP	1uF		16V
C332	1-162-974-11	CERAMIC CHIP	0.01uF		50V
C333	1-162-974-11	CERAMIC CHIP	0.01uF		50V
C334	1-162-964-11	CERAMIC CHIP	0.001uF	10%	50V
C335	1-162-974-11	CERAMIC CHIP	0.01uF		50V
C336	1-135-259-11	TANTAL. CHIP	10uF	20%	6.3V
C337	1-162-974-11	CERAMIC CHIP	0.01uF		50V
C338	1-162-974-11	CERAMIC CHIP	0.01uF		50V
C339	1-135-259-11	TANTAL. CHIP	10uF	20%	6.3V
C340	1-162-964-11	CERAMIC CHIP	0.001uF	10%	50V
C341	1-162-974-11	CERAMIC CHIP	0.01uF		50V
C342	1-162-964-11	CERAMIC CHIP	0.001uF	10%	50V
C343	1-162-974-11	CERAMIC CHIP	0.01uF		50V
C344	1-135-259-11	TANTAL. CHIP	10uF	20%	6.3V
C345	1-162-974-11	CERAMIC CHIP	0.01uF		50V
C347	1-135-181-21	TANTALUM CHIP	4.7uF	20%	6.3V
C348	1-135-145-11	TANTALUM CHIP	0.47uF	10%	35V
C349	1-162-974-11	CERAMIC CHIP	0.01uF		50V
C350	1-135-259-11	TANTAL. CHIP	10uF	20%	6.3V
C351	1-135-145-11	TANTALUM CHIP	0.47uF	10%	35V
C352	1-113-996-11	TANTAL. CHIP	220uF	20%	4V
C353	1-135-259-11	TANTAL. CHIP	10uF	20%	6.3V
C354	1-135-179-21	TANTAL. CHIP	2.2uF	20%	16V
C355	1-135-259-11	TANTAL. CHIP	10uF	20%	6.3V
C356	1-162-974-11	CERAMIC CHIP	0.01uF		50V
C357	1-135-259-11	TANTAL. CHIP	10uF	20%	6.3V
C358	1-164-360-11	CERAMIC CHIP	0.1uF		16V
C359	1-113-996-11	TANTAL. CHIP	220uF	20%	4V
C360	1-135-181-21	TANTALUM CHIP	4.7uF	20%	6.3V
C361	1-164-360-11	CERAMIC CHIP	0.1uF		16V
C362	1-135-259-11	TANTAL. CHIP	10uF	20%	6.3V
C363	1-162-974-11	CERAMIC CHIP	0.01uF		50V
C364	1-162-974-11	CERAMIC CHIP	0.01uF		50V
C365	1-135-259-11	TANTAL. CHIP	10uF	20%	6.3V
C372	1-162-974-11	CERAMIC CHIP	0.01uF		50V
C373	1-135-145-11	TANTALUM CHIP	0.47uF	10%	35V

< CONNECTOR >

CN001	1-750-345-11	CONNECTOR, FFC/EPC (ZIF) 30P	
CN002	1-770-543-21	CONNECTOR, FFC/FPC 40P	
* CN003	1-766-971-21	CONNECTOR, BOARD TO BOARD 42P	
* CN201	1-691-189-11	CONNECTOR, BOARD TO BOARD 48P	
* CN202	1-770-451-21	CONNECTOR, BOARD TO BOARD 70P	
CN290	1-573-364-11	CONNECTOR, FFC/FPC 24P	

< TRIMMER >

CT001	1-141-356-11	CAP, ADJ	
CT201	1-141-424-11	CAP, ADJ	
CT202	1-141-423-61	CAP, ADJ	

< DIODE >

D001	8-719-046-91	DIODE	MA2S111
D002	8-719-046-91	DIODE	MA2S111
D003	8-719-046-91	DIODE	MA2S111
D004	8-719-046-91	DIODE	MA2S111
D005	8-719-046-91	DIODE	MA2S111

CB-54P

Ref. No.	Part No.	Description	Remarks
D006	8-719-046-91	DIODE MA2S111	
D007	8-719-421-67	DIODE MA132WK	
D008	8-719-421-67	DIODE MA132WK	
D009	8-719-421-67	DIODE MA132WK	
D201	8-719-002-81	DIODE 1T363	
D202	8-719-055-86	DIODE KV1470TL1-3	
D297	8-719-046-91	DIODE MA2S111	
		< FILTER >	
FL290	1-233-345-21	FILTER, LOW PASS (5.5MHz)	
FL291	1-233-345-21	FILTER, LOW PASS (5.5MHz)	
FL292	1-233-345-21	FILTER, LOW PASS (5.5MHz)	
FL293	1-415-763-21	DELAY LINE, LC	
FL294	1-415-763-21	DELAY LINE, LC	
FL295	1-233-390-21	FILTER, BAND PASS	
		< IC >	
IC001	8-759-428-90	IC MC68HC11-SC424623FUL	
IC002	8-752-372-14	IC CXD1267AN	
IC003	8-752-372-14	IC CXD1267AN	
IC004	8-752-372-14	IC CXD1267AN	
IC005	8-752-064-37	IC CXA1757R	
IC006	8-752-357-60	IC CXD1264R	
IC007	8-759-278-56	IC AK6440HF-E2	
IC008	8-752-377-29	IC CXD2417AR	
IC009	8-752-364-79	IC CXD2311R	
IC010	8-752-364-79	IC CXD2311R	
IC011	8-752-364-79	IC CXD2311R	
IC012	8-759-328-26	IC CXD2146R-T4	
IC013	8-752-375-84	IC CXD2145AR	
IC014	8-759-064-36	IC MB88346BPFV	
IC015	8-759-064-36	IC MB88346BPFV	
IC016	8-752-377-29	IC CXD2417AR	
IC017	8-759-327-30	IC CXD2158R-T6	
IC018	8-759-080-34	IC TA75W01FU	
IC019	8-759-075-66	IC TA75S01F	
IC201	8-759-278-57	IC AK6420HF-E2	
IC202	8-759-328-16	IC CXD2181R-T6	
IC203	8-759-382-18	IC CXD2182AR	
IC204	8-752-374-89	IC CXD2192Q	
IC205	8-759-343-09	IC CXD2193AR-ER	
IC207	8-759-198-63	IC S-81230SG-QB-T1	
IC290	8-752-371-65	IC CXD2304R	
IC291	8-759-082-60	IC TC7S66FU	
IC292	8-752-053-21	IC CXA1211M	
IC293	8-759-064-36	IC MB88346BPFV	
IC294	8-752-056-59	IC CXA1592R	
IC295	8-759-356-56	IC uPD6461GS-819-GLG-E2	
IC296	8-759-079-53	IC TC74VHCT08FS(EL)	
IC297	8-759-079-52	IC TC74VHC08FS(EL)	
IC298	8-759-186-26	IC TC74VHC02F	
IC299	8-752-053-21	IC CXA1211M	
IC300	8-752-009-51	IC CX20095A	
IC301	8-752-072-86	IC CXA1822Q	
IC302	8-759-082-60	IC TC7S66FU	

Ref. No.	Part No.	Description	Remarks
		< COIL >	
L001	1-414-392-21	INDUCTOR 1uH	
L002	1-414-392-21	INDUCTOR 1uH	
L003	1-414-398-11	INDUCTOR 10uH	
L004	1-414-392-21	INDUCTOR 1uH	
L005	1-414-392-21	INDUCTOR 1uH	
L006	1-414-398-11	INDUCTOR 10uH	
L007	1-414-398-11	INDUCTOR 10uH	
L008	1-414-398-11	INDUCTOR 10uH	
L009	1-414-398-11	INDUCTOR 10uH	
L010	1-414-398-11	INDUCTOR 10uH	
L011	1-414-398-11	INDUCTOR 10uH	
L012	1-414-398-11	INDUCTOR 10uH	
L013	1-414-398-11	INDUCTOR 10uH	
L014	1-414-398-11	INDUCTOR 10uH	
L015	1-414-398-11	INDUCTOR 10uH	
L016	1-414-398-11	INDUCTOR 10uH	
L017	1-414-398-11	INDUCTOR 10uH	
L018	1-414-392-21	INDUCTOR 1uH	
L019	1-414-392-21	INDUCTOR 1uH	
L021	1-414-398-11	INDUCTOR 10uH	
L201	1-414-398-11	INDUCTOR 10uH	
L202	1-414-398-11	INDUCTOR 10uH	
L203	1-414-398-11	INDUCTOR 10uH	
L205	1-411-275-21	COIL, VARIABLE	
L206	1-414-398-11	INDUCTOR 10uH	
L207	1-414-392-21	INDUCTOR 1uH	
L208	1-414-392-21	INDUCTOR 1uH	
L209	1-414-392-21	INDUCTOR 1uH	
L210	1-414-392-21	INDUCTOR 1uH	
L211	1-414-392-21	INDUCTOR 1uH	
L212	1-414-392-21	INDUCTOR 1uH	
L213	1-414-392-21	INDUCTOR 1uH	
L290	1-414-398-11	INDUCTOR 10uH	
L291	1-414-398-11	INDUCTOR 10uH	
L292	1-414-398-11	INDUCTOR 10uH	
L293	1-414-398-11	INDUCTOR 10uH	
L294	1-414-398-11	INDUCTOR 10uH	
L295	1-414-398-11	INDUCTOR 10uH	
L298	1-414-398-11	INDUCTOR 10uH	
L299	1-414-398-11	INDUCTOR 10uH	
L300	1-412-063-21	INDUCTOR CHIP 68uH	
L301	1-414-392-21	INDUCTOR 1uH	
L302	1-414-398-11	INDUCTOR 10uH	
		< TRANSISTOR >	
Q001	8-729-427-70	TRANSISTOR XP4401	
Q002	8-729-427-70	TRANSISTOR XP4401	
Q003	8-729-427-70	TRANSISTOR XP4401	
Q011	8-729-429-18	TRANSISTOR UN9213	
Q290	8-729-106-60	TRANSISTOR 2SB1115A	
Q291	8-729-429-14	TRANSISTOR UN9211	
Q292	8-729-427-74	TRANSISTOR XP4601	
Q293	8-729-427-74	TRANSISTOR XP4601	
Q294	8-729-427-74	TRANSISTOR XP4601	
Q295	8-729-427-74	TRANSISTOR XP4601	

Ref. No.	Part No.	Description	Remarks
Q296	8-729-427-80	TRANSISTOR XP6401	
Q297	8-729-425-50	TRANSISTOR 2SB1462-Q	
Q298	8-729-425-64	TRANSISTOR 2SD2216-Q	
Q301	8-729-425-50	TRANSISTOR 2SB1462-Q	
Q302	8-729-425-50	TRANSISTOR 2SB1462-Q	
Q303	8-729-425-50	TRANSISTOR 2SB1462-Q	
Q304	8-729-428-88	TRANSISTOR UN9113	
Q305	8-729-429-18	TRANSISTOR UN9213	
Q306	8-729-427-80	TRANSISTOR XP6401	
Q307	8-729-106-60	TRANSISTOR 2SB1115A	
Q308	8-729-425-64	TRANSISTOR 2SD2216-Q	
Q309	8-729-425-50	TRANSISTOR 2SB1462-Q	
Q312	8-729-425-64	TRANSISTOR 2SD2216-Q	
Q313	8-729-425-50	TRANSISTOR 2SB1462-Q	
		< RESISTOR >	
R001	1-216-845-11	METAL CHIP 100K 5% 1/16W	
R002	1-216-845-11	METAL CHIP 100K 5% 1/16W	
R003	1-216-845-11	METAL CHIP 100K 5% 1/16W	
R004	1-216-857-11	METAL CHIP 1M 5% 1/16W	
R005	1-216-857-11	METAL CHIP 1M 5% 1/16W	
R006	1-216-857-11	METAL CHIP 1M 5% 1/16W	
R007	1-216-833-11	METAL CHIP 10K 5% 1/16W	
R008	1-216-833-11	METAL CHIP 10K 5% 1/16W	
R009	1-216-833-11	METAL CHIP 10K 5% 1/16W	
R010	1-216-833-11	METAL CHIP 10K 5% 1/16W	
R011	1-216-845-11	METAL CHIP 100K 5% 1/16W	
R012	1-216-845-11	METAL CHIP 100K 5% 1/16W	
R013	1-216-845-11	METAL CHIP 100K 5% 1/16W	
R016	1-216-821-11	METAL CHIP 1K 5% 1/16W	
R017	1-216-851-11	METAL CHIP 330K 5% 1/16W	
R018	1-216-833-11	METAL CHIP 10K 5% 1/16W	
R019	1-216-857-11	METAL CHIP 1M 5% 1/16W	
R020	1-216-841-11	METAL CHIP 47K 5% 1/16W	
R021	1-216-841-11	METAL CHIP 47K 5% 1/16W	
R022	1-216-841-11	METAL CHIP 47K 5% 1/16W	
R023	1-216-845-11	METAL CHIP 100K 5% 1/16W	
R024	1-218-847-11	METAL CHIP 1K 0.50% 1/16W	
R025	1-218-876-11	METAL CHIP 16K 0.50% 1/16W	
R026	1-218-871-11	METAL CHIP 10K 0.50% 1/16W	
R028	1-216-841-11	METAL CHIP 47K 5% 1/16W	
R029	1-216-841-11	METAL CHIP 47K 5% 1/16W	
R030	1-216-841-11	METAL CHIP 47K 5% 1/16W	
R031	1-216-841-11	METAL CHIP 47K 5% 1/16W	
R032	1-216-864-11	METAL CHIP 0 5% 1/16W	
R037	1-216-805-11	METAL CHIP 47 5% 1/16W	
R038	1-216-805-11	METAL CHIP 47 5% 1/16W	
R039	1-216-805-11	METAL CHIP 47 5% 1/16W	
R040	1-216-833-11	METAL CHIP 10K 5% 1/16W	
R041	1-216-807-11	METAL CHIP 68 5% 1/16W	
R042	1-216-807-11	METAL CHIP 68 5% 1/16W	
R043	1-216-807-11	METAL CHIP 68 5% 1/16W	
R047	1-218-877-11	METAL CHIP 18K 0.50% 1/16W	
R049	1-216-864-11	METAL CHIP 0 5% 1/16W	
R056	1-218-851-11	METAL CHIP 1.5K 0.50% 1/16W	
R058	1-218-889-11	METAL CHIP 56K 0.50% 1/16W	

Ref. No.	Part No.	Description	Remarks
R059	1-218-851-11	METAL CHIP 1.5K 0.50% 1/16W	
R060	1-218-889-11	METAL CHIP 56K 0.50% 1/16W	
R062	1-218-851-11	METAL CHIP 1.5K 0.50% 1/16W	
R063	1-218-889-11	METAL CHIP 56K 0.50% 1/16W	
R065	1-216-864-11	METAL CHIP 0 5% 1/16W	
R066	1-216-864-11	METAL CHIP 0 5% 1/16W	
R068	1-216-864-11	METAL CHIP 0 5% 1/16W	
R202	1-216-845-11	METAL CHIP 100K 5% 1/16W	
R205	1-216-821-11	METAL CHIP 1K 5% 1/16W	
R207	1-216-845-11	METAL CHIP 100K 5% 1/16W	
R208	1-216-829-11	METAL CHIP 4.7K 5% 1/16W	
R209	1-216-849-11	METAL CHIP 220K 5% 1/16W	
R212	1-216-833-11	METAL CHIP 10K 5% 1/16W	
R214	1-216-833-11	METAL CHIP 10K 5% 1/16W	
R215	1-216-833-11	METAL CHIP 10K 5% 1/16W	
R216	1-216-864-11	METAL CHIP 0 5% 1/16W	
R219	1-216-864-11	METAL CHIP 0 5% 1/16W	
R220	1-216-839-11	METAL CHIP 33K 5% 1/16W	
R221	1-216-839-11	METAL CHIP 33K 5% 1/16W	
R228	1-216-864-11	METAL CHIP 0 5% 1/16W	
R230	1-216-833-11	METAL CHIP 10K 5% 1/16W	
R231	1-216-864-11	METAL CHIP 0 5% 1/16W	
R232	1-216-829-11	METAL CHIP 4.7K 5% 1/16W	
R233	1-216-864-11	METAL CHIP 0 5% 1/16W	
R235	1-216-864-11	METAL CHIP 0 5% 1/16W	
R236	1-216-833-11	METAL CHIP 10K 5% 1/16W	
R239	1-216-833-11	METAL CHIP 10K 5% 1/16W	
R240	1-216-864-11	METAL CHIP 0 5% 1/16W	
R241	1-216-839-11	METAL CHIP 33K 5% 1/16W	
R242	1-216-864-11	METAL CHIP 0 5% 1/16W	
R244	1-216-829-11	METAL CHIP 4.7K 5% 1/16W	
R245	1-216-833-11	METAL CHIP 10K 5% 1/16W	
R251	1-216-864-11	METAL CHIP 0 5% 1/16W	
R257	1-216-830-11	METAL CHIP 5.6K 5% 1/16W	
R260	1-216-833-11	METAL CHIP 10K 5% 1/16W	
R266	1-216-821-11	METAL CHIP 1K 5% 1/16W	
R268	1-216-864-11	METAL CHIP 0 5% 1/16W	
R272	1-216-839-11	METAL CHIP 33K 5% 1/16W	
R278	1-216-864-11	METAL CHIP 0 5% 1/16W	
R283	1-216-864-11	METAL CHIP 0 5% 1/16W	
R284	1-216-864-11	METAL CHIP 0 5% 1/16W	
R290	1-216-841-11	METAL CHIP 47K 5% 1/16W	
R291	1-216-821-11	METAL CHIP 1K 5% 1/16W	
R292	1-216-821-11	METAL CHIP 1K 5% 1/16W	
R293	1-216-815-11	METAL CHIP 330 5% 1/16W	
R294	1-216-815-11	METAL CHIP 330 5% 1/16W	
R295	1-216-815-11	METAL CHIP 330 5% 1/16W	
R296	1-216-821-11	METAL CHIP 1K 5% 1/16W	
R297	1-216-821-11	METAL CHIP 1K 5% 1/16W	
R298	1-216-833-11	METAL CHIP 10K 5% 1/16W	
R299	1-216-837-11	METAL CHIP 22K 5% 1/16W	
R300	1-216-837-11	METAL CHIP 22K 5% 1/16W	
R301	1-216-821-11	METAL CHIP 1K 5% 1/16W	
R302	1-216-821-11	METAL CHIP 1K 5% 1/16W	
R303	1-216-839-11	METAL CHIP 33K 5% 1/16W	

Ref. No.	Part No.	Description			Remarks
R304	1-216-839-11	METAL CHIP	33K	5%	1/16W
R305	1-216-821-11	METAL CHIP	1K	5%	1/16W
R306	1-216-821-11	METAL CHIP	1K	5%	1/16W
R308	1-216-853-11	METAL CHIP	470K	5%	1/16W
R309	1-216-833-11	METAL CHIP	10K	5%	1/16W
R310	1-216-827-11	METAL CHIP	3.3K	5%	1/16W
R311	1-216-825-11	METAL CHIP	2.2K	5%	1/16W
R312	1-216-825-11	METAL CHIP	2.2K	5%	1/16W
R314	1-216-814-11	METAL CHIP	270	5%	1/16W
R315	1-216-821-11	METAL CHIP	1K	5%	1/16W
R316	1-216-822-11	METAL CHIP	1.2K	5%	1/16W
R317	1-216-864-11	METAL CHIP	0	5%	1/16W
R318	1-216-815-11	METAL CHIP	330	5%	1/16W
R319	1-216-829-11	METAL CHIP	4.7K	5%	1/16W
R320	1-216-829-11	METAL CHIP	4.7K	5%	1/16W
R321	1-216-821-11	METAL CHIP	1K	5%	1/16W
R322	1-216-845-11	METAL CHIP	100K	5%	1/16W
R323	1-216-821-11	METAL CHIP	1K	5%	1/16W
R324	1-216-821-11	METAL CHIP	1K	5%	1/16W
R325	1-216-845-11	METAL CHIP	100K	5%	1/16W
R326	1-216-864-11	METAL CHIP	0	5%	1/16W
R328	1-216-829-11	METAL CHIP	4.7K	5%	1/16W
R329	1-216-825-11	METAL CHIP	2.2K	5%	1/16W
R330	1-216-833-11	METAL CHIP	10K	5%	1/16W
R332	1-216-833-11	METAL CHIP	10K	5%	1/16W
R342	1-216-833-11	METAL CHIP	10K	5%	1/16W
R343	1-216-833-11	METAL CHIP	10K	5%	1/16W
R344	1-216-833-11	METAL CHIP	10K	5%	1/16W
R345	1-216-833-11	METAL CHIP	10K	5%	1/16W
R346	1-216-833-11	METAL CHIP	10K	5%	1/16W
R347	1-216-833-11	METAL CHIP	10K	5%	1/16W
R348	1-216-833-11	METAL CHIP	10K	5%	1/16W
R349	1-216-833-11	METAL CHIP	10K	5%	1/16W
R352	1-216-864-11	METAL CHIP	0	5%	1/16W
R354	1-216-864-11	METAL CHIP	0	5%	1/16W
R361	1-216-839-11	METAL CHIP	33K	5%	1/16W
R362	1-216-864-11	METAL CHIP	0	5%	1/16W
R364	1-216-837-11	METAL CHIP	22K	5%	1/16W
R365	1-216-821-11	METAL CHIP	1K	5%	1/16W
R367	1-216-821-11	METAL CHIP	1K	5%	1/16W
R368	1-216-826-11	METAL CHIP	2.7K	5%	1/16W
R369	1-216-821-11	METAL CHIP	1K	5%	1/16W
R372	1-216-829-11	METAL CHIP	4.7K	5%	1/16W
R373	1-216-833-11	METAL CHIP	10K	5%	1/16W
R374	1-216-845-11	METAL CHIP	100K	5%	1/16W
R375	1-216-829-11	METAL CHIP	4.7K	5%	1/16W
R376	1-216-821-11	METAL CHIP	1K	5%	1/16W
R377	1-216-807-11	METAL CHIP	68	5%	1/16W
R378	1-216-815-11	METAL CHIP	330	5%	1/16W
R379	1-216-853-11	METAL CHIP	470K	5%	1/16W
R380	1-216-853-11	METAL CHIP	470K	5%	1/16W
R381	1-216-845-11	METAL CHIP	100K	5%	1/16W
R382	1-216-841-11	METAL CHIP	47K	5%	1/16W
R383	1-216-833-11	METAL CHIP	10K	5%	1/16W
R384	1-216-807-11	METAL CHIP	68	5%	1/16W

Ref. No.	Part No.	Description			Remarks
R385	1-216-827-11	METAL CHIP	3.3K	5%	1/16W
R386	1-216-827-11	METAL CHIP	3.3K	5%	1/16W
R387	1-216-807-11	METAL CHIP	68	5%	1/16W
R388	1-216-845-11	METAL CHIP	100K	5%	1/16W
R389	1-216-841-11	METAL CHIP	47K	5%	1/16W
R390	1-216-829-11	METAL CHIP	4.7K	5%	1/16W
R391	1-216-791-11	METAL CHIP	3.3	5%	1/16W
R392	1-216-822-11	METAL CHIP	1.2K	5%	1/16W
R393	1-216-831-11	METAL CHIP	6.8K	5%	1/16W
R394	1-216-825-11	METAL CHIP	2.2K	5%	1/16W
R395	1-216-829-11	METAL CHIP	4.7K	5%	1/16W
		< VIBRATOR >			
X001	1-760-657-21	VIBRATOR, CERAMIC 28.375MHZ			
X002	1-760-321-11	VIBRATOR, CRYSTAL 28.375MHZ			
X201	1-579-780-21	VIBRATOR, CRYSTAL 14.1875MHZ			
	A-7072-884-A	CD-160 BOARD, COMPLETE			
		**********			
		(Ref.No.8,000 Series)			
		< CAPACITOR >			
C201	1-104-852-11	TANTAL. CHIP	22uF	20%	10V
C202	1-104-852-11	TANTAL. CHIP	22uF	20%	10V
C203	1-104-852-11	TANTAL. CHIP	22uF	20%	10V
C204	1-104-912-11	TANTAL. CHIP	3.3uF	20%	16V
C206	1-104-912-11	TANTAL. CHIP	3.3uF	20%	16V
C208	1-104-912-11	TANTAL. CHIP	3.3uF	20%	16V
C210	1-162-974-11	CERAMIC CHIP	0.01uF		50V
C211	1-162-974-11	CERAMIC CHIP	0.01uF		50V
C212	1-162-974-11	CERAMIC CHIP	0.01uF		50V
C213	1-104-908-11	TANTAL. CHIP	47uF	20%	4V
C214	1-104-848-11	TANTAL. CHIP	100uF	20%	4V
C215	1-104-848-11	TANTAL. CHIP	100uF	20%	4V
C216	1-162-974-11	CERAMIC CHIP	0.01uF		50V
C217	1-104-917-11	TANTAL. CHIP	15uF	20%	20V
C218	1-162-974-11	CERAMIC CHIP	0.01uF		50V
C219	1-104-917-11	TANTAL. CHIP	15uF	20%	20V
C220	1-162-974-11	CERAMIC CHIP	0.01uF		50V
C221	1-104-917-11	TANTAL. CHIP	15uF	20%	20V
C222	1-104-908-11	TANTAL. CHIP	47uF	20%	4V
		< CONNECTOR >			
* CN201	1-764-396-21	CONNECTOR, BOARD TO BOARD 42P			
		< COIL >			
L201	1-412-032-11	INDUCTOR CHIP 100uH			
L202	1-412-032-11	INDUCTOR CHIP 100uH			
L203	1-412-032-11	INDUCTOR CHIP 100uH			
		< TRANSISTOR >			
Q201	8-729-232-86	TRANSISTOR 2SK1875			
Q202	8-729-232-86	TRANSISTOR 2SK1875			
Q203	8-729-232-86	TRANSISTOR 2SK1875			

Ref. No.	Part No.	Description			Remarks
		< RESISTOR >			
R201	1-216-840-11	METAL CHIP	39K	5%	1/16W
R202	1-216-840-11	METAL CHIP	39K	5%	1/16W
R203	1-216-840-11	METAL CHIP	39K	5%	1/16W
R204	1-216-820-11	METAL CHIP	820	5%	1/16W
R205	1-216-820-11	METAL CHIP	820	5%	1/16W
R206	1-216-820-11	METAL CHIP	820	5%	1/16W
R207	1-216-845-11	METAL CHIP	100K	5%	1/16W
R208	1-216-845-11	METAL CHIP	100K	5%	1/16W
R209	1-216-845-11	METAL CHIP	100K	5%	1/16W
R210	1-216-828-11	METAL CHIP	3.9K	5%	1/16W
R211	1-216-809-11	METAL CHIP	100	5%	1/16W
R212	1-216-828-11	METAL CHIP	3.9K	5%	1/16W
R213	1-216-809-11	METAL CHIP	100	5%	1/16W
R214	1-216-828-11	METAL CHIP	3.9K	5%	1/16W
R215	1-216-809-11	METAL CHIP	100	5%	1/16W
	A-7066-612-A	DD-75P BOARD, COMPLETE			
		**********			
		(Ref.No.6,000 Series)			
	1-656-386-11	FP-199 FLEXIBLE BOARD			
		< CAPACITOR >			
C001	1-165-178-11	CERAMIC CHIP	6.8uF		16V
C002	1-104-851-11	TANTAL. CHIP	10uF	20%	10V
C003	1-104-851-11	TANTAL. CHIP	10uF	20%	10V
C004	1-165-178-11	CERAMIC CHIP	6.8uF		16V
C005	1-104-914-11	TANTAL. CHIP	22uF	20%	16V
C006	1-104-914-11	TANTAL. CHIP	22uF	20%	16V
C007	1-104-914-11	TANTAL. CHIP	22uF	20%	16V
C008	1-104-914-11	TANTAL. CHIP	22uF	20%	16V
C009	1-104-823-11	TANTAL. CHIP	47uF	20%	16V
C010	1-104-914-11	TANTAL. CHIP	22uF	20%	16V
C011	1-165-178-11	CERAMIC CHIP	6.8uF		16V
C012	1-104-851-11	TANTAL. CHIP	10uF	20%	10V
C013	1-104-851-11	TANTAL. CHIP	10uF	20%	10V
C014	1-104-851-11	TANTAL. CHIP	10uF	20%	10V
C015	1-162-915-11	CERAMIC CHIP	10PF	0.5PF	50V
C016	1-164-315-11	CERAMIC CHIP	470PF	5%	50V
C017	1-164-315-11	CERAMIC CHIP	470PF	5%	50V
C018	1-162-919-11	CERAMIC CHIP	22PF	5%	50V
C019	1-165-178-11	CERAMIC CHIP	6.8uF		16V
C020	1-164-315-11	CERAMIC CHIP	470PF	5%	50V
C021	1-164-315-11	CERAMIC CHIP	470PF	5%	50V
C022	1-165-178-11	CERAMIC CHIP	6.8uF		16V
C023	1-162-915-11	CERAMIC CHIP	10PF	0.5PF	50V
C024	1-162-915-11	CERAMIC CHIP	10PF	0.5PF	50V
C025	1-164-315-11	CERAMIC CHIP	470PF	5%	50V
C026	1-164-315-11	CERAMIC CHIP	470PF	5%	50V
C027	1-162-915-11	CERAMIC CHIP	10PF	0.5PF	50V
C028	1-162-915-11	CERAMIC CHIP	10PF	0.5PF	50V
C029	1-165-178-11	CERAMIC CHIP	6.8uF		16V
C030	1-104-851-11	TANTAL. CHIP	10uF	20%	10V

Ref. No.	Part No.	Description			Remarks
C031	1-104-851-11	TANTAL. CHIP	10uF	20%	10V
C032	1-104-851-11	TANTAL. CHIP	10uF	20%	10V
C033	1-104-851-11	TANTAL. CHIP	10uF	20%	10V
C034	1-162-969-11	CERAMIC CHIP	0.0068uF	10%	25V
C035	1-162-969-11	CERAMIC CHIP	0.0068uF	10%	25V
C036	1-164-363-11	CERAMIC CHIP	560PF	5%	50V
C037	1-162-970-11	CERAMIC CHIP	0.01uF	10%	25V
C038	1-113-986-11	TANTAL. CHIP	2.2uF	20%	25V
C039	1-164-821-11	CERAMIC CHIP	3.3uF	10%	16V
C040	1-164-821-11	CERAMIC CHIP	3.3uF	10%	16V
C041	1-104-915-11	TANTAL. CHIP	2.2uF	20%	20V
C042	1-164-363-11	CERAMIC CHIP	560PF	5%	50V
C043	1-162-967-11	CERAMIC CHIP	0.0033uF	10%	50V
C044	1-165-176-11	CERAMIC CHIP	0.047uF	10%	16V
C045	1-162-970-11	CERAMIC CHIP	0.01uF	10%	25V
C046	1-107-826-11	CERAMIC CHIP	0.1uF	10%	16V
C047	1-165-128-11	CERAMIC CHIP	0.22uF		16V
C048	1-165-178-11	CERAMIC CHIP	6.8uF		16V
C049	1-162-969-11	CERAMIC CHIP	0.0068uF	10%	25V
C050	1-164-816-11	CERAMIC CHIP	220PF	2%	50V
C051	1-107-826-11	CERAMIC CHIP	0.1uF	10%	16V
C052	1-164-156-11	CERAMIC CHIP	0.1uF		25V
C053	1-165-178-11	CERAMIC CHIP	6.8uF		16V
C054	1-104-851-11	TANTAL. CHIP	10uF	20%	10V
C055	1-104-851-11	TANTAL. CHIP	10uF	20%	10V
C056	1-104-851-11	TANTAL. CHIP	10uF	20%	10V
C057	1-165-178-11	CERAMIC CHIP	6.8uF		16V
C058	1-104-851-11	TANTAL. CHIP	10uF	20%	10V
C059	1-104-851-11	TANTAL. CHIP	10uF	20%	10V
C060	1-165-178-11	CERAMIC CHIP	6.8uF		16V
C061	1-162-915-11	CERAMIC CHIP	10PF	0.5PF	50V
C062	1-164-315-11	CERAMIC CHIP	470PF	5%	50V
C063	1-164-315-11	CERAMIC CHIP	470PF	5%	50V
C064	1-162-919-11	CERAMIC CHIP	22PF	5%	50V
C065	1-165-178-11	CERAMIC CHIP	6.8uF		16V
C066	1-104-851-11	TANTAL. CHIP	10uF	20%	10V
C067	1-104-851-11	TANTAL. CHIP	10uF	20%	10V
C068	1-164-315-11	CERAMIC CHIP	470PF	5%	50V
C069	1-164-315-11	CERAMIC CHIP	470PF	5%	50V
C070	1-162-915-11	CERAMIC CHIP	10PF	0.5PF	50V
C071	1-162-915-11	CERAMIC CHIP	10PF	0.5PF	50V
C072	1-164-315-11	CERAMIC CHIP	470PF	5%	50V
C073	1-164-315-11	CERAMIC CHIP	470PF	5%	50V
C074	1-162-915-11	CERAMIC CHIP	10PF	0.5PF	50V
C075	1-164-315-11	CERAMIC CHIP	470PF	5%	50V
C076	1-162-915-11	CERAMIC CHIP	10PF	0.5PF	50V
C077	1-104-851-11	TANTAL. CHIP	10uF	20%	10V
C078	1-104-851-11	TANTAL. CHIP	10uF	20%	10V
C079	1-165-178-11	CERAMIC CHIP	6.8uF		16V
C080	1-162-969-11	CERAMIC CHIP	0.0068uF	10%	25V
C081	1-165-178-11	CERAMIC CHIP	6.8uF		16V
C082	1-164-227-11	CERAMIC CHIP	0.022uF	10%	25V
C083	1-162-967-11	CERAMIC CHIP	0.0033uF	10%	50V
C084	1-104-851-11	TANTAL. CHIP	10uF	20%	10V
C085	1-165-178-11	CERAMIC CHIP	6.8uF		16V

Ref. No.	Part No.	Description			Remarks
C086	1-164-227-11	CERAMIC CHIP	0.022uF	10%	25V
C087	1-162-967-11	CERAMIC CHIP	0.0033uF	10%	50V
C088	1-165-176-11	CERAMIC CHIP	0.047uF	10%	16V
C089	1-164-821-11	CERAMIC CHIP	3.3uF	10%	16V
C090	1-162-970-11	CERAMIC CHIP	0.01uF	10%	25V
C091	1-107-826-11	CERAMIC CHIP	0.1uF	10%	16V
C092	1-165-128-11	CERAMIC CHIP	0.22uF		16V
C093	1-162-969-11	CERAMIC CHIP	0.0068uF	10%	25V
C094	1-104-851-11	TANTAL. CHIP	10uF	20%	10V
C095	1-107-826-11	CERAMIC CHIP	0.1uF	10%	16V
C096	1-165-178-11	CERAMIC CHIP	6.8uF		16V
C097	1-164-156-11	CERAMIC CHIP	0.1uF		25V
C098	1-165-178-11	CERAMIC CHIP	6.8uF		16V
C099	1-104-851-11	TANTAL. CHIP	10uF	20%	10V
C100	1-104-914-11	TANTAL. CHIP	22uF	20%	16V
C101	1-162-970-11	CERAMIC CHIP	0.01uF	10%	25V
C102	1-162-970-11	CERAMIC CHIP	0.01uF	10%	25V
C103	1-164-346-11	CERAMIC CHIP	1uF		16V
C201	1-164-156-11	CERAMIC CHIP	0.1uF		25V
		< CONNECTOR >			
CN001	1-770-542-21	CONNECTOR, FFC/FPC 40P			
CN002	1-770-542-21	CONNECTOR, FFC/FPC 40P			
* CN003	1-770-452-21	CONNECTOR, BOARD TO BOARD 30P			
CN200	1-770-585-11	PIN, CONNECTOR (PC BOARD) 3P			
* CN201	1-580-756-21	PIN, CONNECTOR 7P			
		< DIODE >			
D001	8-719-404-49	DIODE MA111			
D002	8-719-989-33	DIODE FC806			
D003	8-719-938-75	DIODE SB05-05CP			
D202	8-719-056-23	DIODE MA2S111-(K8).SO			
D203	8-719-056-23	DIODE MA2S111-(K8).SO			
D204	8-719-056-23	DIODE MA2S111-(K8).SO			
D205	8-719-050-39	DIODE RD2.7UM-T1B			
D206	8-719-056-23	DIODE MA2S111-(K8).SO			
D207	8-719-421-27	DIODE MA728			
D208	8-719-421-27	DIODE MA728			
		< IC >			
IC001	8-759-328-27	IC SN104230PM			
IC002	8-759-328-27	IC SN104230PM			
IC200	8-759-998-92	IC LM393D			
		< COIL >			
L001	1-414-396-21	INDUCTOR 4.7uH			
L002	1-414-396-21	INDUCTOR 4.7uH			
L003	1-406-824-11	COIL, CHOKE 22uH			
L003	1-424-674-11	COIL, CHOKE 22uH			
L004	1-406-823-11	COIL, CHOKE 10uH			
L004	1-409-529-41	COIL, CHOKE 10uH			
L005	1-414-396-21	INDUCTOR 4.7uH			

Ref. No.	Part No.	Description	Remarks
L006	1-406-824-11	COIL, CHOKE 22uH	
L006	1-424-674-11	COIL, CHOKE 22uH	
L007	1-414-396-21	INDUCTOR 4.7uH	
L008	1-414-396-21	INDUCTOR 4.7uH	
L009	1-406-825-11	COIL, CHOKE 33uH	
L009	1-409-532-41	COIL, CHOKE 33uH	
L010	1-406-823-11	COIL, CHOKE 10uH	
L010	1-409-529-41	COIL, CHOKE 10uH	
L011	1-414-396-21	INDUCTOR 4.7uH	
L012	1-414-396-21	INDUCTOR 4.7uH	
L013	1-414-396-21	INDUCTOR 4.7uH	
L014	1-406-824-11	COIL, CHOKE 22uH	
L014	1-424-674-11	COIL, CHOKE 22uH	
L015	1-414-396-21	INDUCTOR 4.7uH	
L016	1-414-406-11	INDUCTOR 220uH	
L017	1-406-823-11	COIL, CHOKE 10uH	
L017	1-409-529-41	COIL, CHOKE 10uH	
L018	1-414-406-11	INDUCTOR 220uH	
L019	1-414-396-21	INDUCTOR 4.7uH	
L020	1-414-396-21	INDUCTOR 4.7uH	
L021	1-406-824-11	COIL, CHOKE 22uH	
L021	1-424-674-11	COIL, CHOKE 22uH	
L022	1-414-396-21	INDUCTOR 4.7uH	
L023	1-414-396-21	INDUCTOR 4.7uH	
L024	1-414-396-21	INDUCTOR 4.7uH	
L025	1-406-824-11	COIL, CHOKE 22uH	
L025	1-424-674-11	COIL, CHOKE 22uH	
L026	1-406-823-11	COIL, CHOKE 10uH	
L026	1-409-529-41	COIL, CHOKE 10uH	
L027	1-414-396-21	INDUCTOR 4.7uH	
L028	1-414-396-21	INDUCTOR 4.7uH	
L029	1-406-824-11	COIL, CHOKE 22uH	
L029	1-424-674-11	COIL, CHOKE 22uH	
L030	1-414-396-21	INDUCTOR 4.7uH	
L031	1-414-396-21	INDUCTOR 4.7uH	
L032	1-406-825-11	COIL, CHOKE 33uH	
L032	1-409-532-41	COIL, CHOKE 33uH	
L033	1-406-823-11	COIL, CHOKE 10uH	
L033	1-409-529-41	COIL, CHOKE 10uH	
L034	1-406-825-11	COIL, CHOKE 33uH	
L034	1-409-532-41	COIL, CHOKE 33uH	
L035	1-406-823-11	COIL, CHOKE 10uH	
L035	1-409-529-41	COIL, CHOKE 10uH	
L036	1-414-402-11	INDUCTOR 47uH	
L037	1-406-825-11	COIL, CHOKE 33uH	
L037	1-409-532-41	COIL, CHOKE 33uH	
		< IC LINK >	
⚠PS001	1-576-122-21	LINK, IC 400mA	
⚠PS002	1-576-122-21	LINK, IC 400mA	
⚠PS011	1-533-640-21	RINK, IC (SMD) 1400mA	
⚠PS012	1-533-640-21	RINK, IC (SMD) 1400mA	
⚠PS013	1-533-640-21	RINK, IC (SMD) 1400mA	
⚠PS014	1-533-640-21	RINK, IC (SMD) 1400mA	
⚠PS015	1-533-640-21	RINK, IC (SMD) 1400mA	
⚠PS016	1-533-640-21	RINK, IC (SMD) 1400mA	

Note : The components identified by mark ⚠ or dotted line with mark ⚠ are critical for safety. Replace only with part number specified.

Ref. No.	Part No.	Description	Remarks
		< TRANSISTOR >	
Q001	8-729-030-78	TRANSISTOR FP102T-TL	
Q002	8-729-030-75	TRANSISTOR 2SK2316-TD	
Q003	8-729-030-78	TRANSISTOR FP102T-TL	
Q004	8-729-030-75	TRANSISTOR 2SK2316-TD	
Q005	8-729-032-00	TRANSISTOR 2SJ381-TD	
Q006	8-729-030-78	TRANSISTOR FP102T-TL	
Q007	8-729-037-74	TRANSISTOR UN9213J-(TX).SO	
Q008	8-729-030-78	TRANSISTOR FP102T-TL	
Q009	8-729-428-88	TRANSISTOR UN9113	
Q010	8-729-428-88	TRANSISTOR UN9113	
Q011	8-729-023-85	TRANSISTOR 2SJ168	
Q012	8-729-015-47	TRANSISTOR 2SK1062	
Q013	8-729-037-74	TRANSISTOR UN9213J-(TX).SO	
Q014	8-729-025-81	TRANSISTOR 2SA1729-RS-TD	
Q015	8-729-030-78	TRANSISTOR FP102T-TL	
Q016	8-729-030-78	TRANSISTOR FP102T-TL	
Q017	8-729-030-75	TRANSISTOR 2SK2316-TD	
Q018	8-729-030-78	TRANSISTOR FP102T-TL	
Q019	8-729-030-75	TRANSISTOR 2SK2316-TD	
Q020	8-729-030-78	TRANSISTOR FP102T-TL	
Q021	8-729-030-78	TRANSISTOR FP102T-TL	
Q022	8-729-025-81	TRANSISTOR 2SA1729-RS-TD	
Q023	8-729-030-78	TRANSISTOR FP102T-TL	
Q024	8-729-427-23	TRANSISTOR XP4116-TXE	
Q025	8-729-427-23	TRANSISTOR XP4116-TXE	
Q026	8-729-427-45	TRANSISTOR XP4212-TXE	
Q027	8-729-023-32	TRANSISTOR 2SK2037	
Q028	8-729-023-32	TRANSISTOR 2SK2037	
Q029	8-729-427-70	TRANSISTOR XP4401	
Q200	8-729-024-24	TRANSISTOR 2SK2154-TL	
Q201	8-729-024-24	TRANSISTOR 2SK2154-TL	
Q203	8-729-037-74	TRANSISTOR UN9213J-(TX).SO	
Q204	8-729-425-50	TRANSISTOR 2SB1462-Q	
Q205	8-729-425-50	TRANSISTOR 2SB1462-Q	
Q206	8-729-428-88	TRANSISTOR UN9113	
Q207	8-729-037-69	TRANSISTOR UN911EJ-(TX).SO	
Q208	8-729-428-88	TRANSISTOR UN9113	
Q209	8-729-822-05	TRANSISTOR 2SD1622-ST-TD	
Q210	8-729-425-50	TRANSISTOR 2SB1462-Q	
Q211	8-729-425-50	TRANSISTOR 2SB1462-Q	
Q213	8-729-427-46	TRANSISTOR XP4213	
Q214	8-729-425-64	TRANSISTOR 2SD2216J-Q	
Q215	8-729-427-46	TRANSISTOR XP4213	
Q216	8-729-427-46	TRANSISTOR XP4213	
Q217	8-729-427-46	TRANSISTOR XP4213	

Ref. No.	Part No.	Description			Remarks
		< RESISTOR >			
R001	1-216-845-11	METAL CHIP	100K	5%	1/16W
R002	1-216-837-11	METAL CHIP	22K	5%	1/16W
R003	1-216-837-11	METAL CHIP	22K	5%	1/16W
R004	1-216-837-11	METAL CHIP	22K	5%	1/16W
R005	1-216-830-11	METAL CHIP	5.6K	5%	1/16W
R006	1-216-833-11	METAL CHIP	10K	5%	1/16W
R007	1-216-832-11	METAL CHIP	8.2K	5%	1/16W
R008	1-218-859-11	METAL CHIP	3.3K	0.50%	1/16W
R009	1-211-969-11	METAL GLAZE	10	0.50%	1/16W
R010	1-216-845-11	METAL CHIP	100K	5%	1/16W
R011	1-216-837-11	METAL CHIP	22K	5%	1/16W
R012	1-218-875-11	METAL CHIP	15K	0.50%	1/16W
R013	1-216-837-11	METAL CHIP	22K	5%	1/16W
R014	1-218-855-11	METAL CHIP	2.2K	0.50%	1/16W
R015	1-218-875-11	METAL CHIP	15K	0.50%	1/16W
R016	1-218-855-11	METAL CHIP	2.2K	0.50%	1/16W
R017	1-218-877-11	METAL CHIP	18K	0.50%	1/16W
R018	1-218-877-11	METAL CHIP	18K	0.50%	1/16W
R019	1-216-827-11	METAL CHIP	3.3K	5%	1/16W
R020	1-216-829-11	METAL CHIP	4.7K	5%	1/16W
R021	1-218-883-11	METAL CHIP	33K	0.50%	1/16W
R022	1-216-864-11	METAL CHIP	0	5%	1/16W
R023	1-218-869-11	METAL CHIP	8.2K	0.50%	1/16W
R024	1-218-863-11	METAL CHIP	4.7K	0.50%	1/16W
R025	1-218-877-11	METAL CHIP	18K	0.50%	1/16W
R026	1-218-873-11	METAL CHIP	12K	0.50%	1/16W
R027	1-216-833-11	METAL CHIP	10K	5%	1/16W
R028	1-216-837-11	METAL CHIP	22K	5%	1/16W
R029	1-218-879-11	METAL CHIP	22K	0.50%	1/16W
R030	1-216-842-11	METAL CHIP	56K	5%	1/16W
R031	1-216-841-11	METAL CHIP	47K	5%	1/16W
R032	1-216-837-11	METAL CHIP	22K	5%	1/16W
R033	1-216-864-11	METAL CHIP	0	5%	1/16W
R034	1-218-885-11	METAL CHIP	39K	0.50%	1/16W
R035	1-218-897-11	METAL CHIP	120K	0.50%	1/16W
R036	1-218-867-11	METAL CHIP	6.8K	0.50%	1/16W
R037	1-218-861-11	METAL CHIP	3.9K	0.50%	1/16W
R038	1-216-845-11	METAL CHIP	100K	5%	1/16W
R039	1-216-845-11	METAL CHIP	100K	5%	1/16W
R040	1-218-877-11	METAL CHIP	18K	0.50%	1/16W
R041	1-218-879-11	METAL CHIP	22K	0.50%	1/16W
R042	1-216-830-11	METAL CHIP	5.6K	5%	1/16W
R043	1-216-830-11	METAL CHIP	5.6K	5%	1/16W
R044	1-216-837-11	METAL CHIP	22K	5%	1/16W
R045	1-211-960-11	METAL GLAZE	22	0.50%	1/10W
R046	1-218-887-11	METAL CHIP	47K	0.50%	1/16W
R047	1-218-865-11	METAL CHIP	5.6K	0.50%	1/16W
R048	1-218-887-11	METAL CHIP	47K	0.50%	1/16W
R049	1-216-825-11	METAL CHIP	2.2K	5%	1/16W
R050	1-218-879-11	METAL CHIP	22K	0.50%	1/16W
R051	1-218-875-11	METAL CHIP	15K	0.50%	1/16W
R052	1-218-887-11	METAL CHIP	47K	0.50%	1/16W
R053	1-216-833-11	METAL CHIP	10K	5%	1/16W
R054	1-218-875-11	METAL CHIP	15K	0.50%	1/16W
R055	1-218-855-11	METAL CHIP	2.2K	0.50%	1/16W
R056	1-218-831-11	METAL GLAZE	220	0.50%	1/16W
R057	1-218-877-11	METAL CHIP	18K	0.50%	1/16W
R058	1-216-845-11	METAL CHIP	100K	5%	1/16W
R059	1-216-837-11	METAL CHIP	22K	5%	1/16W
R060	1-216-837-11	METAL CHIP	22K	5%	1/16W

Ref. No.	Part No.	Description			Remarks
R061	1-216-832-11	METAL CHIP	8.2K	5%	1/16W
R062	1-218-881-11	METAL CHIP	27K	0.50%	1/16W
R063	1-216-837-11	METAL CHIP	22K	5%	1/16W
R064	1-216-837-11	METAL CHIP	22K	5%	1/16W
R065	1-218-879-11	METAL CHIP	22K	0.50%	1/16W
R066	1-218-871-11	METAL CHIP	10K	0.50%	1/16W
R067	1-216-837-11	METAL CHIP	22K	5%	1/16W
R068	1-218-855-11	METAL CHIP	2.2K	0.50%	1/16W
R069	1-218-875-11	METAL CHIP	15K	0.50%	1/16W
R070	1-216-864-11	METAL CHIP	0	5%	1/16W
R071	1-218-873-11	METAL CHIP	12K	0.50%	1/16W
R072	1-218-877-11	METAL CHIP	18K	0.50%	1/16W
R073	1-218-879-11	METAL CHIP	22K	0.50%	1/16W
R074	1-216-827-11	METAL CHIP	3.3K	5%	1/16W
R075	1-216-830-11	METAL CHIP	5.6K	5%	1/16W
R076	1-218-859-11	METAL CHIP	3.3K	0.50%	1/16W
R077	1-218-883-11	METAL CHIP	33K	0.50%	1/16W
R078	1-216-864-11	METAL CHIP	0	5%	1/16W
R079	1-218-871-11	METAL CHIP	10K	0.50%	1/16W
R080	1-218-883-11	METAL CHIP	33K	0.50%	1/16W
R081	1-218-877-11	METAL CHIP	18K	0.50%	1/16W
R082	1-218-881-11	METAL CHIP	27K	0.50%	1/16W
R083	1-216-833-11	METAL CHIP	10K	5%	1/16W
R084	1-216-833-11	METAL CHIP	10K	5%	1/16W
R085	1-218-883-11	METAL CHIP	33K	0.50%	1/16W
R086	1-218-885-11	METAL CHIP	39K	0.50%	1/16W
R087	1-216-864-11	METAL CHIP	0	5%	1/16W
R088	1-218-879-11	METAL CHIP	22K	0.50%	1/16W
R089	1-216-830-11	METAL CHIP	5.6K	5%	1/16W
R090	1-216-830-11	METAL CHIP	5.6K	5%	1/16W
R091	1-218-879-11	METAL CHIP	22K	0.50%	1/16W
R092	1-216-841-11	METAL CHIP	47K	5%	1/16W
R093	1-218-865-11	METAL CHIP	5.6K	0.50%	1/16W
R094	1-218-887-11	METAL CHIP	47K	0.50%	1/16W
R095	1-216-827-11	METAL CHIP	3.3K	5%	1/16W
R096	1-218-877-11	METAL CHIP	18K	0.50%	1/16W
R097	1-218-887-11	METAL CHIP	47K	0.50%	1/16W
R098	1-218-875-11	METAL CHIP	15K	0.50%	1/16W
R099	1-218-855-11	METAL CHIP	2.2K	0.50%	1/16W
R100	1-218-857-11	METAL CHIP	2.7K	0.50%	1/16W
R101	1-218-877-11	METAL CHIP	18K	0.50%	1/16W
R102	1-216-825-11	METAL CHIP	2.2K	5%	1/16W
R103	1-216-864-11	METAL CHIP	0	5%	1/16W
R105	1-216-841-11	METAL CHIP	47K	5%	1/16W
R106	1-216-840-11	METAL CHIP	39K	5%	1/16W
R200	1-216-845-11	METAL CHIP	100K	5%	1/16W
R201	1-216-845-11	METAL CHIP	100K	5%	1/16W
R202	1-216-821-11	METAL CHIP	1K	5%	1/16W
R204	1-216-841-11	METAL CHIP	47K	5%	1/16W
R205	1-216-833-11	METAL CHIP	10K	5%	1/16W
R206	1-216-842-11	METAL CHIP	56K	5%	1/16W
R207	1-216-848-11	METAL CHIP	180K	5%	1/16W
R208	1-216-841-11	METAL CHIP	47K	5%	1/16W
R209	1-216-841-11	METAL CHIP	47K	5%	1/16W
R210	1-216-845-11	METAL CHIP	100K	5%	1/16W

Ref. No.	Part No.	Description			Remarks
R211	1-216-853-11	METAL CHIP	470K	5%	1/16W
R212	1-216-845-11	METAL CHIP	100K	5%	1/16W
R213	1-216-857-11	METAL CHIP	1M	5%	1/16W
R214	1-216-837-11	METAL CHIP	22K	5%	1/16W
R215	1-216-845-11	METAL CHIP	100K	5%	1/16W
R216	1-216-833-11	METAL CHIP	10K	5%	1/16W
R217	1-218-863-11	METAL CHIP	4.7K	0.50%	1/16W
R218	1-216-837-11	METAL CHIP	22K	5%	1/16W
R219	1-216-841-11	METAL CHIP	47K	5%	1/16W
R220	1-216-837-11	METAL CHIP	22K	5%	1/16W
R221	1-216-841-11	METAL CHIP	47K	5%	1/16W
R222	1-218-889-11	METAL CHIP	56K	0.50%	1/16W
R223	1-216-841-11	METAL CHIP	47K	5%	1/16W
R224	1-218-863-11	METAL CHIP	4.7K	0.50%	1/16W
R225	1-216-864-11	METAL CHIP	0	5%	1/16W
R226	1-218-891-11	METAL CHIP	68K	0.50%	1/16W
R227	1-216-841-11	METAL CHIP	47K	5%	1/16W
R228	1-216-799-11	METAL CHIP	15	5%	1/16W
R230	1-216-839-11	METAL CHIP	33K	5%	1/16W
R231	1-211-987-11	METAL GLAZE	56	0.50%	1/16W
R232	1-218-879-11	METAL CHIP	22K	0.50%	1/16W
R233	1-218-831-11	METAL GLAZE	220	0.50%	1/16W
R236	1-216-809-11	METAL CHIP	100	5%	1/16W

< TRANSFORMER >

T001	1-427-916-21	TRANSFORMER, CONVERTER	
T002	1-427-917-21	TRANSFORMER, CONVERTER	

	A-7072-893-A	DS-74 BOARD, COMPLETE		
		**********		
		(Ref.No.4,000 Series)		
		< CAPACITOR >		
C151	1-164-346-11	CERAMIC CHIP	1uF	16V
C152	1-164-346-11	CERAMIC CHIP	1uF	16V
		< CONNECTOR >		
* CN151	1-580-756-21	PIN, CONNECTOR 7P		
* CN152	1-580-056-21	PIN, CONNECTOR (SMD) 3P		
		< DIODE >		
D151	8-719-420-14	DIODE MA8082-M		
D152	8-719-422-97	DIODE MA8091-M		
		< JACK >		
J151	1-770-497-11	CONNECTOR, DC-IN (DC IN)		
		< IC LINK >		
⚠PS151	1-533-640-21	RINK, IC (SMD) 1400mA		

Note : The components identified by mark ⚠ or dotted line with mark ⚠ are critical for safety. Replace only with part number specified.

Ref. No.	Part No.	Description			Remarks
		< RESISTOR >			
R151	1-216-821-11	METAL CHIP	1K	5%	1/16W
R152	1-216-821-11	METAL CHIP	1K	5%	1/16W
	A-7072-894-A	DV-27 BOARD, COMPLETE			
		**********			
		(Ref.No.1,000 Series)			
		< CONNECTOR >			
CN250	1-580-789-21	PIN, CONNECTOR (SMD) 6P			
CN251	1-770-496-11	CONNECTOR, SQUARE TYPE 4P (DV OUT)			
	A-7072-972-A	ED-44 BOARD, COMPLETE			
		**********			
		(Ref.No.4,000 Series)			
		< CONNECTOR >			
* CN101	1-580-056-21	PIN, CONNECTOR 3P			
CN102	1-691-484-11	CONNECTOR, FFC/FPC 5P			
		< DIODE >			
D101	8-719-420-14	DIODE MA8082-M			
		< RESISTOR >			
R101	1-216-832-11	METAL CHIP	8.2K	5%	1/16W
R102	1-216-828-11	METAL CHIP	3.9K	5%	1/16W
R103	1-216-826-11	METAL CHIP	2.7K	5%	1/16W
R104	1-216-832-11	METAL CHIP	8.2K	5%	1/16W
R105	1-216-838-11	METAL CHIP	27K	5%	1/16W
		< SWITCH >			
S100	1-692-247-11	SWITCH, TACTIL (2 CLICK) (EDIT SEARCH)			
S101	1-692-247-11	SWITCH, TACTIL (2 CLICK) (EDIT SEARCH)			
	A-7072-974-A	EJ-27 BOARD, COMPLETE			
		**********			
		(Ref.No.4,000 Series)			
		< CONNECTOR >			
* CN910	1-580-056-21	PIN, CONNECTOR 3P			
		< DIODE >			
D910	8-719-420-14	DIODE MA8082-M			
D911	8-719-420-14	DIODE MA8082-M			
		< SWITCH >			
S910	1-692-088-11	SWITCH, TACTILE (EJECT)			
S911	1-572-467-21	SWITCH, PUSH (1 KEY) (BATTERY)			

Ref. No.	Part No.	Description			Remarks
	A-7072-890-A	EM-10 BOARD, COMPLETE			
		**********			
		(Ref.No.2,000 Series)			
		< CAPACITOR >			
C601	1-164-315-11	CERAMIC CHIP	470PF	5%	50V
		< CONNECTOR >			
CN601	1-691-491-21	CONNECTOR, FFC/FPC 12P			
CN602	1-691-487-21	CONNECTOR, FFC/FPC 8P			
		< DIODE >			
D601	8-719-404-49	DIODE MA111			
D602	8-719-422-70	DIODE MA8075			
D603	8-719-422-70	DIODE MA8075			
D604	8-719-422-70	DIODE MA8075			
D605	8-719-422-70	DIODE MA8075			
		< FERRITE BEAD >			
FB601	1-543-960-21	BEAD, FERRITE (CHIP)			
		< JACK >			
J601	1-569-810-21	JACK (SMALL TYPE) (MIC PLUG IN POWER)			
		< COIL >			
L601	1-412-939-11	INDUCTOR 1uH			
L602	1-412-939-11	INDUCTOR 1uH			
L603	1-412-939-11	INDUCTOR 1uH			
L604	1-412-939-11	INDUCTOR 1uH			
	A-7072-971-A	FK-68 BOARD, COMPLETE			
		**********			
		(Ref.No.4,000 Series)			
		< CONNECTOR >			
CN402	1-573-768-21	PIN, CONNECTOR (1.5MM) (SMD) 5P			
* CN403	1-764-177-11	PIN, CONNECTOR (SMD) (1.5MM) 7P			
CN404	1-691-550-11	PIN, CONNECTOR (1.5MM) (SMD) 3P			
* CN405	1-695-320-21	PIN, CONNECTOR (1.5MM) (SMD) 2P			
CN406	1-770-542-21	CONNECTOR, FFC/FPC 40P			
CN407	1-778-637-21	CONNECTOR, FFC/FPC (ZIF) 50P			
* CN408	1-770-572-21	CONNECTOR, BOARD TO BOARD 30P			
CN410	1-750-358-21	CONNECTOR, FFC/FPC (ZIF) 30P			
		< DIODE >			
D401	8-719-989-53	DIODE CL-200HR-C-TSL (PEAK)			
D402	8-719-989-53	DIODE CL-200HR-C-TSL (PEAK)			
D406	8-719-059-99	DIODE CL-220TY-C-TS			
D407	8-719-059-99	DIODE CL-220TY-C-TS			
D408	8-719-059-99	DIODE CL-220TY-C-TS			
D409	8-719-059-99	DIODE CL-220TY-C-TS			
D410	8-719-059-99	DIODE CL-220TY-C-TS			
D411	8-719-059-99	DIODE CL-220TY-C-TS			
D412	8-719-059-99	DIODE CL-220TY-C-TS			
D413	8-719-059-99	DIODE CL-220TY-C-TS			

Ref. No.	Part No.	Description			Remarks
D414	8-719-059-99	DIODE CL-220TY-C-TS			
D415	8-719-059-99	DIODE CL-220TY-C-TS			
D416	8-719-420-14	DIODE MA8082-M			
D417	8-719-420-14	DIODE MA8082-M			
D418	8-719-420-14	DIODE MA8082-M			
D419	8-719-420-14	DIODE MA8082-M			
D420	8-719-420-14	DIODE MA8082-M			
D421	8-719-420-14	DIODE MA8082-M			
D422	8-719-420-14	DIODE MA8082-M			
D423	8-719-420-14	DIODE MA8082-M			
D424	8-719-420-14	DIODE MA8082-M			
D425	8-719-420-14	DIODE MA8082-M			
D426	8-719-420-14	DIODE MA8082-M			
D427	8-719-420-14	DIODE MA8082-M			
D428	8-719-420-14	DIODE MA8082-M			
D429	8-719-420-14	DIODE MA8082-M			
		< RESISTOR >			
R401	1-216-826-11	METAL CHIP	2.7K	5%	1/16W
R402	1-216-828-11	METAL CHIP	3.9K	5%	1/16W
R403	1-216-832-11	METAL CHIP	8.2K	5%	1/16W
R405	1-216-815-11	METAL CHIP	330	5%	1/16W
R406	1-216-815-11	METAL CHIP	330	5%	1/16W
R407	1-216-826-11	METAL CHIP	2.7K	5%	1/16W
R408	1-216-828-11	METAL CHIP	3.9K	5%	1/16W
R410	1-216-826-11	METAL CHIP	2.7K	5%	1/16W
R411	1-216-828-11	METAL CHIP	3.9K	5%	1/16W
R412	1-216-832-11	METAL CHIP	8.2K	5%	1/16W
R413	1-216-838-11	METAL CHIP	27K	5%	1/16W
R415	1-216-826-11	METAL CHIP	2.7K	5%	1/16W
R416	1-216-828-11	METAL CHIP	3.9K	5%	1/16W
R417	1-216-832-11	METAL CHIP	8.2K	5%	1/16W
R418	1-216-838-11	METAL CHIP	27K	5%	1/16W
R430	1-216-821-11	METAL CHIP	1K	5%	1/16W
R431	1-216-821-11	METAL CHIP	1K	5%	1/16W
R434	1-216-826-11	METAL CHIP	2.7K	5%	1/16W
R435	1-216-828-11	METAL CHIP	3.9K	5%	1/16W
R436	1-216-864-11	METAL CHIP	0	5%	1/16W
		< SWITCH >			
S401	1-762-650-21	SWITCH, SLIDE (REC MODE)			
S402	1-762-650-21	SWITCH, SLIDE (SPEAKER)			
S404	1-570-858-11	SWITCH, SLIDE (STEADY SHOT)			
S406	1-762-650-21	SWITCH, SLIDE (REC LEVEL L)			
S407	1-762-650-21	SWITCH, SLIDE (REC LEVEL R)			
S408	1-570-858-11	SWITCH, SLIDE (LIGHT)			
S410	1-692-024-21	SWITCH, ROTARY (WHT BAL)			
S411	1-692-024-21	SWITCH, ROTARY (SHUTTER SPEED)			
S412	1-692-024-21	SWITCH, ROTARY (GAIN)			
S414	1-571-787-31	SWITCH, TACTILE (ZERO SET MEMORY)			
S415	1-762-648-21	SWITCH, SLIDE (MONITOR)			
S417	1-570-858-11	SWITCH, SLIDE (DIGITAL MODE)			

Ref. No.	Part No.	Description			Remarks
	A-7072-902-A	FS-78 BOARD, COMPLETE			
		**********			
		(Ref.No.5,000 Series)			
		< CONNECTOR >			
CN601	1-569-775-21	PIN, CONNECTOR 5P			
		< DIODE >			
D601	8-719-420-14	DIODE MA8082-M			
D602	8-719-420-14	DIODE MA8082-M			
		< RESISTOR >			
R601	1-216-059-00	METAL CHIP	2.7K	5%	1/10W
R602	1-216-828-11	METAL CHIP	3.9K	5%	1/16W
		< SWITCH >			
S601	1-692-682-11	SWITCH, TACTILE (RUBBER)(WHITE BALANCE)			
S602	1-692-682-11	SWITCH, TACTILE (RUBBER)(FADER/OVERLAP)			
S603	1-692-682-11	SWITCH, TACTILE (RUBBER)(START/STOP)			
S604	1-571-787-31	SWITCH, TACTILE (CP CHECK)			
	A-7072-891-A	GP-14 BOARD, COMPLETE			
		**********			
		(Ref.No.5,000 Series)			
		< CONNECTOR >			
CN701	1-691-492-21	CONNECTOR, FFC/FPC 13P			
CN702	1-691-489-11	CONNECTOR, FFC/FPC 10P			
* CN703	1-691-550-11	PIN, CONNECTOR 3P			
		< DIODE >			
D702	8-719-420-14	DIODE MA8082-M			
		< SPEAKER >			
SP701	1-529-107-11	BUZZER, PIEZOELECTRIC			
	A-7072-976-A	HR-11 BOARD, COMPLETE			
		**********			
		(Ref.No.4,000 Series)			
		< CAPACITOR >			
C711	1-163-038-91	CERAMIC CHIP	0.1uF		25V
		< CONNECTOR >			
* CN711	1-580-056-21	PIN, CONNECTOR 3P			
		< IC >			
IC711	8-749-923-29	IC RS-20E-T			

Ref. No.	Part No.	Description			Remarks
	A-7066-868-A	JC-15P BOARD, COMPLETE			
		**********			
		(Ref.No.1,000 Series)			
		< CAPACITOR >			
C400	1-110-569-11	TANTAL. CHIP	47uF	20%	6.3V
C401	1-110-569-11	TANTAL. CHIP	47uF	20%	6.3V
C402	1-164-156-11	CERAMIC CHIP	0.1uF		25V
C403	1-110-569-11	TANTAL. CHIP	47uF	20%	6.3V
C404	1-164-156-11	CERAMIC CHIP	0.1uF		25V
C405	1-164-156-11	CERAMIC CHIP	0.1uF		25V
C406	1-164-156-11	CERAMIC CHIP	0.1uF		25V
C407	1-164-156-11	CERAMIC CHIP	0.1uF		25V
C408	1-164-156-11	CERAMIC CHIP	0.1uF		25V
C409	1-164-156-11	CERAMIC CHIP	0.1uF		25V
C411	1-104-753-11	TANTAL. CHIP	47uF	20%	6.3V
C412	1-164-156-11	CERAMIC CHIP	0.1uF		25V
C413	1-164-156-11	CERAMIC CHIP	0.1uF		25V
C414	1-164-156-11	CERAMIC CHIP	0.1uF		25V
C415	1-164-156-11	CERAMIC CHIP	0.1uF		25V
C416	1-164-156-11	CERAMIC CHIP	0.1uF		25V
C417	1-164-156-11	CERAMIC CHIP	0.1uF		25V
C418	1-164-156-11	CERAMIC CHIP	0.1uF		25V
C419	1-164-156-11	CERAMIC CHIP	0.1uF		25V
C420	1-164-156-11	CERAMIC CHIP	0.1uF		25V
C421	1-164-156-11	CERAMIC CHIP	0.1uF		25V
C422	1-164-156-11	CERAMIC CHIP	0.1uF		25V
C423	1-164-156-11	CERAMIC CHIP	0.1uF		25V
C428	1-164-156-11	CERAMIC CHIP	0.1uF		25V
C429	1-110-569-11	TANTAL. CHIP	47uF	20%	6.3V
C430	1-164-156-11	CERAMIC CHIP	0.1uF		25V
C431	1-164-156-11	CERAMIC CHIP	0.1uF		25V
C436	1-162-909-11	CERAMIC CHIP	4PF	0.25PF	50V
C437	1-162-909-11	CERAMIC CHIP	4PF	0.25PF	50V
C439	1-162-964-11	CERAMIC CHIP	0.001uF	10%	50V
C440	1-162-964-11	CERAMIC CHIP	0.001uF	10%	50V
C441	1-164-156-11	CERAMIC CHIP	0.1uF		25V
C442	1-162-964-11	CERAMIC CHIP	0.001uF	10%	50V
C443	1-135-149-21	TANTALUM CHIP	2.2uF	20%	10V
C444	1-165-176-11	CERAMIC CHIP	0.047uF	10%	16V
C445	1-164-156-11	CERAMIC CHIP	0.1uF		25V
C447	1-162-915-11	CERAMIC CHIP	10PF	0.5PF	50V
C448	1-162-915-11	CERAMIC CHIP	10PF	0.5PF	50V
C449	1-162-964-11	CERAMIC CHIP	0.001uF	10%	50V
C450	1-135-149-21	TANTALUM CHIP	2.2uF	20%	10V
C451	1-165-176-11	CERAMIC CHIP	0.047uF	10%	16V
C452	1-162-964-11	CERAMIC CHIP	0.001uF	10%	50V
C453	1-162-964-11	CERAMIC CHIP	0.001uF	10%	50V
C455	1-164-156-11	CERAMIC CHIP	0.1uF		25V
C456	1-164-156-11	CERAMIC CHIP	0.1uF		25V
C457	1-164-156-11	CERAMIC CHIP	0.1uF		25V
C458	1-164-156-11	CERAMIC CHIP	0.1uF		25V
C469	1-110-569-11	TANTAL. CHIP	47uF	20%	6.3V
C471	1-164-156-11	CERAMIC CHIP	0.1uF		25V
C476	1-110-569-11	TANTAL. CHIP	47uF	20%	6.3V

Ref. No.	Part No.	Description			Remarks
C478	1-164-156-11	CERAMIC CHIP	0.1uF		25V
C479	1-135-157-21	TANTALUM CHIP	10uF	20%	6.3V
C480	1-135-157-21	TANTALUM CHIP	10uF	20%	6.3V
C481	1-110-569-11	TANTAL. CHIP	47uF	20%	6.3V
C482	1-162-966-11	CERAMIC CHIP	0.0022uF	10%	50V
C483	1-162-915-11	CERAMIC CHIP	10PF	0.5PF	50V
C500	1-164-156-11	CERAMIC CHIP	0.1uF		25V
C501	1-164-156-11	CERAMIC CHIP	0.1uF		25V
C502	1-113-994-11	TANTAL. CHIP	6.8uF	20%	16V
C504	1-135-259-11	TANTAL. CHIP	10uF	20%	6.3V
C505	1-135-259-11	TANTAL. CHIP	10uF	20%	6.3V
C509	1-135-259-11	TANTAL. CHIP	10uF	20%	6.3V
C510	1-164-156-11	CERAMIC CHIP	0.1uF		25V
C511	1-164-156-11	CERAMIC CHIP	0.1uF		25V
C512	1-162-966-11	CERAMIC CHIP	0.0022uF	10%	50V
C517	1-162-918-11	CERAMIC CHIP	18PF	5%	50V
C518	1-162-919-11	CERAMIC CHIP	22PF	5%	50V
C520	1-165-176-11	CERAMIC CHIP	0.047uF	10%	16V
C521	1-165-176-11	CERAMIC CHIP	0.047uF	10%	16V
C522	1-165-176-11	CERAMIC CHIP	0.047uF	10%	16V
C523	1-165-176-11	CERAMIC CHIP	0.047uF	10%	16V
C524	1-165-176-11	CERAMIC CHIP	0.047uF	10%	16V
C525	1-165-176-11	CERAMIC CHIP	0.047uF	10%	16V
C526	1-165-176-11	CERAMIC CHIP	0.047uF	10%	16V
C527	1-165-176-11	CERAMIC CHIP	0.047uF	10%	16V
C528	1-165-176-11	CERAMIC CHIP	0.047uF	10%	16V
C529	1-165-176-11	CERAMIC CHIP	0.047uF	10%	16V
C530	1-164-156-11	CERAMIC CHIP	0.1uF		25V
C532	1-164-156-11	CERAMIC CHIP	0.1uF		25V
C534	1-164-156-11	CERAMIC CHIP	0.1uF		25V
C536	1-135-259-11	TANTAL. CHIP	10uF	20%	6.3V
C537	1-164-156-11	CERAMIC CHIP	0.1uF		25V
C538	1-164-156-11	CERAMIC CHIP	0.1uF		25V
C539	1-162-966-11	CERAMIC CHIP	0.0022uF	10%	50V
C545	1-164-156-11	CERAMIC CHIP	0.1uF		25V
C547	1-164-156-11	CERAMIC CHIP	0.1uF		25V
C556	1-164-156-11	CERAMIC CHIP	0.1uF		25V
C557	1-164-156-11	CERAMIC CHIP	0.1uF		25V
C641	1-164-156-11	CERAMIC CHIP	0.1uF		25V
C642	1-164-156-11	CERAMIC CHIP	0.1uF		25V
C643	1-135-259-11	TANTAL. CHIP	10uF	20%	6.3V
C644	1-164-156-11	CERAMIC CHIP	0.1uF		25V
C645	1-164-156-11	CERAMIC CHIP	0.1uF		25V
C646	1-164-156-11	CERAMIC CHIP	0.1uF		25V
C647	1-164-156-11	CERAMIC CHIP	0.1uF		25V
C648	1-164-156-11	CERAMIC CHIP	0.1uF		25V
C649	1-162-914-11	CERAMIC CHIP	9PF	0.5PF	50V
C650	1-164-156-11	CERAMIC CHIP	0.1uF		25V
C651	1-162-914-11	CERAMIC CHIP	9PF	0.5PF	50V
C652	1-164-156-11	CERAMIC CHIP	0.1uF		25V
C653	1-110-569-11	TANTAL. CHIP	47uF	20%	6.3V
C654	1-164-156-11	CERAMIC CHIP	0.1uF		25V
C655	1-164-156-11	CERAMIC CHIP	0.1uF		25V
C656	1-164-156-11	CERAMIC CHIP	0.1uF		25V
C657	1-164-156-11	CERAMIC CHIP	0.1uF		25V

Ref. No.	Part No.	Description			Remarks
C658	1-164-156-11	CERAMIC CHIP	0.1uF		25V
C659	1-135-157-21	TANTALUM CHIP	10uF	20%	6.3V
C662	1-110-569-11	TANTAL. CHIP	47uF	20%	6.3V
C663	1-164-156-11	CERAMIC CHIP	0.1uF		25V
C664	1-162-964-11	CERAMIC CHIP	0.001uF	10%	50V
C665	1-162-964-11	CERAMIC CHIP	0.001uF	10%	50V
C667	1-164-156-11	CERAMIC CHIP	0.1uF		25V
C668	1-104-851-11	TANTAL. CHIP	10uF	20%	10V
C669	1-164-156-11	CERAMIC CHIP	0.1uF		25V
C670	1-107-682-11	CERAMIC CHIP	1uF	10%	16V
C671	1-164-156-11	CERAMIC CHIP	0.1uF		25V
C672	1-162-927-11	CERAMIC CHIP	100PF	5%	50V
C673	1-162-964-11	CERAMIC CHIP	0.001uF	10%	50V
C674	1-164-156-11	CERAMIC CHIP	0.1uF		25V
C675	1-135-157-21	TANTALUM CHIP	10uF	20%	6.3V
C676	1-164-156-11	CERAMIC CHIP	0.1uF		25V
C677	1-164-156-11	CERAMIC CHIP	0.1uF		25V
C678	1-164-156-11	CERAMIC CHIP	0.1uF		25V
C679	1-164-156-11	CERAMIC CHIP	0.1uF		25V
C702	1-164-156-11	CERAMIC CHIP	0.1uF		25V
C705	1-164-156-11	CERAMIC CHIP	0.1uF		25V
C706	1-110-569-11	TANTAL. CHIP	47uF	20%	6.3V
C709	1-110-569-11	TANTAL. CHIP	47uF	20%	6.3V
C710	1-164-156-11	CERAMIC CHIP	0.1uF		25V
C711	1-164-156-11	CERAMIC CHIP	0.1uF		25V
C712	1-164-156-11	CERAMIC CHIP	0.1uF		25V
C713	1-164-156-11	CERAMIC CHIP	0.1uF		25V
C716	1-110-569-11	TANTAL. CHIP	47uF	20%	6.3V
C717	1-164-156-11	CERAMIC CHIP	0.1uF		25V
C718	1-164-156-11	CERAMIC CHIP	0.1uF		25V
C719	1-110-569-11	TANTAL. CHIP	47uF	20%	6.3V
C720	1-164-156-11	CERAMIC CHIP	0.1uF		25V
C721	1-164-156-11	CERAMIC CHIP	0.1uF		25V
C723	1-164-156-11	CERAMIC CHIP	0.1uF		25V
C724	1-110-569-11	TANTAL. CHIP	47uF	20%	6.3V
C725	1-164-156-11	CERAMIC CHIP	0.1uF		25V
C727	1-162-919-11	CERAMIC CHIP	22PF	5%	50V
C728	1-162-919-11	CERAMIC CHIP	22PF	5%	50V
C729	1-109-982-11	CERAMIC CHIP	1uF	10%	10V
C730	1-162-960-11	CERAMIC CHIP	220PF	10%	50V
		< CONNECTOR >			
* CN401	1-770-454-21	CONNECTOR, BOARD TO BOARD 70P			
* CN403	1-770-454-21	CONNECTOR, BOARD TO BOARD 70P			
CN500	1-691-494-21	CONNECTOR, FFC/FPC 15P			
CN501	1-573-368-11	CONNECTOR, FFC/FPC 28P			
CN502	1-770-543-21	CONNECTOR, FFC/FPC 40P			
CN505	1-750-358-21	CONNECTOR, FFC/FPC (ZIF) 30P			
* CN506	1-770-572-21	CONNECTOR, BOARD TO BOARD 30P			
* CN641	1-770-454-21	CONNECTOR, BOARD TO BOARD 70P			
CN643	1-691-494-21	CONNECTOR, FFC/FPC 15P			
CN700	1-580-789-21	PIN, CONNECTOR (SMD) 6P			

Ref. No.	Part No.	Description	Remarks
		< DIODE >	
D401	8-719-055-86	DIODE KV1470TL1-3	
D402	8-719-055-86	DIODE KV1470TL1-3	
D403	8-719-027-95	DIODE HSM88WK	
D404	8-719-027-95	DIODE HSM88WK	
D500	8-719-159-96	DIODE RD5.1UM-T1B	
D501	8-719-159-96	DIODE RD5.1UM-T1B	
D502	8-719-040-57	DIODE 015Z8.2-XY-TPH3	
D507	8-719-421-27	DIODE MA728	
D508	8-719-046-91	DIODE MA2S111	
D511	8-719-420-51	DIODE MA729	
D512	8-719-420-51	DIODE MA729	
D513	8-719-421-67	DIODE MA132WK	
D641	8-719-055-86	DIODE KV1470TL1-3	
D653	8-719-040-57	DIODE 015Z8.2-XY-TPH3	
D654	8-719-046-91	DIODE MA2S111	
		< FERRITE BEAD >	
FB653	1-543-956-21	BEAD, FERRITE (CHIP)	
		< IC >	
IC401	8-759-327-31	IC CXD2183R	
IC402	8-759-327-05	IC CXD2184R	
IC403	8-759-426-26	IC CXD8608R	
IC404	8-752-375-34	IC CXK48V818R-T6	
IC405	8-752-375-34	IC CXK48V818R-T6	
IC406	8-759-328-28	IC ZA4024	
IC409	8-752-865-90	IC CXP911016-008R	
IC410	8-752-375-05	IC CXD2191R	
IC411	8-759-337-30	IC uPD482445LGW-B10-E2	
IC412	8-759-385-90	IC CXD2187AR	
IC500	8-759-298-10	IC S-8423NFS-T2	
IC501	8-759-447-80	IC MB89098RPFV-G-18-BND	
IC502	8-759-327-60	IC TC7W125FU-TE12R	
IC503	8-759-327-60	IC TC7W125FU-TE12R	
IC504	8-759-428-95	IC HD6433837TB22X	
IC505	8-759-327-65	IC CXD8525N-E2	
IC641	8-759-271-86	IC TC7SH04FU	
IC642	8-759-271-86	IC TC7SH04FU	
IC643	8-759-327-04	IC CXD2913Q	
IC644	8-752-374-96	IC CXD2190R	
IC645	8-759-327-01	IC NJM062V(TE2)	
IC646	8-759-337-74	IC HM62V256LT8Z	
IC700	8-759-433-15	IC HD6433837TB13X	
IC701	8-759-430-56	IC CXD2194AR-TEB	
IC702	8-759-432-00	IC TSB11LV01PT-TEB	
		< COIL >	
L401	1-414-398-11	INDUCTOR 10uH	
L402	1-410-740-31	INDUCTOR CHIP 0.82uH	
L403	1-410-378-11	INDUCTOR CHIP 5.6uH	
L405	1-414-398-11	INDUCTOR 10uH	
L406	1-414-398-11	INDUCTOR 10uH	

Ref. No.	Part No.	Description	Remarks
L407	1-414-398-11	INDUCTOR 10uH	
L409	1-414-402-11	INDUCTOR 47uH	
L410	1-414-398-11	INDUCTOR 10uH	
L411	1-414-398-11	INDUCTOR 10uH	
L500	1-414-398-11	INDUCTOR 10uH	
L501	1-414-392-21	INDUCTOR 1uH	
L502	1-414-392-21	INDUCTOR 1uH	
L503	1-414-392-21	INDUCTOR 1uH	
L504	1-414-392-21	INDUCTOR 1uH	
L505	1-414-392-21	INDUCTOR 1uH	
L506	1-414-398-11	INDUCTOR 10uH	
L507	1-414-398-11	INDUCTOR 10uH	
L508	1-414-398-11	INDUCTOR 10uH	
L509	1-414-398-11	INDUCTOR 10uH	
L510	1-414-392-21	INDUCTOR 1uH	
L511	1-414-392-21	INDUCTOR 1uH	
L512	1-414-392-21	INDUCTOR 1uH	
L513	1-414-392-21	INDUCTOR 1uH	
L514	1-414-392-21	INDUCTOR 1uH	
L516	1-414-392-21	INDUCTOR 1uH	
L518	1-414-392-21	INDUCTOR 1uH	
L519	1-414-392-21	INDUCTOR 1uH	
L520	1-414-392-21	INDUCTOR 1uH	
L521	1-412-951-11	INDUCTOR 10uH	
L641	1-414-398-11	INDUCTOR 10uH	
L642	1-414-398-11	INDUCTOR 10uH	
L643	1-414-398-11	INDUCTOR 10uH	
L644	1-411-273-21	COIL, VARIABLE	
L645	1-414-398-11	INDUCTOR 10uH	
L646	1-414-398-11	INDUCTOR 10uH	
L700	1-414-398-11	INDUCTOR 10uH	
L701	1-414-398-11	INDUCTOR 10uH	
L702	1-414-398-11	INDUCTOR 10uH	
L703	1-414-398-11	INDUCTOR 10uH	
L704	1-414-398-11	INDUCTOR 10uH	
		< TRANSISTOR >	
Q500	8-729-427-74	TRANSISTOR XP4601	
Q501	8-729-429-18	TRANSISTOR UN9213	
Q504	8-729-822-05	TRANSISTOR 2SD1622-ST-TD	
Q505	8-729-425-50	TRANSISTOR 2SB1462-Q	
Q506	8-729-428-88	TRANSISTOR UN9113	
Q507	8-729-428-88	TRANSISTOR UN9113	
Q508	8-729-427-70	TRANSISTOR XP4401	
Q509	8-729-106-60	TRANSISTOR 2SB1115A	
Q641	8-729-427-70	TRANSISTOR XP4401	
		< RESISTOR >	
R402	1-216-821-11	METAL CHIP 1K 5%	1/16W
R410	1-216-821-11	METAL CHIP 1K 5%	1/16W
R411	1-216-821-11	METAL CHIP 1K 5%	1/16W
R412	1-216-821-11	METAL CHIP 1K 5%	1/16W
R413	1-216-821-11	METAL CHIP 1K 5%	1/16W

Ref. No.	Part No.	Description			Remarks
R414	1-216-821-11	METAL CHIP	1K	5%	1/16W
R419	1-216-821-11	METAL CHIP	1K	5%	1/16W
R420	1-216-821-11	METAL CHIP	1K	5%	1/16W
R421	1-216-821-11	METAL CHIP	1K	5%	1/16W
R422	1-216-821-11	METAL CHIP	1K	5%	1/16W
R423	1-216-821-11	METAL CHIP	1K	5%	1/16W
R424	1-216-821-11	METAL CHIP	1K	5%	1/16W
R426	1-216-805-11	METAL CHIP	47	5%	1/16W
R427	1-216-805-11	METAL CHIP	47	5%	1/16W
R428	1-216-833-11	METAL CHIP	10K	5%	1/16W
R429	1-216-833-11	METAL CHIP	10K	5%	1/16W
R430	1-216-817-11	METAL CHIP	470	5%	1/16W
R431	1-216-833-11	METAL CHIP	10K	5%	1/16W
R432	1-216-829-11	METAL CHIP	4.7K	5%	1/16W
R433	1-216-805-11	METAL CHIP	47	5%	1/16W
R434	1-216-833-11	METAL CHIP	10K	5%	1/16W
R435	1-216-833-11	METAL CHIP	10K	5%	1/16W
R436	1-216-857-11	METAL CHIP	1M	5%	1/16W
R437	1-216-815-11	METAL CHIP	330	5%	1/16W
R438	1-216-833-11	METAL CHIP	10K	5%	1/16W
R439	1-216-829-11	METAL CHIP	4.7K	5%	1/16W
R440	1-216-833-11	METAL CHIP	10K	5%	1/16W
R441	1-216-805-11	METAL CHIP	47	5%	1/16W
R442	1-216-821-11	METAL CHIP	1K	5%	1/16W
R443	1-216-821-11	METAL CHIP	1K	5%	1/16W
R449	1-216-833-11	METAL CHIP	10K	5%	1/16W
R450	1-216-833-11	METAL CHIP	10K	5%	1/16W
R451	1-216-833-11	METAL CHIP	10K	5%	1/16W
R453	1-216-864-11	METAL CHIP	0	5%	1/16W
R454	1-216-845-11	METAL CHIP	100K	5%	1/16W
R455	1-216-821-11	METAL CHIP	1K	5%	1/16W
R456	1-216-833-11	METAL CHIP	10K	5%	1/16W
R457	1-216-864-11	METAL CHIP	0	5%	1/16W
R458	1-216-864-11	METAL CHIP	0	5%	1/16W
R459	1-216-864-11	METAL CHIP	0	5%	1/16W
R460	1-216-864-11	METAL CHIP	0	5%	1/16W
R461	1-216-833-11	METAL CHIP	10K	5%	1/16W
R462	1-216-833-11	METAL CHIP	10K	5%	1/16W
R463	1-216-833-11	METAL CHIP	10K	5%	1/16W
R464	1-216-833-11	METAL CHIP	10K	5%	1/16W
R466	1-216-864-11	METAL CHIP	0	5%	1/16W
R467	1-216-805-11	METAL CHIP	47	5%	1/16W
R468	1-216-821-11	METAL CHIP	1K	5%	1/16W
R469	1-216-821-11	METAL CHIP	1K	5%	1/16W
R470	1-216-821-11	METAL CHIP	1K	5%	1/16W
R471	1-216-821-11	METAL CHIP	1K	5%	1/16W
R472	1-216-821-11	METAL CHIP	1K	5%	1/16W
R473	1-216-821-11	METAL CHIP	1K	5%	1/16W
R474	1-216-821-11	METAL CHIP	1K	5%	1/16W
R475	1-216-821-11	METAL CHIP	1K	5%	1/16W
R476	1-216-821-11	METAL CHIP	1K	5%	1/16W
R477	1-216-821-11	METAL CHIP	1K	5%	1/16W
R478	1-216-817-11	METAL CHIP	470	5%	1/16W
R480	1-216-833-11	METAL CHIP	10K	5%	1/16W
R481	1-216-821-11	METAL CHIP	1K	5%	1/16W

Ref. No.	Part No.	Description			Remarks
R482	1-216-833-11	METAL CHIP	10K	5%	1/16W
R500	1-216-864-11	METAL CHIP	0	5%	1/16W
R501	1-216-841-11	METAL CHIP	47K	5%	1/16W
R503	1-216-841-11	METAL CHIP	47K	5%	1/16W
R504	1-216-833-11	METAL CHIP	10K	5%	1/16W
R505	1-216-843-11	METAL CHIP	68K	5%	1/16W
R506	1-216-847-11	METAL CHIP	150K	5%	1/16W
R507	1-216-864-11	METAL CHIP	0	5%	1/16W
R508	1-216-829-11	METAL CHIP	4.7K	5%	1/16W
R510	1-216-845-11	METAL CHIP	100K	5%	1/16W
R511	1-216-821-11	METAL CHIP	1K	5%	1/16W
R512	1-216-841-11	METAL CHIP	47K	5%	1/16W
R514	1-216-821-11	METAL CHIP	1K	5%	1/16W
R515	1-216-821-11	METAL CHIP	1K	5%	1/16W
R516	1-216-821-11	METAL CHIP	1K	5%	1/16W
R517	1-216-864-11	METAL CHIP	0	5%	1/16W
R518	1-216-814-11	METAL CHIP	270	5%	1/16W
R519	1-216-817-11	METAL CHIP	470	5%	1/16W
R520	1-216-833-11	METAL CHIP	10K	5%	1/16W
R521	1-216-821-11	METAL CHIP	1K	5%	1/16W
R522	1-216-851-11	METAL CHIP	330K	5%	1/16W
R523	1-216-821-11	METAL CHIP	1K	5%	1/16W
R524	1-216-845-11	METAL CHIP	100K	5%	1/16W
R525	1-216-857-11	METAL CHIP	1M	5%	1/16W
R526	1-216-851-11	METAL CHIP	330K	5%	1/16W
R527	1-216-864-11	METAL CHIP	0	5%	1/16W
R529	1-216-833-11	METAL CHIP	10K	5%	1/16W
R530	1-216-833-11	METAL CHIP	10K	5%	1/16W
R531	1-216-833-11	METAL CHIP	10K	5%	1/16W
R532	1-216-821-11	METAL CHIP	1K	5%	1/16W
R536	1-216-841-11	METAL CHIP	47K	5%	1/16W
R537	1-216-841-11	METAL CHIP	47K	5%	1/16W
R538	1-216-841-11	METAL CHIP	47K	5%	1/16W
R539	1-216-841-11	METAL CHIP	47K	5%	1/16W
R540	1-216-821-11	METAL CHIP	1K	5%	1/16W
R541	1-216-821-11	METAL CHIP	1K	5%	1/16W
R542	1-216-864-11	METAL CHIP	0	5%	1/16W
R543	1-216-841-11	METAL CHIP	47K	5%	1/16W
R545	1-216-823-11	METAL CHIP	1.5K	5%	1/16W
R547	1-216-864-11	METAL CHIP	0	5%	1/16W
R550	1-216-841-11	METAL CHIP	47K	5%	1/16W
R551	1-216-841-11	METAL CHIP	47K	5%	1/16W
R555	1-216-864-11	METAL CHIP	0	5%	1/16W
R559	1-216-809-11	METAL CHIP	100	5%	1/16W
R560	1-216-817-11	METAL CHIP	470	5%	1/16W
R563	1-216-864-11	METAL CHIP	0	5%	1/16W
R564	1-216-864-11	METAL CHIP	0	5%	1/16W
R565	1-216-841-11	METAL CHIP	47K	5%	1/16W
R568	1-216-841-11	METAL CHIP	47K	5%	1/16W
R569	1-216-841-11	METAL CHIP	47K	5%	1/16W
R570	1-216-841-11	METAL CHIP	47K	5%	1/16W
R571	1-216-841-11	METAL CHIP	47K	5%	1/16W
R572	1-216-841-11	METAL CHIP	47K	5%	1/16W
R573	1-216-817-11	METAL CHIP	470	5%	1/16W
R574	1-216-841-11	METAL CHIP	47K	5%	1/16W
R575	1-216-821-11	METAL CHIP	1K	5%	1/16W
R576	1-216-841-11	METAL CHIP	47K	5%	1/16W
R577	1-216-864-11	METAL CHIP	0	5%	1/16W
R578	1-216-821-11	METAL CHIP	1K	5%	1/16W
R579	1-216-857-11	METAL CHIP	1M	5%	1/16W
R580	1-216-821-11	METAL CHIP	1K	5%	1/16W
R581	1-216-864-11	METAL CHIP	0	5%	1/16W
R583	1-216-829-11	METAL CHIP	4.7K	5%	1/16W
R584	1-216-829-11	METAL CHIP	4.7K	5%	1/16W
R585	1-216-829-11	METAL CHIP	4.7K	5%	1/16W
R586	1-216-821-11	METAL CHIP	1K	5%	1/16W
R587	1-216-864-11	METAL CHIP	0	5%	1/16W
R588	1-216-821-11	METAL CHIP	1K	5%	1/16W
R589	1-216-821-11	METAL CHIP	1K	5%	1/16W
R590	1-216-864-11	METAL CHIP	0	5%	1/16W
R591	1-216-845-11	METAL CHIP	100K	5%	1/16W
R592	1-216-845-11	METAL CHIP	100K	5%	1/16W
R594	1-216-821-11	METAL CHIP	1K	5%	1/16W
R595	1-216-833-11	METAL CHIP	10K	5%	1/16W
R596	1-216-821-11	METAL CHIP	1K	5%	1/16W
R597	1-216-838-11	METAL CHIP	27K	5%	1/16W
R600	1-216-864-11	METAL CHIP	0	5%	1/16W
R601	1-216-809-11	METAL CHIP	100	5%	1/16W
R602	1-216-809-11	METAL CHIP	100	5%	1/16W
R603	1-216-827-11	METAL CHIP	3.3K	5%	1/16W
R604	1-216-827-11	METAL CHIP	3.3K	5%	1/16W
R605	1-216-827-11	METAL CHIP	3.3K	5%	1/16W
R606	1-216-830-11	METAL CHIP	5.6K	5%	1/16W
R607	1-216-823-11	METAL CHIP	1.5K	5%	1/16W
R608	1-216-829-11	METAL CHIP	4.7K	5%	1/16W
R609	1-216-138-00	METAL CHIP	3.3	5%	1/8W
R610	1-216-825-11	METAL CHIP	2.2K	5%	1/16W
R642	1-216-864-11	METAL CHIP	0	5%	1/16W
R644	1-216-864-11	METAL CHIP	0	5%	1/16W
R645	1-216-864-11	METAL CHIP	0	5%	1/16W
R648	1-216-821-11	METAL CHIP	1K	5%	1/16W
R649	1-216-821-11	METAL CHIP	1K	5%	1/16W
R651	1-216-841-11	METAL CHIP	47K	5%	1/16W
R652	1-216-821-11	METAL CHIP	1K	5%	1/16W
R653	1-216-821-11	METAL CHIP	1K	5%	1/16W
R655	1-216-857-11	METAL CHIP	1M	5%	1/16W
R656	1-216-815-11	METAL CHIP	330	5%	1/16W
R657	1-216-821-11	METAL CHIP	1K	5%	1/16W
R658	1-216-821-11	METAL CHIP	1K	5%	1/16W
R659	1-216-864-11	METAL CHIP	0	5%	1/16W
R661	1-216-821-11	METAL CHIP	1K	5%	1/16W
R668	1-216-841-11	METAL CHIP	47K	5%	1/16W
R669	1-216-841-11	METAL CHIP	47K	5%	1/16W
R671	1-216-841-11	METAL CHIP	47K	5%	1/16W
R672	1-216-821-11	METAL CHIP	1K	5%	1/16W
R673	1-216-864-11	METAL CHIP	0	5%	1/16W
R674	1-216-845-11	METAL CHIP	100K	5%	1/16W
R675	1-216-842-11	METAL CHIP	56K	5%	1/16W
R676	1-216-841-11	METAL CHIP	47K	5%	1/16W
R677	1-216-841-11	METAL CHIP	47K	5%	1/16W
R678	1-216-841-11	METAL CHIP	47K	5%	1/16W
R681	1-216-821-11	METAL CHIP	1K	5%	1/16W
R700	1-216-833-11	METAL CHIP	10K	5%	1/16W
R703	1-216-845-11	METAL CHIP	100K	5%	1/16W
R707	1-216-833-11	METAL CHIP	10K	5%	1/16W
R708	1-216-833-11	METAL CHIP	10K	5%	1/16W
R709	1-216-837-11	METAL CHIP	22K	5%	1/16W
R710	1-216-837-11	METAL CHIP	22K	5%	1/16W
R727	1-216-833-11	METAL CHIP	10K	5%	1/16W
R732	1-218-873-11	METAL CHIP	12K	0.50%	1/16W
R735	1-216-864-11	METAL CHIP	0	5%	1/16W
R736	1-218-873-11	METAL CHIP	12K	0.50%	1/16W
R737	1-218-871-11	METAL CHIP	10K	0.50%	1/16W
R738	1-211-987-11	METAL GLAZE	56	0.50%	1/16W
R739	1-211-987-11	METAL GLAZE	56	0.50%	1/16W
R740	1-211-987-11	METAL GLAZE	56	0.50%	1/16W
R741	1-211-987-11	METAL GLAZE	56	0.50%	1/16W
R742	1-216-833-11	METAL CHIP	10K	5%	1/16W
R746	1-216-864-11	METAL CHIP	0	5%	1/16W
R747	1-216-837-11	METAL CHIP	22K	5%	1/16W
R749	1-216-833-11	METAL CHIP	10K	5%	1/16W
R750	1-216-833-11	METAL CHIP	10K	5%	1/16W
R751	1-216-833-11	METAL CHIP	10K	5%	1/16W
R752	1-216-864-11	METAL CHIP	0	5%	1/16W
R753	1-216-864-11	METAL CHIP	0	5%	1/16W
R754	1-216-864-11	METAL CHIP	0	5%	1/16W
R755	1-216-864-11	METAL CHIP	0	5%	1/16W
R758	1-216-833-11	METAL CHIP	10K	5%	1/16W
R759	1-216-833-11	METAL CHIP	10K	5%	1/16W
R760	1-218-871-11	METAL CHIP	10K	0.50%	1/16W
R761	1-216-833-11	METAL CHIP	10K	5%	1/16W
R762	1-216-857-11	METAL CHIP	1M	5%	1/16W
R763	1-216-845-11	METAL CHIP	100K	5%	1/16W
R764	1-216-833-11	METAL CHIP	10K	5%	1/16W
R765	1-216-821-11	METAL CHIP	1K	5%	1/16W

< CONPOSITION CIRCUIT BLOCK >

RB500	1-236-436-11	NETWORK, RES 100K	
RB501	1-236-907-11	NETWORK RESISTOR (CHIP) 100K	
RB502	1-236-907-11	NETWORK RESISTOR (CHIP) 100K	
RB503	1-236-412-11	NETWORK, RES 1.0K	
RB504	1-236-904-11	NETWORK RESISTOR (CHIP) 1.0K	
RB505	1-236-904-11	NETWORK RESISTOR (CHIP) 1.0K	
RB506	1-236-412-11	NETWORK, RES 1.0K	
RB507	1-236-424-11	NETWORK, RES 10K	
RB508	1-236-904-11	NETWORK RESISTOR (CHIP) 1.0K	
RB509	1-236-904-11	NETWORK RESISTOR (CHIP) 1.0K	
RB510	1-236-904-11	NETWORK RESISTOR (CHIP) 1.0K	
RB511	1-236-908-11	NETWORK RESISTOR (CHIP) 10K	
RB512	1-236-904-11	NETWORK RESISTOR (CHIP) 1.0K	
RB513	1-236-904-11	NETWORK RESISTOR (CHIP) 1.0K	
RB514	1-236-412-11	NETWORK, RES 1.0K	
RB515	1-236-904-11	NETWORK RESISTOR (CHIP) 1.0K	
RB516	1-236-412-11	NETWORK, RES 1.0K	
RB517	1-236-971-11	NETWORK, RES 0	
RB518	1-236-971-11	NETWORK, RES 0	
RB519	1-236-904-11	NETWORK RESISTOR (CHIP) 1.0K	
RB520	1-236-971-11	NETWORK, RES 0	
RB522	1-236-412-11	NETWORK, RES 1.0K	
RB523	1-236-904-11	NETWORK RESISTOR (CHIP) 1.0K	
RB524	1-236-904-11	NETWORK RESISTOR (CHIP) 1.0K	
RB525	1-236-971-11	NETWORK, RES 0	
RB526	1-236-412-11	NETWORK, RES 1.0K	
RB527	1-236-904-11	NETWORK RESISTOR (CHIP) 1.0K	
RB641	1-236-440-11	NETWORK, RES 220K	
RB642	1-236-440-11	NETWORK, RES 220K	
RB643	1-236-432-11	NETWORK, RES 47K	
RB644	1-236-432-11	NETWORK, RES 47K	

< VIBRATOR >

X401	1-760-654-21	VIBRATOR, CRYSTAL 13.5MHZ	
X402	1-760-655-21	VIBRATOR, CRYSTAL 20MHZ	
X500	1-579-369-21	VIBRATOR 10MHZ	
X501	1-760-458-21	VIBRATOR, CRYSTAL 32.768KHZ	
X502	1-760-497-21	VIBRATOR, LITHIUM NIOBATE 6MHZ	
X641	1-579-922-11	VIBRATOR, CRYSTAL (CHIP TYPE) 24.576MHZ	
X700	1-760-497-21	VIBRATOR, LITHIUM NIOBATE 6MHZ	
X701	1-579-922-11	VIBRATOR, CRYSTAL (CHIP TYPE) 24.576MHZ	

	A-7072-975-A	JK-149 BOARD, COMPLETE	
		**********	
		(Ref.No.4,000 Series)	
*	3-947-530-01	HOLDER, TERMINAL, S	

< CAPACITOR >

C200	1-162-964-11	CERAMIC CHIP	0.001uF	10%	50V

< CONNECTOR >

CN201	1-691-494-21	CONNECTOR, FFC/FPC 15P
CN202	1-691-492-21	CONNECTOR, FFC/FPC 13P
CN203	1-770-305-11	CONNECTOR, FFC/FPC 10P

< DIODE >

D200	8-719-421-59	DIODE MA3130WA-(TX)
D201	8-719-421-59	DIODE MA3130WA-(TX)
D202	8-719-421-59	DIODE MA3130WA-(TX)
D203	8-719-421-59	DIODE MA3130WA-(TX)
D204	8-719-421-59	DIODE MA3130WA-(TX)
D205	8-719-420-14	DIODE MA8082-M
D206	8-719-420-14	DIODE MA8082-M

< FERRITE BEAD >

FB201	1-543-955-11	BEAD, FERRITE (CHIP)
FB202	1-543-955-11	BEAD, FERRITE (CHIP)
FB203	1-543-955-11	BEAD, FERRITE (CHIP)
FB204	1-543-955-11	BEAD, FERRITE (CHIP)

JK-149 LD-86

Ref. No.	Part No.	Description			Remarks
		< JACK >			
J200	1-537-747-31	TERMINAL BOARD (AUDIO/VIDEO OUT)			
J201	1-566-850-31	CONNECTOR, (S) TERMINAL 4P(S VIDEO OUT)			
		< COIL >			
L200	1-543-956-21	BEAD, FERRITE (CHIP)			
L201	1-543-956-21	BEAD, FERRITE (CHIP)			
L203	1-412-033-11	INDUCTOR CHIP 220uH			
L204	1-412-033-11	INDUCTOR CHIP 220uH			
		< RESISTOR >			
R203	1-216-864-11	METAL CHIP	0	5%	1/16W
R212	1-216-864-11	METAL CHIP	0	5%	1/16W
R213	1-216-864-11	METAL CHIP	0	5%	1/16W
	A-7072-885-A	LD-86 BOARD, COMPLETE			
		**********			
		(Ref.No.3,000 Series)			
		< CAPACITOR >			
C302	1-164-360-11	CERAMIC CHIP	0.1uF		16V
C303	1-165-176-11	CERAMIC CHIP	0.047uF	10%	16V
C304	1-165-176-11	CERAMIC CHIP	0.047uF	10%	16V
C305	1-164-677-11	CERAMIC CHIP	0.033uF	10%	16V
C306	1-164-677-11	CERAMIC CHIP	0.033uF	10%	16V
C307	1-164-227-11	CERAMIC CHIP	0.022uF	10%	25V
C308	1-162-967-11	CERAMIC CHIP	0.0033uF	10%	50V
C309	1-162-967-11	CERAMIC CHIP	0.0033uF	10%	50V
C310	1-164-227-11	CERAMIC CHIP	0.022uF	10%	25V
C311	1-162-968-11	CERAMIC CHIP	0.0047uF	10%	50V
C312	1-162-968-11	CERAMIC CHIP	0.0047uF	10%	50V
C315	1-164-004-11	CERAMIC CHIP	0.1uF	10%	25V
C316	1-164-004-11	CERAMIC CHIP	0.1uF	10%	25V
C317	1-135-210-11	TANTALUM CHIP	4.7uF	20%	10V
C319	1-135-201-11	TANTALUM CHIP	10uF	20%	4V
C320	1-135-210-11	TANTALUM CHIP	4.7uF	20%	10V
C321	1-162-970-11	CERAMIC CHIP	0.01uF	10%	25V
C322	1-135-151-21	TANTALUM CHIP	4.7uF	20%	4V
C324	1-164-677-11	CERAMIC CHIP	0.033uF	10%	16V
C325	1-162-964-11	CERAMIC CHIP	0.001uF	10%	50V
C326	1-162-974-11	CERAMIC CHIP	0.01uF		50V
C327	1-164-360-11	CERAMIC CHIP	0.1uF		16V
C328	1-162-974-11	CERAMIC CHIP	0.01uF		50V
C330	1-135-149-21	TANTALUM CHIP	2.2uF	20%	10V
C331	1-162-974-11	CERAMIC CHIP	0.01uF		50V
C333	1-164-489-11	CERAMIC CHIP	0.22uF	10%	16V
C334	1-164-346-11	CERAMIC CHIP	1uF		16V
C335	1-162-970-11	CERAMIC CHIP	0.01uF	10%	25V
C336	1-162-974-11	CERAMIC CHIP	0.01uF		50V
C337	1-135-210-11	TANTALUM CHIP	4.7uF	20%	10V
C338	1-135-210-11	TANTALUM CHIP	4.7uF	20%	10V
C339	1-164-346-11	CERAMIC CHIP	1uF		16V
C340	1-162-974-11	CERAMIC CHIP	0.01uF		50V
C341	1-135-149-21	TANTALUM CHIP	2.2uF	20%	10V
C342	1-162-923-11	CERAMIC CHIP	47PF	5%	50V

Ref. No.	Part No.	Description			Remarks
C343	1-104-752-11	TANTAL. CHIP	33uF	20%	6.3V
C344	1-165-128-11	CERAMIC CHIP	0.22uF		16V
C345	1-162-974-11	CERAMIC CHIP	0.01uF		50V
C346	1-162-974-11	CERAMIC CHIP	0.01uF		50V
C347	1-162-974-11	CERAMIC CHIP	0.01uF		50V
C348	1-104-752-11	TANTAL. CHIP	33uF	20%	6.3V
C349	1-162-964-11	CERAMIC CHIP	0.001uF	10%	50V
C350	1-135-210-11	TANTALUM CHIP	4.7uF	20%	10V
C351	1-162-974-11	CERAMIC CHIP	0.01uF		50V
C352	1-164-360-11	CERAMIC CHIP	0.1uF		16V
C390	1-104-851-11	TANTAL. CHIP	10uF	20%	10V
		< CONNECTOR >			
CN301	1-750-358-21	CONNECTOR, FFC/FPC (ZIF) 30P			
CN302	1-766-833-21	CONNECTOR, FFC/FPC (ZIF) 21P			
CN304	1-750-345-11	CONNECTOR, FFC/EPC (ZIF) 30P			
		< DIODE >			
D301	8-719-050-49	DIODE RD9.1UM-T1B			
D302	8-719-050-49	DIODE RD9.1UM-T1B			
D303	8-719-050-49	DIODE RD9.1UM-T1B			
D304	8-719-050-49	DIODE RD9.1UM-T1B			
D305	8-719-050-49	DIODE RD9.1UM-T1B			
		< FERRITE BEAD >			
FB001	1-543-955-11	BEAD, FERRITE (CHIP)			
		< IC >			
IC301	8-759-058-45	IC NJM3403AV			
IC302	8-759-059-03	IC LM324PW			
IC303	8-759-058-41	IC NJM3416V			
IC304	8-759-058-41	IC NJM3416V			
IC305	8-759-075-97	IC LM358PW			
IC306	8-759-248-78	IC MB88102PFV-G-BND-ER			
IC307	8-752-880-04	IC CXP61120-037R			
IC308	8-759-059-03	IC LM324PW			
IC309	8-759-823-51	IC LB1830M			
IC310	8-759-327-33	IC BU9241FS-E2			
IC311	8-759-351-46	IC MPC17A34RVMEL			
IC312	8-752-377-38	IC CXD2430N			
IC313	8-759-050-50	IC SN74HCT04APW-E05			
		< COIL >			
L301	1-410-993-11	INDUCTOR CHIP 1uH			
L302	1-410-993-11	INDUCTOR CHIP 1uH			
L303	1-414-398-11	INDUCTOR 10uH			
L304	1-414-398-11	INDUCTOR 10uH			
L305	1-414-398-11	INDUCTOR 10uH			
L306	1-414-398-11	INDUCTOR 10uH			
L307	1-414-398-11	INDUCTOR 10uH			
L308	1-414-392-21	INDUCTOR 1uH			
L309	1-414-392-21	INDUCTOR 1uH			
L310	1-414-398-11	INDUCTOR 10uH			
L311	1-414-398-11	INDUCTOR 10uH			
L312	1-414-398-11	INDUCTOR 10uH			
L315	1-414-404-11	INDUCTOR 100uH			

LD-86 LH-10

Ref. No.	Part No.	Description			Remarks
		< TRANSISTOR >			
Q301	8-729-429-01	TRANSISTOR UN9119-(TXE)			
Q302	8-729-429-01	TRANSISTOR UN9119-(TXE)			
Q303	8-729-425-64	TRANSISTOR 2SD2216-Q			
Q304	8-729-425-64	TRANSISTOR 2SD2216-Q			
Q305	8-729-427-70	TRANSISTOR XP4401			
Q306	8-729-429-18	TRANSISTOR UN9213			
Q307	8-729-429-18	TRANSISTOR UN9213			
		< RESISTOR >			
R301	1-218-851-11	METAL CHIP	1.5K	0.50%	1/16W
R302	1-218-851-11	METAL CHIP	1.5K	0.50%	1/16W
R303	1-216-837-11	METAL CHIP	22K	5%	1/16W
R304	1-216-837-11	METAL CHIP	22K	5%	1/16W
R305	1-216-837-11	METAL CHIP	22K	5%	1/16W
R306	1-216-837-11	METAL CHIP	22K	5%	1/16W
R307	1-218-871-11	METAL CHIP	10K	0.50%	1/16W
R308	1-218-871-11	METAL CHIP	10K	0.50%	1/16W
R309	1-218-871-11	METAL CHIP	10K	0.50%	1/16W
R310	1-218-895-11	METAL CHIP	100K	0.50%	1/16W
R311	1-218-853-11	METAL CHIP	1.8K	0.50%	1/16W
R312	1-218-871-11	METAL CHIP	10K	0.50%	1/16W
R313	1-218-895-11	METAL CHIP	100K	0.50%	1/16W
R314	1-218-853-11	METAL CHIP	1.8K	0.50%	1/16W
R315	1-218-895-11	METAL CHIP	100K	0.50%	1/16W
R316	1-218-895-11	METAL CHIP	100K	0.50%	1/16W
R317	1-218-869-11	METAL CHIP	8.2K	0.50%	1/16W
R318	1-218-869-11	METAL CHIP	8.2K	0.50%	1/16W
R319	1-218-875-11	METAL CHIP	15K	0.50%	1/16W
R320	1-218-895-11	METAL CHIP	100K	0.50%	1/16W
R321	1-218-903-11	METAL CHIP	220K	0.50%	1/16W
R322	1-218-903-11	METAL CHIP	220K	0.50%	1/16W
R323	1-218-895-11	METAL CHIP	100K	0.50%	1/16W
R324	1-218-875-11	METAL CHIP	15K	0.50%	1/16W
R327	1-216-001-00	METAL CHIP	10	5%	1/10W
R328	1-218-887-11	METAL CHIP	47K	0.50%	1/16W
R329	1-218-887-11	METAL CHIP	47K	0.50%	1/16W
R330	1-216-013-00	METAL CHIP	33	5%	1/10W
R331	1-216-821-11	METAL CHIP	1K	5%	1/16W
R334	1-216-825-11	METAL CHIP	2.2K	5%	1/16W
R335	1-216-845-11	METAL CHIP	100K	5%	1/16W
R337	1-216-848-11	METAL CHIP	180K	5%	1/16W
R338	1-216-851-11	METAL CHIP	330K	5%	1/16W
R339	1-216-836-11	METAL CHIP	18K	5%	1/16W
R340	1-216-830-11	METAL CHIP	5.6K	5%	1/16W
R341	1-216-848-11	METAL CHIP	180K	5%	1/16W
R344	1-216-841-11	METAL CHIP	47K	5%	1/16W
R345	1-216-815-11	METAL CHIP	330	5%	1/16W
R346	1-216-837-11	METAL CHIP	22K	5%	1/16W
R348	1-216-837-11	METAL CHIP	22K	5%	1/16W
R349	1-216-833-11	METAL CHIP	10K	5%	1/16W
R350	1-216-822-11	METAL CHIP	1.2K	5%	1/16W
R355	1-216-837-11	METAL CHIP	22K	5%	1/16W
R356	1-216-837-11	METAL CHIP	22K	5%	1/16W
R361	1-216-848-11	METAL CHIP	180K	5%	1/16W

Ref. No.	Part No.	Description			Remarks
R362	1-216-833-11	METAL CHIP	10K	5%	1/16W
R363	1-216-848-11	METAL CHIP	180K	5%	1/16W
R364	1-216-833-11	METAL CHIP	10K	5%	1/16W
R365	1-216-821-11	METAL CHIP	1K	5%	1/16W
R366	1-216-845-11	METAL CHIP	100K	5%	1/16W
R369	1-216-833-11	METAL CHIP	10K	5%	1/16W
R370	1-216-835-11	METAL CHIP	15K	5%	1/16W
R371	1-216-838-11	METAL CHIP	27K	5%	1/16W
R372	1-216-829-11	METAL CHIP	4.7K	5%	1/16W
R373	1-216-134-00	METAL CHIP	2.2	5%	1/8W
R374	1-216-827-11	METAL CHIP	3.3K	5%	1/16W
R375	1-216-814-11	METAL CHIP	270	5%	1/16W
R376	1-216-857-11	METAL CHIP	1M	5%	1/16W
R377	1-216-841-11	METAL CHIP	47K	5%	1/16W
R378	1-216-841-11	METAL CHIP	47K	5%	1/16W
R379	1-216-821-11	METAL CHIP	1K	5%	1/16W
R380	1-216-821-11	METAL CHIP	1K	5%	1/16W
R381	1-216-842-11	METAL CHIP	56K	5%	1/16W
R382	1-216-821-11	METAL CHIP	1K	5%	1/16W
R383	1-216-837-11	METAL CHIP	22K	5%	1/16W
R390	1-218-887-11	METAL CHIP	47K	0.50%	1/16W
R391	1-218-871-11	METAL CHIP	10K	0.50%	1/16W
R398	1-216-864-11	METAL CHIP	0	5%	1/16W
R399	1-216-864-11	METAL CHIP	0	5%	1/16W
		< VIBRATOR >			
X301	1-579-553-11	VIBRATOR 12MHZ			
	A-7072-904-A	LH-10 BOARD, COMPLETE			
		**********			
		(Ref.No.5,000 Series)			
		< CAPACITOR >			
C301	1-135-181-21	TANTALUM CHIP	4.7uF	20%	6.3V
C302	1-135-181-21	TANTALUM CHIP	4.7uF	20%	6.3V
C303	1-135-181-21	TANTALUM CHIP	4.7uF	20%	6.3V
C304	1-135-181-21	TANTALUM CHIP	4.7uF	20%	6.3V
C305	1-135-181-21	TANTALUM CHIP	4.7uF	20%	6.3V
C306	1-135-181-21	TANTALUM CHIP	4.7uF	20%	6.3V
C307	1-164-156-11	CERAMIC CHIP	0.1uF		25V
C308	1-164-156-11	CERAMIC CHIP	0.1uF		25V
C311	1-104-851-11	TANTAL. CHIP	10uF	20%	10V
C312	1-164-156-11	CERAMIC CHIP	0.1uF		25V
C313	1-162-964-11	CERAMIC CHIP	0.001uF	10%	50V
C314	1-162-964-11	CERAMIC CHIP	0.001uF	10%	50V
C315	1-162-964-11	CERAMIC CHIP	0.001uF	10%	50V
C316	1-162-964-11	CERAMIC CHIP	0.001uF	10%	50V
C317	1-162-964-11	CERAMIC CHIP	0.001uF	10%	50V
C318	1-164-156-11	CERAMIC CHIP	0.1uF		25V
C319	1-164-156-11	CERAMIC CHIP	0.1uF		25V
		< CONNECTOR >			
* CN301	1-766-432-21	HOUSING, CONNECTOR 6P			
* CN302	1-766-432-21	HOUSING, CONNECTOR 6P			
CN303	1-569-478-21	CONNECTOR, FPC 20P			

Ref. No.	Part No.	Description			Remarks
		< DIODE >			
D301	8-719-027-48	DIODE MA142WA			
D302	8-719-404-49	DIODE MA111			
D303	8-719-422-70	DIODE MA8075			
		< FERRITE BEAD >			
FB303	1-543-956-21	BEAD, FERRITE (CHIP)			
FB304	1-543-956-21	BEAD, FERRITE (CHIP)			
		< IC >			
IC301	8-759-111-56	IC uPC4572G2			
		< JACK >			
J301	1-695-828-11	JACK (HEADPHONE)			
J302	1-691-258-11	JACK (LANC)			
		< COIL >			
L301	1-414-406-11	INDUCTOR 220uH			
L302	1-414-406-11	INDUCTOR 220uH			
		< TRANSISTOR >			
Q301	8-729-420-20	TRANSISTOR XN4312			
Q302	8-729-403-24	TRANSISTOR XN4210			
		< RESISTOR >			
R301	1-216-849-11	METAL CHIP	220K	5%	1/16W
R302	1-216-849-11	METAL CHIP	220K	5%	1/16W
R303	1-216-839-11	METAL CHIP	33K	5%	1/16W
R304	1-216-839-11	METAL CHIP	33K	5%	1/16W
R305	1-218-877-11	METAL CHIP	18K	0.50%	1/16W
R306	1-218-877-11	METAL CHIP	18K	0.50%	1/16W
R307	1-216-845-11	METAL CHIP	100K	5%	1/16W
R308	1-216-845-11	METAL CHIP	100K	5%	1/16W
R309	1-218-887-11	METAL CHIP	47K	0.50%	1/16W
R310	1-218-887-11	METAL CHIP	47K	0.50%	1/16W
R311	1-218-887-11	METAL CHIP	47K	0.50%	1/16W
R312	1-218-887-11	METAL CHIP	47K	0.50%	1/16W
R314	1-218-871-11	METAL CHIP	10K	0.50%	1/16W
R315	1-218-869-11	METAL CHIP	8.2K	0.50%	1/16W
R316	1-216-829-11	METAL CHIP	4.7K	5%	1/16W
R317	1-216-803-11	METAL CHIP	33	5%	1/16W
R318	1-216-803-11	METAL CHIP	33	5%	1/16W
		< VARIABLE RESISTOR >			
RV301	1-225-349-11	RES, VAR, CARBON 20K (PHONE LEVEL)			
	A-7072-892-A	LI-60 BOARD, COMPLETE			
		**********			
		(Ref.No.5,000 Series)			
		< CAPACITOR >			
C930	1-164-346-11	CERAMIC CHIP	1uF		16V

Ref. No.	Part No.	Description			Remarks
		< CONNECTOR >			
CN930	1-580-055-21	PIN, CONNECTOR 2P			
		< DIODE >			
D930	8-719-420-14	DIODE MA8082-M			
		< HOLDER >			
LI930	1-550-104-32	HOLDER, BATTERY			
	A-7072-889-A	MA-280 BOARD, COMPLETE			
		**********			
		(Ref.No.2,000 Series)			
		< CAPACITOR >			
C511	1-164-360-11	CERAMIC CHIP	0.1uF		16V
C512	1-164-360-11	CERAMIC CHIP	0.1uF		16V
C513	1-162-964-11	CERAMIC CHIP	0.001uF	10%	50V
C514	1-162-964-11	CERAMIC CHIP	0.001uF	10%	50V
C515	1-135-091-00	TANTALUM CHIP	1uF	20%	16V
C516	1-135-091-00	TANTALUM CHIP	1uF	20%	16V
C517	1-135-070-00	TANTALUM CHIP	0.1uF	10%	35V
C518	1-135-070-00	TANTALUM CHIP	0.1uF	10%	35V
C521	1-162-927-11	CERAMIC CHIP	100PF	5%	50V
C522	1-162-927-11	CERAMIC CHIP	100PF	5%	50V
C523	1-162-927-11	CERAMIC CHIP	100PF	5%	50V
C524	1-162-927-11	CERAMIC CHIP	100PF	5%	50V
C525	1-162-957-11	CERAMIC CHIP	220PF	5%	50V
C526	1-162-957-11	CERAMIC CHIP	220PF	5%	50V
C527	1-135-145-11	TANTALUM CHIP	0.47uF	10%	35V
C528	1-135-145-11	TANTALUM CHIP	0.47uF	10%	35V
C530	1-164-360-11	CERAMIC CHIP	0.1uF		16V
C531	1-104-851-11	TANTAL. CHIP	10uF	20%	10V
C541	1-104-851-11	TANTAL. CHIP	10uF	20%	10V
C542	1-162-927-11	CERAMIC CHIP	100PF	5%	50V
C543	1-162-927-11	CERAMIC CHIP	100PF	5%	50V
C544	1-135-091-00	TANTALUM CHIP	1uF	20%	16V
C545	1-135-091-00	TANTALUM CHIP	1uF	20%	16V
C546	1-162-927-11	CERAMIC CHIP	100PF	5%	50V
C547	1-162-927-11	CERAMIC CHIP	100PF	5%	50V
C548	1-135-070-00	TANTALUM CHIP	0.1uF	10%	35V
C549	1-135-070-00	TANTALUM CHIP	0.1uF	10%	35V
C550	1-135-072-21	TANTALUM CHIP	0.22uF	10%	35V
C551	1-135-072-21	TANTALUM CHIP	0.22uF	10%	35V
C552	1-162-927-11	CERAMIC CHIP	100PF	5%	50V
C553	1-162-927-11	CERAMIC CHIP	100PF	5%	50V
C554	1-162-957-11	CERAMIC CHIP	220PF	5%	50V
C555	1-162-957-11	CERAMIC CHIP	220PF	5%	50V
C556	1-135-070-00	TANTALUM CHIP	0.1uF	10%	35V
C557	1-135-070-00	TANTALUM CHIP	0.1uF	10%	35V
		< CONNECTOR >			
CN501	1-691-491-21	CONNECTOR, FFC/FPC 12P			
CN502	1-770-693-11	CONNECTOR, FFC/FPC 10P			

Ref. No.	Part No.	Description			Remarks
		< DIODE >			
D501	8-719-404-49	DIODE MA111			
		< IC >			
IC501	8-759-111-56	IC uPC4572G2			
IC502	8-759-111-56	IC uPC4572G2			
		< TRANSISTOR >			
Q501	8-729-402-81	TRANSISTOR XN4501			
Q502	8-729-402-81	TRANSISTOR XN4501			
Q503	8-729-905-38	TRANSISTOR 2SC4081T106R			
Q504	8-729-905-38	TRANSISTOR 2SC4081T106R			
Q505	8-729-402-81	TRANSISTOR XN4501			
Q506	8-729-905-38	TRANSISTOR 2SC4081T106R			
		< RESISTOR >			
R502	1-216-831-11	METAL CHIP	6.8K	5%	1/16W
R503	1-216-831-11	METAL CHIP	6.8K	5%	1/16W
R504	1-216-842-11	METAL CHIP	56K	5%	1/16W
R505	1-216-842-11	METAL CHIP	56K	5%	1/16W
R511	1-218-887-11	METAL CHIP	47K	0.50%	1/16W
R512	1-218-887-11	METAL CHIP	47K	0.50%	1/16W
R513	1-218-889-11	METAL CHIP	56K	0.50%	1/16W
R514	1-218-889-11	METAL CHIP	56K	0.50%	1/16W
R515	1-218-859-11	METAL CHIP	3.3K	0.50%	1/16W
R516	1-218-859-11	METAL CHIP	3.3K	0.50%	1/16W
R517	1-218-887-11	METAL CHIP	47K	0.50%	1/16W
R518	1-218-887-11	METAL CHIP	47K	0.50%	1/16W
R520	1-216-825-11	METAL CHIP	2.2K	5%	1/16W
R521	1-216-841-11	METAL CHIP	47K	5%	1/16W
R522	1-216-845-11	METAL CHIP	100K	5%	1/16W
R523	1-218-847-11	METAL CHIP	1K	0.50%	1/16W
R524	1-218-847-11	METAL CHIP	1K	0.50%	1/16W
R525	1-218-825-11	METAL GLAZE	120	0.50%	1/16W
R526	1-218-825-11	METAL GLAZE	120	0.50%	1/16W
R527	1-216-857-11	METAL CHIP	1M	5%	1/16W
R528	1-216-857-11	METAL CHIP	1M	5%	1/16W
R531	1-216-825-11	METAL CHIP	2.2K	5%	1/16W
R532	1-218-865-11	METAL CHIP	5.6K	0.50%	1/16W
R533	1-218-865-11	METAL CHIP	5.6K	0.50%	1/16W
R534	1-218-887-11	METAL CHIP	47K	0.50%	1/16W
R535	1-218-887-11	METAL CHIP	47K	0.50%	1/16W
R536	1-218-889-11	METAL CHIP	56K	0.50%	1/16W
R537	1-218-889-11	METAL CHIP	56K	0.50%	1/16W
R538	1-218-859-11	METAL CHIP	3.3K	0.50%	1/16W
R539	1-218-859-11	METAL CHIP	3.3K	0.50%	1/16W
R540	1-218-887-11	METAL CHIP	47K	0.50%	1/16W
R541	1-218-887-11	METAL CHIP	47K	0.50%	1/16W
R551	1-218-847-11	METAL CHIP	1K	0.50%	1/16W
R552	1-218-847-11	METAL CHIP	1K	0.50%	1/16W
R553	1-218-825-11	METAL GLAZE	120	0.50%	1/16W
R554	1-218-825-11	METAL GLAZE	120	0.50%	1/16W
R555	1-216-857-11	METAL CHIP	1M	5%	1/16W
R556	1-216-857-11	METAL CHIP	1M	5%	1/16W

Ref. No.	Part No.	Description			Remarks
		< CONPOSITION CIRCUIT BLOCK >			
RB501	1-236-425-11	NETWORK, RES 12K			
RB502	1-236-432-11	NETWORK, RES 47K			
RB503	1-236-433-11	NETWORK, RES 56K			
RB504	1-236-436-11	NETWORK, RES 100K			
		< SWITCH >			
S501	1-571-640-11	SWITCH, SLIDE (MIC ATT)			
S502	1-762-823-11	SWITCH, SLIDE (WIND)			
	A-7066-872-A	MD-70 BOARD, COMPLETE			
		**********			
		(Ref.No.9,000 Series)			
	1-662-945-11	FP-495 FLEXIBLE BOARD			
	3-973-165-01	HOLDER, SENSOR			
	3-973-166-01	HOLDER, LED			
	3-973-185-01	ENCODER			
	3-974-419-01	SPACER, SWITCH			
		< CONNECTOR >			
CN001	1-770-701-11	CONNECTOR, FFC/FPC 18P			
CN002	1-770-312-21	CONNECTOR 4P			
		< DIODE >			
D001	8-719-988-42	DIODE GL453			
		< PHOTO INTERUPTER >			
PH001	8-719-801-60	PHOTO TRASISTOR TLP907-OLB			
PH002	8-719-801-60	PHOTO TRASISTOR TLP907-OLB			
		< TRANSFORMER >			
PT001	8-729-907-25	PHOTO TRANSISTOR PT4850F			
PT002	8-729-907-25	PHOTO TRANSISTOR PT4850F			
		< RESISTOR >			
R001	1-216-031-00	METAL CHIP	180	5%	1/10W
		< SWITCH >			
S001	1-570-953-11	SWITCH, PUSH (1 KEY) (C IN)			
S002	1-762-551-11	SWITCH, PUSH (REC PROOF)			
S003	X-3946-684-1	DISK ASSY, ENCODER (MODE SELECT)			
S007	1-570-953-11	SWITCH, PUSH (1 KEY) (C DOWN))			
	A-7072-219-A	MG-16 BOARD, COMPLETE			
		**********			
		(Ref.No.7,000 Series)			
		< CAPACITOR >			
C901	1-135-201-11	TANTALUM CHIP	10uF	20%	4V
C902	1-162-974-11	CERAMIC CHIP	0.01uF		50V
C903	1-162-974-11	CERAMIC CHIP	0.01uF		50V
C904	1-162-974-11	CERAMIC CHIP	0.01uF		50V
C905	1-135-201-11	TANTALUM CHIP	10uF	20%	4V

Ref. No.	Part No.	Description			Remarks
C906	1-162-974-11	CERAMIC CHIP	0.01uF		50V
C907	1-162-974-11	CERAMIC CHIP	0.01uF		50V
C908	1-162-974-11	CERAMIC CHIP	0.01uF		50V
C909	1-135-201-11	TANTALUM CHIP	10uF	20%	4V
C910	1-162-974-11	CERAMIC CHIP	0.01uF		50V
C911	1-162-974-11	CERAMIC CHIP	0.01uF		50V
C912	1-135-201-11	TANTALUM CHIP	10uF	20%	4V
C913	1-162-974-11	CERAMIC CHIP	0.01uF		50V
C914	1-162-974-11	CERAMIC CHIP	0.01uF		50V
C915	1-162-974-11	CERAMIC CHIP	0.01uF		50V
C916	1-135-201-11	TANTALUM CHIP	10uF	20%	4V
C917	1-162-974-11	CERAMIC CHIP	0.01uF		50V
C918	1-162-974-11	CERAMIC CHIP	0.01uF		50V
C919	1-162-974-11	CERAMIC CHIP	0.01uF		50V
C920	1-135-201-11	TANTALUM CHIP	10uF	20%	4V
C921	1-162-974-11	CERAMIC CHIP	0.01uF		50V
C922	1-162-974-11	CERAMIC CHIP	0.01uF		50V
C923	1-135-201-11	TANTALUM CHIP	10uF	20%	4V
C924	1-162-974-11	CERAMIC CHIP	0.01uF		50V
C925	1-162-974-11	CERAMIC CHIP	0.01uF		50V
C926	1-162-974-11	CERAMIC CHIP	0.01uF		50V
		< CONNECTOR >			
* CN901	1-691-549-21	CONNECTOR, BOARD TO BOARD 48P			
		< IC >			
IC901	8-759-327-02	IC CXD2171R-T6			
IC902	8-752-365-06	IC CXK48324R-1			
IC903	8-752-376-25	IC CXK1206ATM-1-T6			
IC904	8-752-374-63	IC CXD2174R			
IC905	8-752-365-06	IC CXK48324R-1			
IC906	8-752-376-25	IC CXK1206ATM-1-T6			
IC907	8-752-375-93	IC CXD2173R			
		< COIL >			
L901	1-414-398-11	INDUCTOR 10uH			
L902	1-414-398-11	INDUCTOR 10uH			
L903	1-414-398-11	INDUCTOR 10uH			
L904	1-414-398-11	INDUCTOR 10uH			
L905	1-414-398-11	INDUCTOR 10uH			
L906	1-414-398-11	INDUCTOR 10uH			
L907	1-414-398-11	INDUCTOR 10uH			
L908	1-414-392-21	INDUCTOR 1uH			
	A-7066-870-A	RS-73 BOARD, COMPLETE			
		**********			
		(Ref.No.1,000 Series)			
	3-973-002-01	CASE (C), RP SHIELD			
		< CAPACITOR >			
C770	1-135-259-11	TANTAL. CHIP	10uF	20%	6.3V
C771	1-162-974-11	CERAMIC CHIP	0.01uF		50V
C772	1-164-156-11	CERAMIC CHIP	0.1uF		25V
C773	1-162-969-11	CERAMIC CHIP	0.0068uF	10%	25V
C774	1-164-156-11	CERAMIC CHIP	0.1uF		25V

Ref. No.	Part No.	Description			Remarks
C775	1-164-156-11	CERAMIC CHIP	0.1uF		25V
C776	1-162-923-11	CERAMIC CHIP	47PF	5%	50V
C777	1-162-923-11	CERAMIC CHIP	47PF	5%	50V
C778	1-162-974-11	CERAMIC CHIP	0.01uF		50V
C779	1-162-974-11	CERAMIC CHIP	0.01uF		50V
C780	1-162-974-11	CERAMIC CHIP	0.01uF		50V
C781	1-162-974-11	CERAMIC CHIP	0.01uF		50V
C782	1-162-974-11	CERAMIC CHIP	0.01uF		50V
C783	1-135-259-11	TANTAL. CHIP	10uF	20%	6.3V
C784	1-162-974-11	CERAMIC CHIP	0.01uF		50V
C785	1-164-156-11	CERAMIC CHIP	0.1uF		25V
C786	1-162-974-11	CERAMIC CHIP	0.01uF		50V
C787	1-135-259-11	TANTAL. CHIP	10uF	20%	6.3V
C788	1-135-091-00	TANTALUM CHIP	1uF	20%	16V
C789	1-162-974-11	CERAMIC CHIP	0.01uF		50V
C791	1-162-974-11	CERAMIC CHIP	0.01uF		50V
C792	1-110-569-11	TANTAL. CHIP	47uF	20%	6.3V
C793	1-164-156-11	CERAMIC CHIP	0.1uF		25V
C794	1-164-156-11	CERAMIC CHIP	0.1uF		25V
C795	1-135-259-11	TANTAL. CHIP	10uF	20%	6.3V
C796	1-162-974-11	CERAMIC CHIP	0.01uF		50V
C797	1-164-156-11	CERAMIC CHIP	0.1uF		25V
C798	1-162-974-11	CERAMIC CHIP	0.01uF		50V
C799	1-164-217-11	CERAMIC CHIP	150PF	5%	50V
C800	1-113-682-11	TANTAL. CHIP	33uF	20%	10V
C801	1-162-974-11	CERAMIC CHIP	0.01uF		50V
C802	1-162-974-11	CERAMIC CHIP	0.01uF		50V
C803	1-164-217-11	CERAMIC CHIP	150PF	5%	50V
C804	1-164-156-11	CERAMIC CHIP	0.1uF		25V
C806	1-164-156-11	CERAMIC CHIP	0.1uF		25V
C809	1-162-974-11	CERAMIC CHIP	0.01uF		50V
C810	1-104-851-11	TANTAL. CHIP	10uF	20%	10V
C811	1-135-145-11	TANTALUM CHIP	0.47uF	10%	35V
C814	1-162-970-11	CERAMIC CHIP	0.01uF	10%	25V
C815	1-162-964-11	CERAMIC CHIP	0.001uF	10%	50V
C816	1-162-964-11	CERAMIC CHIP	0.001uF	10%	50V
C818	1-162-964-11	CERAMIC CHIP	0.001uF	10%	50V
C819	1-162-974-11	CERAMIC CHIP	0.01uF		50V
C821	1-164-156-11	CERAMIC CHIP	0.1uF		25V
C822	1-164-156-11	CERAMIC CHIP	0.1uF		25V
C823	1-164-156-11	CERAMIC CHIP	0.1uF		25V
C824	1-162-974-11	CERAMIC CHIP	0.01uF		50V
C825	1-164-362-11	CERAMIC CHIP	470PF	5%	50V
C826	1-162-974-11	CERAMIC CHIP	0.01uF		50V
C827	1-162-974-11	CERAMIC CHIP	0.01uF		50V
C828	1-162-974-11	CERAMIC CHIP	0.01uF		50V
C829	1-135-201-11	TANTALUM CHIP	10uF	20%	4V
C830	1-164-156-11	CERAMIC CHIP	0.1uF		25V
C831	1-135-259-11	TANTAL. CHIP	10uF	20%	6.3V
C832	1-164-156-11	CERAMIC CHIP	0.1uF		25V
C833	1-162-974-11	CERAMIC CHIP	0.01uF		50V
C834	1-162-974-11	CERAMIC CHIP	0.01uF		50V
C835	1-162-974-11	CERAMIC CHIP	0.01uF		50V
C836	1-162-974-11	CERAMIC CHIP	0.01uF		50V
C837	1-162-974-11	CERAMIC CHIP	0.01uF		50V

Ref. No.	Part No.	Description			Remarks
C838	1-162-913-11	CERAMIC CHIP	8PF	0.5PF	50V
C839	1-162-913-11	CERAMIC CHIP	8PF	0.5PF	50V
C841	1-162-923-11	CERAMIC CHIP	47PF	5%	50V
C842	1-164-156-11	CERAMIC CHIP	0.1uF		25V
C843	1-164-677-11	CERAMIC CHIP	0.033uF	10%	16V
C844	1-164-677-11	CERAMIC CHIP	0.033uF	10%	16V
C845	1-162-964-11	CERAMIC CHIP	0.001uF	10%	50V
C847	1-162-974-11	CERAMIC CHIP	0.01uF		50V
C848	1-104-851-11	TANTAL. CHIP	10uF	20%	10V
C849	1-162-974-11	CERAMIC CHIP	0.01uF		50V
C850	1-162-974-11	CERAMIC CHIP	0.01uF		50V
C853	1-162-974-11	CERAMIC CHIP	0.01uF		50V
C854	1-104-851-11	TANTAL. CHIP	10uF	20%	10V
C855	1-104-851-11	TANTAL. CHIP	10uF	20%	10V
C857	1-162-927-11	CERAMIC CHIP	100PF	5%	50V
C859	1-162-974-11	CERAMIC CHIP	0.01uF		50V
C861	1-162-974-11	CERAMIC CHIP	0.01uF		50V
C862	1-162-974-11	CERAMIC CHIP	0.01uF		50V
C873	1-162-974-11	CERAMIC CHIP	0.01uF		50V
C874	1-162-974-11	CERAMIC CHIP	0.01uF		50V
C875	1-135-259-11	TANTAL. CHIP	10uF	20%	6.3V
C876	1-135-259-11	TANTAL. CHIP	10uF	20%	6.3V
C880	1-162-915-11	CERAMIC CHIP	10PF	0.5PF	50V
C881	1-162-915-11	CERAMIC CHIP	10PF	0.5PF	50V
C882	1-164-156-11	CERAMIC CHIP	0.1uF		25V
C883	1-135-259-11	TANTAL. CHIP	10uF	20%	6.3V
C884	1-164-156-11	CERAMIC CHIP	0.1uF		25V
C885	1-135-259-11	TANTAL. CHIP	10uF	20%	6.3V
C886	1-164-156-11	CERAMIC CHIP	0.1uF		25V
C887	1-162-970-11	CERAMIC CHIP	0.01uF	10%	25V
C888	1-104-851-11	TANTAL. CHIP	10uF	20%	10V
C889	1-164-156-11	CERAMIC CHIP	0.1uF		25V
C890	1-164-156-11	CERAMIC CHIP	0.1uF		25V
C891	1-164-156-11	CERAMIC CHIP	0.1uF		25V
C892	1-164-156-11	CERAMIC CHIP	0.1uF		25V
C893	1-164-156-11	CERAMIC CHIP	0.1uF		25V
C894	1-164-156-11	CERAMIC CHIP	0.1uF		25V
C895	1-135-259-11	TANTAL. CHIP	10uF	20%	6.3V
C896	1-107-686-11	TANTAL. CHIP	4.7uF	20%	16V
C897	1-164-217-11	CERAMIC CHIP	150PF	5%	50V
C898	1-164-217-11	CERAMIC CHIP	150PF	5%	50V
C899	1-164-156-11	CERAMIC CHIP	0.1uF		25V
C900	1-162-974-11	CERAMIC CHIP	0.01uF		50V
C901	1-104-851-11	TANTAL. CHIP	10uF	20%	10V
C902	1-164-227-11	CERAMIC CHIP	0.022uF	10%	25V
C903	1-135-091-00	TANTALUM CHIP	1uF	20%	16V
C904	1-107-826-11	CERAMIC CHIP	0.1uF	10%	16V
C905	1-107-826-11	CERAMIC CHIP	0.1uF	10%	16V
C906	1-164-363-11	CERAMIC CHIP	560PF	5%	50V
C907	1-135-201-11	TANTALUM CHIP	10uF	20%	4V
C908	1-162-966-11	CERAMIC CHIP	0.0022uF	10%	50V
C909	1-162-970-11	CERAMIC CHIP	0.01uF	10%	25V
C910	1-162-970-11	CERAMIC CHIP	0.01uF	10%	25V
C911	1-104-914-11	TANTAL. CHIP	22uF	20%	16V
C912	1-135-259-11	TANTAL. CHIP	10uF	20%	6.3V

Ref. No.	Part No.	Description			Remarks
C913	1-162-966-11	CERAMIC CHIP	0.0022uF	10%	50V
C914	1-162-970-11	CERAMIC CHIP	0.01uF	10%	25V
C915	1-164-156-11	CERAMIC CHIP	0.1uF		25V
C916	1-162-974-11	CERAMIC CHIP	0.01uF		50V
C917	1-162-974-11	CERAMIC CHIP	0.01uF		50V
C918	1-164-156-11	CERAMIC CHIP	0.1uF		25V
C919	1-135-259-11	TANTAL. CHIP	10uF	20%	6.3V
C920	1-164-156-11	CERAMIC CHIP	0.1uF		25V
C921	1-162-969-11	CERAMIC CHIP	0.0068uF	10%	25V
C922	1-107-826-11	CERAMIC CHIP	0.1uF	10%	16V
C923	1-162-964-11	CERAMIC CHIP	0.001uF	10%	50V
C924	1-162-969-11	CERAMIC CHIP	0.0068uF	10%	25V
C925	1-107-826-11	CERAMIC CHIP	0.1uF	10%	16V
C926	1-162-964-11	CERAMIC CHIP	0.001uF	10%	50V
C927	1-162-920-11	CERAMIC CHIP	27PF	5%	50V
C928	1-164-174-11	CERAMIC CHIP	0.0082uF	10%	25V
C929	1-164-174-11	CERAMIC CHIP	0.0082uF	10%	25V
C930	1-164-174-11	CERAMIC CHIP	0.0082uF	10%	25V
C931	1-164-156-11	CERAMIC CHIP	0.1uF		25V
C932	1-165-176-11	CERAMIC CHIP	0.047uF	10%	16V
C933	1-107-686-11	TANTAL. CHIP	4.7uF	20%	16V
C934	1-162-970-11	CERAMIC CHIP	0.01uF	10%	25V
C935	1-164-156-11	CERAMIC CHIP	0.1uF		25V
C936	1-162-970-11	CERAMIC CHIP	0.01uF	10%	25V
C937	1-164-156-11	CERAMIC CHIP	0.1uF		25V
C938	1-162-970-11	CERAMIC CHIP	0.01uF	10%	25V
C940	1-164-156-11	CERAMIC CHIP	0.1uF		25V
C941	1-107-686-11	TANTAL. CHIP	4.7uF	20%	16V
C942	1-104-851-11	TANTAL. CHIP	10uF	20%	10V
C943	1-164-156-11	CERAMIC CHIP	0.1uF		25V
C944	1-107-826-11	CERAMIC CHIP	0.1uF	10%	16V
C945	1-107-826-11	CERAMIC CHIP	0.1uF	10%	16V
C946	1-107-826-11	CERAMIC CHIP	0.1uF	10%	16V
C953	1-164-156-11	CERAMIC CHIP	0.1uF		25V
C955	1-107-826-11	CERAMIC CHIP	0.1uF	10%	16V
C956	1-107-826-11	CERAMIC CHIP	0.1uF	10%	16V
C957	1-107-826-11	CERAMIC CHIP	0.1uF	10%	16V
C958	1-107-826-11	CERAMIC CHIP	0.1uF	10%	16V
C959	1-110-569-11	TANTAL. CHIP	47uF	20%	6.3V
C961	1-107-686-11	TANTAL. CHIP	4.7uF	20%	16V
C962	1-164-156-11	CERAMIC CHIP	0.1uF		25V
C963	1-164-156-11	CERAMIC CHIP	0.1uF		25V
C964	1-164-156-11	CERAMIC CHIP	0.1uF		25V
C965	1-164-156-11	CERAMIC CHIP	0.1uF		25V
C966	1-110-569-11	TANTAL. CHIP	47uF	20%	6.3V
C967	1-164-156-11	CERAMIC CHIP	0.1uF		25V
		< CONNECTOR >			
CN771	1-766-646-21	CONNECTOR, FFC/FPC 10P			
CN772	1-774-024-21	CONNECTOR, FFC/FPC (ZIF) 34P			
CN773	1-774-024-21	CONNECTOR, FFC/FPC (ZIF) 34P			
* CN775	1-691-922-11	CONNECTOR, BOARD TO BOARD 14P			
CN881	1-580-055-21	PIN, CONNECTOR 2P			

Ref. No.	Part No.	Description	Remarks
CN882	1-580-055-21	PIN, CONNECTOR 2P	
CN883	1-766-647-21	CONNECTOR, FFC/FPC 11P	
* CN884	1-770-450-21	CONNECTOR, BOARD TO BOARD 30P	
CN885	1-766-613-21	CONNECTOR, FFC/FPC 36P	
CN886	1-580-055-21	PIN, CONNECTOR 2P	
CN888	1-573-523-21	CONNECTOR, BOARD TO BOARD 16P	
		< DIODE >	
D771	8-719-046-91	DIODE MA2S111	
D772	8-719-046-91	DIODE MA2S111	
D773	8-719-041-39	DIODE KV1470	
D774	8-719-052-27	DIODE 1SS351-TB	
D775	8-719-052-27	DIODE 1SS351-TB	
D776	8-719-027-95	DIODE HSM88WK	
D883	8-719-046-91	DIODE MA2S111	
D884	8-719-421-03	DIODE MA732	
D885	8-719-046-91	DIODE MA2S111	
		< FILTER >	
FL770	1-411-274-21	LINE, LC DELAY (23NS)	
FL771	1-233-343-21	FILTER, LOW PASS	
FL772	1-233-344-21	FILTER, LOW PASS	
FL880	1-233-351-21	FILTER, BAND PASS	
FL881	1-233-350-21	FILTER, BAND PASS	
		< IC >	
IC770	8-759-278-56	IC AK6440HF-E2	
IC771	8-759-064-36	IC MB88346BPFV	
IC772	8-752-371-18	IC CXD2302Q	
IC773	8-752-070-12	IC CXA1762Q	
IC774	8-752-380-06	IC CXD2189AR-T6	
IC775	8-752-070-11	IC CXA1761R	
IC777	8-752-067-87	IC CXA1760Q	
IC880	8-752-874-33	IC CXP912032-018R	
IC881	8-759-165-47	IC MPC1780VFUEB	
IC882	8-759-066-55	IC TA75W393FU	
IC883	8-759-082-60	IC TC7S66FU	
IC884	8-759-327-62	IC TA8482FN-EL	
IC885	8-759-327-00	IC CXA8044Q-T4	
IC886	8-759-337-40	IC NJM2904V(TE2)	
IC887	8-759-337-40	IC NJM2904V(TE2)	
IC888	8-759-335-42	IC CXA1793N-E2	
IC889	8-759-327-66	IC LB1951V-TLM	
		< COIL >	
L770	1-414-398-11	INDUCTOR 10uH	
L772	1-414-398-11	INDUCTOR 10uH	
L773	1-414-398-11	INDUCTOR 10uH	
L774	1-414-398-11	INDUCTOR 10uH	
L776	1-414-398-11	INDUCTOR 10uH	
L777	1-414-398-11	INDUCTOR 0uH	
L779	1-410-738-41	INDUCTOR CHIP 0.56uH	
L780	1-414-398-11	INDUCTOR 10uH	
L781	1-412-963-11	INDUCTOR 100uH	
L782	1-412-963-11	INDUCTOR 100uH	

Ref. No.	Part No.	Description	Remarks
L783	1-414-398-11	INDUCTOR 10uH	
L789	1-414-398-11	INDUCTOR 10uH	
L791	1-414-398-11	INDUCTOR 10uH	
L880	1-414-398-11	INDUCTOR 10uH	
L881	1-412-282-41	INDUCTOR 470uH	
L883	1-414-398-11	INDUCTOR 10uH	
L884	1-414-392-21	INDUCTOR 1uH	
L885	1-414-392-21	INDUCTOR 1uH	
L886	1-414-392-21	INDUCTOR 1uH	
L887	1-414-392-21	INDUCTOR 1uH	
L888	1-414-392-21	INDUCTOR 1uH	
L889	1-414-392-21	INDUCTOR 1uH	
L890	1-414-398-11	INDUCTOR 10uH	
L891	1-414-392-21	INDUCTOR 1uH	
		< IC LINK >	
⚠PS880	1-576-123-21	LINK, IC 800mA	
⚠PS881	1-576-123-21	LINK, IC 800mA	
		< TRANSISTOR >	
Q772	8-729-429-14	TRANSISTOR UN9211	
Q773	8-729-141-48	TRANSISTOR 2SB624-BV345	
Q774	8-729-141-48	TRANSISTOR 2SB624-BV345	
Q775	8-729-429-14	TRANSISTOR UN9211	
Q776	8-729-425-64	TRANSISTOR 2SD2216-Q	
Q777	8-729-425-64	TRANSISTOR 2SD2216-Q	
Q778	8-729-425-64	TRANSISTOR 2SD2216-Q	
Q779	8-729-425-64	TRANSISTOR 2SD2216-Q	
Q784	8-729-425-50	TRANSISTOR 2SB1462-Q	
Q880	8-729-017-61	TRANSISTOR 2SB1581	
Q881	8-729-425-50	TRANSISTOR 2SB1462-Q	
Q882	8-729-427-72	TRANSISTOR XP4501	
Q883	8-729-429-14	TRANSISTOR UN9211	
Q884	8-729-429-14	TRANSISTOR UN9211	
Q885	8-729-425-64	TRANSISTOR 2SD2216-Q	
Q886	8-729-429-14	TRANSISTOR UN9211	
Q887	8-729-429-14	TRANSISTOR UN9211	
Q888	8-729-141-48	TRANSISTOR 2SB624-BV345	
Q890	8-729-425-50	TRANSISTOR 2SB1462-Q	
Q891	8-729-425-64	TRANSISTOR 2SD2216-Q	
Q892	8-729-425-64	TRANSISTOR 2SD2216-Q	
		< RESISTOR >	
R770	1-216-845-11	METAL CHIP 100K 5% 1/16W	
R771	1-216-864-11	METAL CHIP 0 5% 1/16W	
R774	1-216-841-11	METAL CHIP 47K 5% 1/16W	
R776	1-216-818-11	METAL CHIP 560 5% 1/16W	
R777	1-216-812-11	METAL CHIP 180 5% 1/16W	
R778	1-216-864-11	METAL CHIP 0 5% 1/16W	
R779	1-216-835-11	METAL CHIP 15K 5% 1/16W	
R780	1-216-837-11	METAL CHIP 22K 5% 1/16W	
R781	1-216-821-11	METAL CHIP 1K 5% 1/16W	
R782	1-216-833-11	METAL CHIP 10K 5% 1/16W	

Note : The components identified by mark ⚠ or dotted line with mark ⚠ are critical for safety.
Replace only with part number specified.

Ref. No.	Part No.	Description	Remarks
R783	1-216-833-11	METAL CHIP 10K 5% 1/16W	
R784	1-216-833-11	METAL CHIP 10K 5% 1/16W	
R785	1-216-833-11	METAL CHIP 10K 5% 1/16W	
R786	1-216-817-11	METAL CHIP 470 5% 1/16W	
R787	1-202-924-11	METAL GLAZE 240 5% 1/16W	
R788	1-202-924-11	METAL GLAZE 240 5% 1/16W	
R789	1-216-824-11	METAL CHIP 1.8K 5% 1/16W	
R790	1-216-841-11	METAL CHIP 47K 5% 1/16W	
R791	1-216-815-11	METAL CHIP 330 5% 1/16W	
R792	1-216-814-11	METAL CHIP 270 5% 1/16W	
R793	1-216-815-11	METAL CHIP 330 5% 1/16W	
R794	1-216-816-11	METAL CHIP 390 5% 1/16W	
R795	1-216-815-11	METAL CHIP 330 5% 1/16W	
R796	1-216-809-11	METAL CHIP 100 5% 1/16W	
R797	1-216-815-11	METAL CHIP 330 5% 1/16W	
R798	1-216-815-11	METAL CHIP 330 5% 1/16W	
R799	1-216-825-11	METAL CHIP 2.2K 5% 1/16W	
R800	1-216-841-11	METAL CHIP 47K 5% 1/16W	
R801	1-216-841-11	METAL CHIP 47K 5% 1/16W	
R802	1-216-841-11	METAL CHIP 47K 5% 1/16W	
R803	1-216-864-11	METAL CHIP 0 5% 1/16W	
R804	1-216-839-11	METAL CHIP 33K 5% 1/16W	
R805	1-216-864-11	METAL CHIP 0 5% 1/16W	
R806	1-216-821-11	METAL CHIP 1K 5% 1/16W	
R808	1-216-821-11	METAL CHIP 1K 5% 1/16W	
R809	1-216-864-11	METAL CHIP 0 5% 1/16W	
R810	1-216-834-11	METAL CHIP 12K 5% 1/16W	
R811	1-216-834-11	METAL CHIP 12K 5% 1/16W	
R812	1-216-834-11	METAL CHIP 12K 5% 1/16W	
R813	1-216-834-11	METAL CHIP 12K 5% 1/16W	
R814	1-216-853-11	METAL CHIP 470K 5% 1/16W	
R815	1-216-853-11	METAL CHIP 470K 5% 1/16W	
R816	1-216-829-11	METAL CHIP 4.7K 5% 1/16W	
R817	1-216-829-11	METAL CHIP 4.7K 5% 1/16W	
R818	1-216-829-11	METAL CHIP 4.7K 5% 1/16W	
R819	1-216-831-11	METAL CHIP 6.8K 5% 1/16W	
R820	1-216-803-11	METAL CHIP 33 5% 1/16W	
R821	1-216-833-11	METAL CHIP 10K 5% 1/16W	
R822	1-216-834-11	METAL CHIP 12K 5% 1/16W	
R823	1-216-834-11	METAL CHIP 12K 5% 1/16W	
R824	1-216-821-11	METAL CHIP 1K 5% 1/16W	
R825	1-216-835-11	METAL CHIP 15K 5% 1/16W	
R826	1-216-833-11	METAL CHIP 10K 5% 1/16W	
R827	1-216-821-11	METAL CHIP 1K 5% 1/16W	
R828	1-216-835-11	METAL CHIP 15K 5% 1/16W	
R829	1-216-835-11	METAL CHIP 15K 5% 1/16W	
R830	1-216-831-11	METAL CHIP 6.8K 5% 1/16W	
R831	1-216-831-11	METAL CHIP 6.8K 5% 1/16W	
R832	1-216-807-11	METAL CHIP 68 5% 1/16W	
R833	1-216-295-91	CONDUCTOR, CHIP (2012)	
R843	1-216-823-11	METAL CHIP 1.5K 5% 1/16W	
R844	1-216-823-11	METAL CHIP 1.5K 5% 1/16W	
R849	1-216-816-11	METAL CHIP 390 5% 1/16W	
R850	1-216-815-11	METAL CHIP 330 5% 1/16W	
R851	1-216-815-11	METAL CHIP 330 5% 1/16W	

Ref. No.	Part No.	Description	Remarks
R852	1-216-816-11	METAL CHIP 390 5% 1/16W	
R855	1-216-834-11	METAL CHIP 12K 5% 1/16W	
R856	1-216-834-11	METAL CHIP 12K 5% 1/16W	
R858	1-216-816-11	METAL CHIP 390 5% 1/16W	
R861	1-216-864-11	METAL CHIP 0 5% 1/16W	
R862	1-216-864-11	METAL CHIP 0 5% 1/16W	
R880	1-216-821-11	METAL CHIP 1K 5% 1/16W	
R881	1-216-821-11	METAL CHIP 1K 5% 1/16W	
R882	1-216-829-11	METAL CHIP 4.7K 5% 1/16W	
R883	1-216-821-11	METAL CHIP 1K 5% 1/16W	
R885	1-216-857-11	METAL CHIP 1M 5% 1/16W	
R887	1-216-821-11	METAL CHIP 1K 5% 1/16W	
R888	1-216-851-11	METAL CHIP 330K 5% 1/16W	
R889	1-216-841-11	METAL CHIP 47K 5% 1/16W	
R890	1-216-841-11	METAL CHIP 47K 5% 1/16W	
R891	1-216-821-11	METAL CHIP 1K 5% 1/16W	
R893	1-218-878-11	METAL CHIP 20K 0.50% 1/16W	
R894	1-218-871-11	METAL CHIP 10K 0.50% 1/16W	
R895	1-216-841-11	METAL CHIP 47K 5% 1/16W	
R896	1-216-833-11	METAL CHIP 10K 5% 1/16W	
R897	1-218-879-11	METAL CHIP 22K 0.50% 1/16W	
R898	1-218-883-11	METAL CHIP 33K 0.50% 1/16W	
R900	1-218-345-11	METAL GLAZE 9.1K 5% 1/16W	
R901	1-216-835-11	METAL CHIP 15K 5% 1/16W	
R902	1-216-826-11	METAL CHIP 2.7K 5% 1/16W	
R903	1-216-834-11	METAL CHIP 12K 5% 1/16W	
R904	1-216-835-11	METAL CHIP 15K 5% 1/16W	
R905	1-216-825-11	METAL CHIP 2.2K 5% 1/16W	
R906	1-216-841-11	METAL CHIP 47K 5% 1/16W	
R907	1-216-826-11	METAL CHIP 2.7K 5% 1/16W	
R908	1-216-825-11	METAL CHIP 2.2K 5% 1/16W	
R909	1-216-831-11	METAL CHIP 6.8K 5% 1/16W	
R910	1-216-843-11	METAL CHIP 68K 5% 1/16W	
R911	1-216-834-11	METAL CHIP 12K 5% 1/16W	
R912	1-216-831-11	METAL CHIP 6.8K 5% 1/16W	
R913	1-216-815-11	METAL CHIP 330 5% 1/16W	
R914	1-216-833-11	METAL CHIP 10K 5% 1/16W	
R916	1-216-839-11	METAL CHIP 33K 5% 1/16W	
R917	1-218-875-11	METAL CHIP 15K 0.50% 1/16W	
R918	1-218-875-11	METAL CHIP 15K 0.50% 1/16W	
R919	1-216-836-11	METAL CHIP 18K 5% 1/16W	
R920	1-216-833-11	METAL CHIP 10K 5% 1/16W	
R921	1-216-833-11	METAL CHIP 10K 5% 1/16W	
R922	1-216-829-11	METAL CHIP 4.7K 5% 1/16W	
R923	1-216-821-11	METAL CHIP 1K 5% 1/16W	
R924	1-216-837-11	METAL CHIP 22K 5% 1/16W	
R925	1-216-837-11	METAL CHIP 22K 5% 1/16W	
R926	1-216-810-11	METAL CHIP 120 5% 1/16W	
R927	1-216-841-11	METAL CHIP 47K 5% 1/16W	
R930	1-216-833-11	METAL CHIP 10K 5% 1/16W	
R931	1-216-833-11	METAL CHIP 10K 5% 1/16W	
R932	1-216-821-11	METAL CHIP 1K 5% 1/16W	
R933	1-216-821-11	METAL CHIP 1K 5% 1/16W	
R935	1-216-821-11	METAL CHIP 1K 5% 1/16W	
R936	1-216-833-11	METAL CHIP 10K 5% 1/16W	

Ref. No.	Part No.	Description			Remarks
R939	1-218-897-11	METAL CHIP	120K	0.50%	1/16W
R941	1-216-833-11	METAL CHIP	10K	5%	1/16W
R942	1-218-875-11	METAL CHIP	15K	0.50%	1/16W
R943	1-218-895-11	METAL CHIP	100K	0.50%	1/16W
R944	1-216-833-11	METAL CHIP	10K	5%	1/16W
R945	1-216-833-11	METAL CHIP	10K	5%	1/16W
R947	1-216-833-11	METAL CHIP	10K	5%	1/16W
R948	1-216-833-11	METAL CHIP	10K	5%	1/16W
R951	1-216-833-11	METAL CHIP	10K	5%	1/16W
R953	1-218-891-11	METAL CHIP	68K	0.50%	1/16W
R954	1-216-864-11	METAL CHIP	0	5%	1/16W
R955	1-216-864-11	METAL CHIP	0	5%	1/16W
R957	1-216-829-11	METAL CHIP	4.7K	5%	1/16W
R958	1-218-877-11	METAL CHIP	18K	0.50%	1/16W
R959	1-218-873-11	METAL CHIP	12K	0.50%	1/16W
R961	1-216-841-11	METAL CHIP	47K	5%	1/16W
R964	1-217-671-11	METAL CHIP	1	5%	1/10W
R965	1-217-671-11	METAL CHIP	1	5%	1/10W
R966	1-217-671-11	METAL CHIP	1	5%	1/10W
R967	1-217-671-11	METAL CHIP	1	5%	1/10W
R969	1-218-292-11	METAL GLAZE	20K	5%	1/16W
R970	1-216-864-11	METAL CHIP	0	5%	1/16W
R971	1-216-864-11	METAL CHIP	0	5%	1/16W
R972	1-216-825-11	METAL CHIP	2.2K	5%	1/16W
R973	1-216-825-11	METAL CHIP	2.2K	5%	1/16W
R974	1-216-857-11	METAL CHIP	1M	5%	1/16W
R980	1-216-819-11	METAL CHIP	680	5%	1/16W
R981	1-216-835-11	METAL CHIP	15K	5%	1/16W
R982	1-216-818-11	METAL CHIP	560	5%	1/16W
R983	1-216-825-11	METAL CHIP	2.2K	5%	1/16W
R984	1-216-818-11	METAL CHIP	560	5%	1/16W
R985	1-216-825-11	METAL CHIP	2.2K	5%	1/16W
R986	1-216-805-11	METAL CHIP	47	5%	1/16W
R987	1-216-805-11	METAL CHIP	47	5%	1/16W
R988	1-216-821-11	METAL CHIP	1K	5%	1/16W
R989	1-216-821-11	METAL CHIP	1K	5%	1/16W
R990	1-216-837-11	METAL CHIP	22K	5%	1/16W
R991	1-216-821-11	METAL CHIP	1K	5%	1/16W
R992	1-217-671-11	METAL CHIP	1	5%	1/10W
R993	1-217-671-11	METAL CHIP	1	5%	1/10W
R994	1-217-671-11	METAL CHIP	1	5%	1/10W
R995	1-217-671-11	METAL CHIP	1	5%	1/10W
R996	1-216-841-11	METAL CHIP	47K	5%	1/16W
		< CONPOSITION CIRCUIT BLOCK >			
RB880	1-239-389-11	NWTWORK RESISTOR (CHIP) 47K			
RB881	1-236-904-11	NETWORK RESISTOR (CHIP) 1.0K			
RB882	1-236-412-11	NETWORK, RES 1.0K			
RB883	1-236-432-11	NETWORK, RES 47K			
RB884	1-239-389-11	NWTWORK RESISTOR (CHIP) 47K			
RB885	1-236-432-11	NETWORK, RES 47K			
		< VIBRATOR >			
X880	1-760-655-21	VIBRATOR, CRYSTAL 20MHZ			

Ref. No.	Part No.	Description			Remarks
	A-7072-905-A	RT-21 BOARD, COMPLETE			
		**********			
		(Ref.No.5,000 Series)			
		< CAPACITOR >			
C351	1-164-360-11	CERAMIC CHIP	0.1uF		16V
C352	1-104-752-11	TANTAL. CHIP	33uF	20%	6.3V
		< CONNECTOR >			
CN351	1-565-770-11	CONNECTOR, FPC (1.0MM) (ZIF) 6P			
		< DIODE >			
D351	8-719-951-20	DIODE BR1102W			
		< IC >			
IC351	8-749-923-29	IC RS-20E-T			
		< RESISTOR >			
R351	1-216-817-11	METAL CHIP	470	5%	1/16W
R352	1-216-845-11	METAL CHIP	100K	5%	1/16W
R353	1-216-805-11	METAL CHIP	47	5%	1/16W
	A-7072-977-A	SE-56 BOARD, COMPLETE			
		**********			
		< CAPACITOR >			
C801	1-104-908-11	TANTAL. CHIP	47uF	20%	4V
C803	1-104-852-11	TANTAL. CHIP	22uF	20%	10V
C805	1-104-908-11	TANTAL. CHIP	47uF	20%	4V
C806	1-163-037-11	CERAMIC CHIP	0.022uF	10%	25V
C807	1-104-852-11	TANTAL. CHIP	22uF	20%	10V
C808	1-104-851-11	TANTAL. CHIP	10uF	20%	10V
C809	1-164-360-11	CERAMIC CHIP	0.1uF		16V
C810	1-163-809-11	CERAMIC CHIP	0.047uF	10%	25V
C811	1-162-967-11	CERAMIC CHIP	0.0033uF	10%	50V
C812	1-162-974-11	CERAMIC CHIP	0.01uF		50V
C813	1-163-037-11	CERAMIC CHIP	0.022uF	10%	25V
C815	1-162-967-11	CERAMIC CHIP	0.0033uF	10%	50V
C816	1-163-809-11	CERAMIC CHIP	0.047uF	10%	25V
C818	1-128-257-21	ELECT CHIP	33uF	20%	10V
C819	1-128-257-21	ELECT CHIP	33uF	20%	10V
C820	1-162-953-11	CERAMIC CHIP	100PF	5%	50V
C821	1-162-953-11	CERAMIC CHIP	100PF	5%	50V
C822	1-163-037-11	CERAMIC CHIP	0.022uF	10%	25V
C823	1-163-037-11	CERAMIC CHIP	0.022uF	10%	25V
C824	1-164-360-11	CERAMIC CHIP	0.1uF		16V
		< CONNECTOR >			
CN801	1-766-336-21	CONNECTOR, FFC/FPC 6P			
		< IC >			
IC801	8-759-075-66	IC TA75S01F			
IC802	8-759-080-34	IC TA75W01F			
IC803	8-759-234-77	IC TC4S66F			
IC804	8-759-234-77	IC TC4S66F			
IC805	8-759-058-45	IC NJM3403AV			

Ref. No.	Part No.	Description			Remarks
		< RESISTOR >			
R801	1-216-803-11	METAL CHIP	33	5%	1/16W
R802	1-216-837-11	METAL CHIP	22K	5%	1/16W
R803	1-216-837-11	METAL CHIP	22K	5%	1/16W
R804	1-216-803-11	METAL CHIP	33	5%	1/16W
R805	1-216-837-11	METAL CHIP	22K	5%	1/16W
R806	1-216-837-11	METAL CHIP	22K	5%	1/16W
R807	1-216-837-11	METAL CHIP	22K	5%	1/16W
R808	1-216-837-11	METAL CHIP	22K	5%	1/16W
R812	1-216-837-11	METAL CHIP	22K	5%	1/16W
R813	1-216-864-11	METAL CHIP	0	5%	1/16W
R814	1-216-833-11	METAL CHIP	10K	5%	1/16W
R815	1-216-833-11	METAL CHIP	10K	5%	1/16W
R816	1-208-846-11	METAL GLAZE	470K	0.50%	1/10W
R817	1-208-846-11	METAL GLAZE	470K	0.50%	1/10W
R818	1-208-846-11	METAL GLAZE	470K	0.50%	1/10W
R819	1-208-846-11	METAL GLAZE	470K	0.50%	1/10W
R820	1-216-833-11	METAL CHIP	10K	5%	1/16W
R821	1-216-850-11	METAL CHIP	270K	5%	1/16W
R822	1-216-850-11	METAL CHIP	270K	5%	1/16W
R823	1-216-833-11	METAL CHIP	10K	5%	1/16W
R824	1-216-835-11	METAL CHIP	15K	5%	1/16W
R825	1-216-835-11	METAL CHIP	15K	5%	1/16W
		< SENSOR >			
SE801	1-810-725-71	SENSOR, ANGULAR VELOCITY (YAW)			
SE802	1-810-725-81	SENSOR, ANGULAR VELOCITY (PITCH)			
		< THERMISTOR >			
TH801	1-809-361-21	THERMISTOR (2125)			
	A-7072-903-A	SJ-15 BOARD, COMPLETE			
		**********			
		(Ref.No.5,000 Series)			
		< CAPACITOR >			
C801	1-162-964-11	CERAMIC CHIP	0.001uF	10%	50V
C802	1-162-964-11	CERAMIC CHIP	0.001uF	10%	50V
C803	1-162-964-11	CERAMIC CHIP	0.001uF	10%	50V
C804	1-162-964-11	CERAMIC CHIP	0.001uF	10%	50V
C805	1-162-964-11	CERAMIC CHIP	0.001uF	10%	50V
		< CONNECTOR >			
CN801	1-565-770-11	CONNECTOR, FPC (1.0MM) (ZIF) 6P			
		< DIODE >			
D801	8-719-045-87	DIODE MA4Z082WA-(TX).			
D802	8-719-404-49	DIODE MA111			
D803	8-719-045-87	DIODE MA4Z082WA-(TX).			
		< JACK >			
J801	1-568-956-11	JACK, PIN 2P (AUDIO IN)			

Ref. No.	Part No.	Description			Remarks
		< COIL >			
L801	1-414-406-11	INDUCTOR 220uH			
L803	1-414-406-11	INDUCTOR 220uH			
		< RESISTOR >			
R801	1-216-805-11	METAL CHIP	47	5%	1/16W
R802	1-216-805-11	METAL CHIP	47	5%	1/16W
R804	1-216-864-11	METAL CHIP	0	5%	1/16W
		< SWITCH >			
S802	1-570-858-11	SWITCH, SLIDE (AUDIO INPUT SELECT)			
	A-7072-978-A	SW-286 BOARD, COMPLETE			
		**********			
		(Ref.No.4,000 Series)			
		< CONNECTOR >			
* CN850	1-580-756-21	PIN, CONNECTOR 7P			
CN851	1-770-036-11	CONNECTOR, FPC/FFC 5P (IRIS)			
		< RESISTOR >			
R851	1-216-833-11	METAL CHIP	10K	5%	1/16W
		< SWITCH >			
S850	1-570-984-11	SWITCH, TOGGLE (CAMERA/PLAYER)			
S851	1-570-984-11	SWITCH, TOGGLE (POWER)			
S852	1-571-414-11	SWITCH, TOGGLE (AUTO/MANUAL)			
	A-7072-901-A	VF-105 BOARD, COMPLETE			
		**********			
		(Ref.No.1,000 Series)			
		< CAPACITOR >			
C701	1-162-974-11	CERAMIC CHIP	0.01uF		50V
C703	1-162-974-11	CERAMIC CHIP	0.01uF		50V
C704	1-162-974-11	CERAMIC CHIP	0.01uF		50V
		< CONNECTOR >			
CN701	1-569-775-21	PIN, CONNECTOR 5P			
		< JACK >			
J701	1-562-183-00	SOCKET 8P (VIEW FINDER)			
	A-7072-900-A	VK-41P BOARD, COMPLETE (AEP, UK)			
	A-7072-999-A	VK-41P BOARD, COMPLETE (E)			
		**********			
		(Ref.No.4,000 Series)			
		< CONNECTOR >			
CN501	1-691-485-21	CONNECTOR, FFC/FPC 6P			

Ref. No.	Part No.	Description			Remarks
		< DIODE >			
D501	8-719-420-14	DIODE MA8082-M			
D502	8-719-420-14	DIODE MA8082-M			
D503	8-719-420-14	DIODE MA8082-M			
		< COIL >			
L501	1-412-979-21	INDUCTOR 1uH			
		< RESISTOR >			
R501	1-216-826-11	METAL CHIP	2.7K	5%	1/16W
R502	1-216-828-11	METAL CHIP	3.9K	5%	1/16W
R503	1-216-832-11	METAL CHIP	8.2K	5%	1/16W
R505	1-216-826-11	METAL CHIP	2.7K	5%	1/16W
R506	1-216-828-11	METAL CHIP	3.9K	5%	1/16W
R507	1-216-832-11	METAL CHIP	8.2K	5%	1/16W
R508	1-216-838-11	METAL CHIP	27K	5%	1/16W
R509	1-216-826-11	METAL CHIP	2.7K	5%	1/16W
R510	1-216-828-11	METAL CHIP	3.9K	5%	1/16W
R511	1-216-832-11	METAL CHIP	8.2K	5%	1/16W
R512	1-216-838-11	METAL CHIP	27K	5%	1/16W
		< SWITCH >			
S501	1-692-111-11	SWITCH, KEY BOARD (MENU)			
S502	1-692-111-11	SWITCH, KEY BOARD (MENU UP)			
S503	1-692-111-11	SWITCH, KEY BOARD (MENU DOWN)			
S504	1-692-111-11	SWITCH, KEY BOARD (MENU EXECUTE)			
S506	1-692-111-11	SWITCH, KEY BOARD (STOP)			
S507	1-692-111-11	SWITCH, KEY BOARD (REW)			
S508	1-692-111-11	SWITCH, KEY BOARD (PLAY)			
S509	1-692-111-11	SWITCH, KEY BOARD (AUDIO DUB)			
S510	1-572-498-11	SWITCH, SLIDE (REC) (E Model)			
S512	1-692-111-11	SWITCH, KEY BOARD (PAUSE)			
S513	1-692-111-11	SWITCH, KEY BOARD (FF)			
S514	1-692-111-11	SWITCH, KEY BOARD (SLOW)			
S515	1-692-111-11	SWITCH, KEY BOARD (FRAME RVS)			
S516	1-692-111-11	SWITCH, KEY BOARD (FRAME FWD)			

MISCELLANEOUS
****

			Remarks
20	1-777-505-11	CABLE, FLEXIBLE FLAT(FLS-2) 6P	
55	1-777-508-11	CABLE, FLEXIBLE FLAT(FMM-16) 8P	
59	1-537-833-31	TERMINAL BOARD, BATTERY	
106	1-473-866-11	SWITCH BLOCK, CONTROL (FI4520)	
108	1-762-821-11	SWITCH, ROTARY (ENCODER)	
115	1-504-753-11	SPEAKER (2.8CM)	
119	1-801-515-11	DISPLAY PANEL, LIQUID CRYSTAL	
203	1-777-495-11	CABLE, FLEXIBLE FLAT(FRA-1) 34P	
207	1-777-502-11	CABLE, FLEXIBLE FLAT(FAV-1) 6P	
209	1-777-496-11	CABLE, FLEXIBLE FLAT(FJA-1) 15P	
211	1-777-497-11	CABLE, FLEXIBLE FLAT(FJA-2) 28P	
213	1-777-500-11	CABLE, FLEXIBLE FLAT(FAL-1) 20P	
214	1-777-504-11	CABLE, FLEXIBLE FLAT(FAF-2) 40P	
253	1-777-498-11	CABLE, FLEXIBLE FLAT(FCA-4) 24P	
256	1-777-510-11	CABLE, FLEXIBLE FLAT(FCL-2) 30P	
317	1-473-867-11	SWITCH BLOCK, CONTROL (ZK4520)	
319	1-777-507-11	CABLE, FLEXIBLE FLAT(FME-1) 12P	
321	1-777-501-11	CABLE, FLEXIBLE FLAT(FAG-1) 13P	
409	1-777-499-11	CABLE, FLEXIBLE FLAT(FJJ-1) 15P	
410	1-777-509-11	CABLE, FLEXIBLE FLAT(FMJ-2) 10P	
456	1-500-397-11	CORE, FERRITE	
503	1-547-795-21	ZOOM LENS (VCL-5910WA)	
730	1-801-525-11	SENSOR, DEW CONDENSATION	
M901	A-7044-013-A	DRUM ASSY (DEH-09A-R)	
M902	8-835-575-01	MOTOR, DC SCD13A/J-N	
M903	X-3946-702-1	MOTOR ASSY, CAM	
M904	3-709-155-01	MOTOR, FOCUS	
M905	3-709-154-01	MOTOR, ZOOM	
M906	3-709-014-01	MOTOR UNIT, VAP LOCK	

ACCESSORIES & PACKING MATERIALS
****

			Remarks
	1-573-291-11	CONNECTOR, CONVERSION (AEP, UK)	
	1-575-334-11	CORD, CONNECTION (A/V CABLE STEREO)1.5m	
	1-575-335-21	CORD, CONNECTION (S VIDEO CABLE)1.5m	
⚠	1-769-608-11	CORD, POWER	
	1-769-635-21	CORD, CONNECTION (DC CABLE) 2m	
⚠	1-770-019-11	ADAPTOR, CONVERSION PLUG 3P (UK)	
	3-858-185-11	MANUAL,INSTRUCTION (ENGLISH/SPANISH)(AEP, UK)	
	3-858-185-21	MANUAL,INSTRUCTION(GERMAN/ITALIAN)(AEP)	
	3-858-185-31	MANUAL,INSTRUCTION(FRENCH/DUTCH)(AEP)	
	3-858-185-41	MANUAL,INSTRUCTION (SWEDISH/PORTUGUESE)(AEP)	
	3-858-185-51	MANUAL,INSTRUCTION (ENGLISH)(E)	
	3-858-185-61	MANUAL,INSTRUCTION (ARABIC)(E)	
	3-858-185-71	MANUAL,INSTRUCTION (CHINESE)(E)	
*	3-973-018-01	INDIVIDUAL CARTON	
*	3-973-019-01	CUSHION (LOWER)	
*	3-973-063-01	CUSHION, ACC	
	3-973-301-01	BELT (35), SHOULDER	
	3-974-433-01	SHEET, PROTECTION	
	8-917-570-90	REMOTE COMMANDER RMT-807 SET (AEP, UK)	
	8-917-569-90	REMOTE COMMANDER RMT-806 SET (E)	
**	AC-V615	AC POWER ADAPTOR	
***	NP-F730	BATTERY PACK	

NOTE:
** MARK PARTS IS AVAILABLE FOR REPAIR SERVICE.
*** MARK PARTS IS AVAILABLE AS AN OPTIONAL ACCESSORY.

Note : The components identified by mark ⚠ or dotted line with mark ⚠ are critical for safety. Replace only with part number specified.

SECTION 6
ADJUSTMENTS

6-1. CAMERA SECTION ADJUSTMENT

1-1. PREPARATIONS BEFORE ADJUSTMENT

1-1-1. List of service tools

· Oscilloscope · Regulated power supply · Vectorscope · Pattern generator
· Adjustment screw driver · Color monitor · Digital voltmeter

Ref. No.	Name	Parts Code	Usage
J-1	Filter for color temperature correction (C14)	J-6080-058-A	Auto white balance adjustment/check White balance adjustment/check
J-2	ND filter 1.0 ND filter 0.3	J-6080-808-A J-6080-818-A	White balance check White balance check
J-3	Pattern box PTB-450	J-6082-200-A	Camera adjustment in general
J-4	Color chart for pattern box	J-6020-250-A	Camera adjustment in general
J-5	Siemens star chart	J-6080-875-A	For checking the flange back
J-6	Adjustment remote commander (RM-95 upgraded). Note	J-6082-053-B	Camera recorder adjustment in general
J-7	Clear chart	J-6080-621-A	GAIN, AUTO and white balance adjustments
J-8	Extension board (70P, 0.5 mm)	J-6082-321-A	For extension between CB-54P board (CN202) and JC-15P board (CN401) For extension between AU-192 board (CN915) and JC-15P board (CN403) For extension between AU-192 board (CN004) and JC-15P board (CN641)
J-9	Extension board (30P, 0.5 mm)	J-6082-320-A	For extension between DD-75P board (CN003) and RS-73 board (CN884)
J-10	Extension board (48P, 0.8 mm)	J-6082-177-A	For extension between MG-16 board (CN901) and CB-54P board (CN201)
J-11	Extension cable (42P, 0.8 mm)	J-6082-326-A	For extension between CD-160 board (CN201) and CB-54P board (CN003)
J-12	Extension cable (6P, 0.8 mm)	J-6082-241-A	For extension between AU-192 board (CN908) and VK-41P board (CN501)
J-13	Extension cable (30P, 0.5 mm)	J-6082-323-A	For extension between LD-15 board (CN304) and CB-54P board (CN001)
J-14	Extension cable (40P, 0.5 mm)	J-6082-324-A	For extension between JC-15P board (CN502) and DD-75P board (CN001) For extension between CB-54P board (CN002) and DD-75P board (CN002)
J-15	External power adapter	J-6082-325-A	For connection of external DC power supply
J-16	Extension cable (24P, 0.5 mm)	J-6082-270-A	For extension between AU-192 board (CN914) and CB-54P board (CN290)
J-17	CPC jig 2 (14P)	J-6082-140-A	For video block adjustment and view finder adjustment
J-18	Extension cable (13P, 0.8 mm)	J-6082-376-A	For extension between JK-149 board (CN202) and AU-192 board (CN002) For extension between GP-14 board (CN701) and AU-192 board (CN907)
J-19	Extension cable (15P, 0.8 mm)	J-6082-377-A	For extension between JK-149 board (CN201) and JC-15P board (CN643)
J-20	Extension cable (34P, 0.5 mm)	J-6082-375-A	For extension between RS-73 board (CN773) and AU-192 board (CN917) For extension between RS-73 board (CN772) and AU-192 board (CN916)

Note : If the microprocessor IC in the adjusting remote commander is not the new microprocessor (UPD7503G-C56-12), the pages cannot be switched.
In this case, replace with the new microprocessor (8-759-148-35).

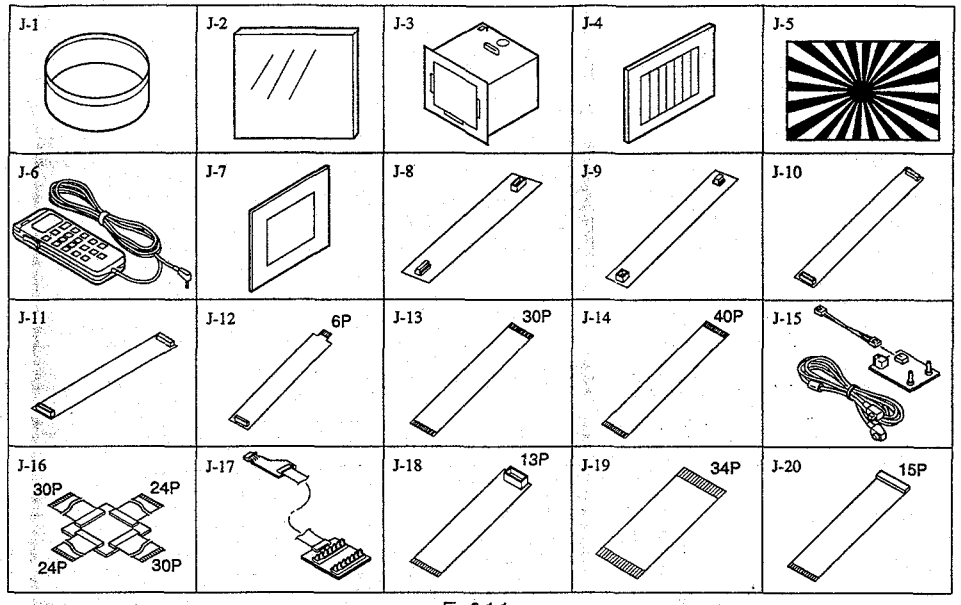

Fig.6-1-1.

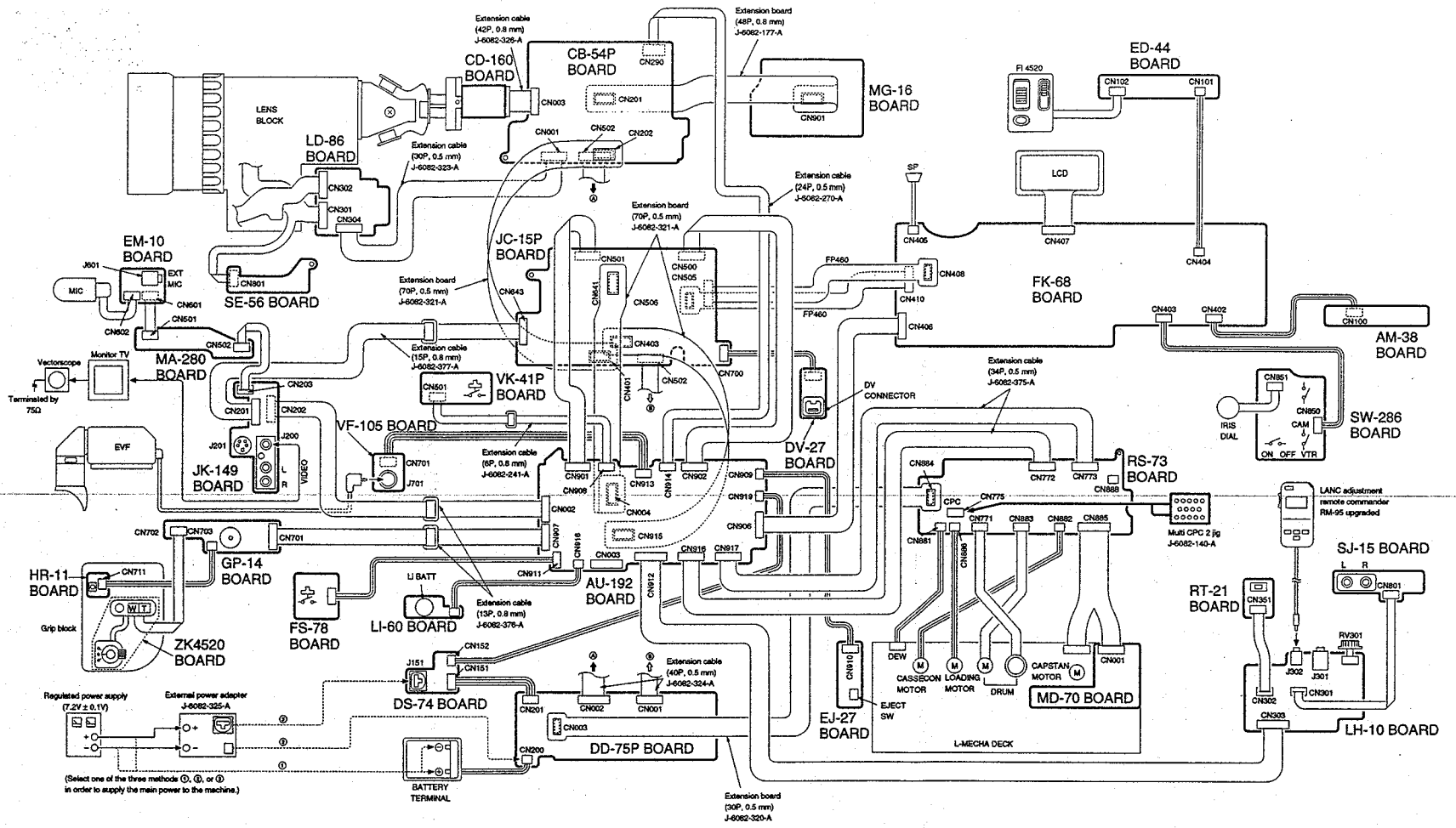
LENS BLOCK
LD-86 BOARD
CD-160 BOARD
CB-54P BOARD
MG-16 BOARD
ED-44 BOARD
FI 4520
LCD
SP
EM-10 BOARD
MIC
EXT MIC
SE-56 BOARD
JC-15P BOARD
FK-68 BOARD
AM-38 BOARD
MA-280 BOARD
Vectorscope
Monitor TV
Terminated by 75Ω
VK-41P BOARD
VF-105 BOARD
EVF
JK-149 BOARD
VIDEO
DV CONNECTOR
DV-27 BOARD
SW-286 BOARD
IRIS DIAL
CAM
ON OFF VTR
RS-73 BOARD
CPC
Multi CPC 2 jig
J-6082-140-A
LANC adjustment remote commander RM-95 upgraded
SJ-15 BOARD
HR-11 BOARD
Grip block
GP-14 BOARD
ZK4520 BOARD
FS-78 BOARD
LI-60 BOARD
LI BATT
AU-192 BOARD
RT-21 BOARD
DS-74 BOARD
DD-75P BOARD
EJ-27 BOARD
EJECT SW
DEW
CASSEICON MOTOR
LOADING MOTOR
DRUM
CAPSTAN MOTOR
MD-70 BOARD
L-MECHA DECK
LH-10 BOARD
Regulated power supply (7.2V ± 0.1V)
External power adapter J-6082-325-A
(Select one of the three methods ①, ②, or ③ in order to supply the main power to the machine.)
BATTERY TERMINAL
Extension cable (42P, 0.8 mm) J-6082-326-A
Extension board (48P, 0.8 mm) J-6082-177-A
Extension cable (30P, 0.5 mm) J-6082-323-A
Extension cable (24P, 0.5 mm) J-6082-270-A
Extension board (70P, 0.5 mm) J-6082-321-A
Extension cable (15P, 0.8 mm) J-6082-377-A
Extension cable (34P, 0.5 mm) J-6082-375-A
Extension cable (6P, 0.8 mm) J-6082-241-A
Extension cable (13P, 0.8 mm) J-6082-376-A
Extension cable (40P, 0.5 mm) J-6082-324-A
Extension board (30P, 0.5 mm) J-6082-320-A

Fig.6-1-1.

1-1-2. Preparations

Note 1 : Refer to "2. Disassembly" for details of how to remove the cabinet and the respective boards.
Note 2 : Removal of the lens block and, CB-54P, JC-15P and AU-192 boards is not necessary if only adjustments are to be made.

1) Connect the adjustment equipment as shown in Fig. 6-1-2.
2) Set the camera and pattern box as shown in Fig. 6-1-3.
3) If the "forced camera power supply ON mode" is established, the camera power supply can be turned ON, even though the CABINET (R) ASSY (POWER, VTR/CAM, FOCUS and IRIS switches are mounted in it) is removed.

   To remove the CABINET (R) ASSY, remove first the following connectors:
   1. FK-68 board CN406 (40P, 0.5 mm)
   2. FK-68 board CN408 (30P, 0.5 mm)
   3. FK-68 board CN410 (30P, 0.5 mm)

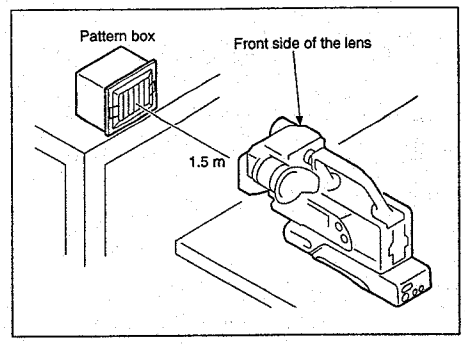

Fig. 6-1-3

(a) How to set the "forced camera power supply ON mode"
While the NOR-ADJ (or HOLD) switch of the adjustment remote commander has been set to the ADJ (or ON) position, apply 7.2 Vdc to the power input terminal. (Refer to section "1-1-4. Adjustment remote commander (RM-95 upgraded)" (See page 6-7.) for operating procedure fo the adjustment remote commander.)
1) Set data: 01 to page : 1, address : 00.
2) Set data: 01 to page : D, address : 03, and press the PAUSE button of the adjustment remote commander.

The camera power supply can be turned ON even thought the CABINET (R) ASSY has been removed using the above steps. After completing adjustments, be sure to exit the "forced power supply ON mode".

(b) How to exit the "forced camera ON mode"
1) Set data : 01 to page : 1, address : 00.
2) Set data : 00 to page : D, address : 03, and press the PAUSE button of the adjusting remote commander.
3) Set data : 00 to page : 1, address : 00.

Note 3 : When performing address setting of the adjustment remote commander, increment or decrement the address of the adjustment remote commander so that the page 9 data must not be set.

1-1-3. Precautions

1. Switch settings

Adjust the switches to the following positions without loading the cassette tape unless otherwise specified.

1) Camera/video power switch (SW-286 board S850) ..... Camera
2) MANUAL/AUTO SWITCH (SW-286 board S852) ..... AUTO
3) AUTO LOCK (AM-38 board S004) ..... ON
4) MONITOR (FK-68 board S415) ..... STEREO
5) SPEAKER (FK-68 board S402) ..... ON
6) REC MODE (FK-68 board S401) 16BIT
7) REC LEVEL L (FK-68 board S406) ..... AUTO
8) REC LEVEL R (FK-68 board S407) ..... AUTO
9) DIGITAL MODE (FK-68 board S417) ..... OVERLAP
10) STEADY SHOT (FK-68 board S404) ..... OFF
11) AUDIO INPUT SELECT (SJ-15 board S802) ..... LINE
12) ND FILTER (LENS BLOCK) ..... OFF

2. Adjustment sequence

Adjust in the given order.

3. Subject

1) Color bar chart (Standard picture frame)
- Adjust the picture frame as shown in Fig. 6-1-4.
- Adjust camera zooming and direction until the camera output waveform on the oscilloscope shown in Fig. 6-1-4 (a) and the color picture on the monitor TV shown in Fig. 6-1-4 (b) have been acquired.
- Maintain this setup until adjustment is complete.

2) White pattern (Standard picture frame)
Remove the color bar chart from the pattern box and adjust the camera setup until the white pattern picture frame is the same size and same position as the color bar chart (the standard picture frame).

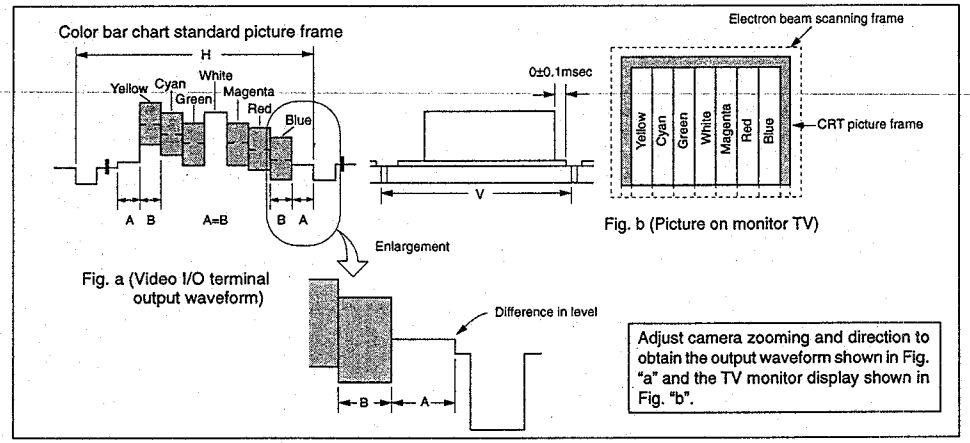

Fig. a (Video I/O terminal output waveform)

Fig. b (Picture on monitor TV)

Fig. 6-1-4

3) Chart for flange back adjustment
Join together a piece of white A0 size paper (1189mm × 841 mm) and a piece of black paper to make the chart shown in Fig. 6-1-5.

Note: Use a non-reflecting and non-glazing vellum paper. The size must be A0 or larger and the joint between the white and black paper must not have any undulations.

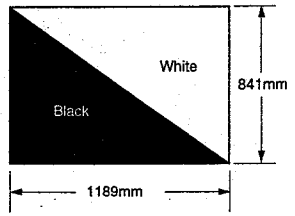

Fig. 6-1-5

1-1-4. Adjustment remote commander (RM-95 upgraded)

To perform adjustment, the adjustment data stored in the non-volatile memory must be rewritten using the adjustment remote commander (RM-95 upgraded).
The adjustment remote commander uses the remote commander signal line (LANC) to interactively communicate with the merchandise. The page, address and up/down command data are sent from the adjustment remote commander to the merchandise. In return, the page, address and data are sent to the adjustment remote commander from the merchandise.

1. Using the adjustment remote commander

1) Connect the adjustment remote commander to the LANC terminal (JK-147 board J101).
2) Set the NOR-ADJ (or HOLD) switch of the adjustment remote commander to the "ADJ" (or ON) (service) position.
If the adjustment remote commander is correctly connected, the adjustment remote commander's LED will show the display as shown in Fig. 6-1-6.
3) Bit value discrimination
It is necessary to discriminate between the bit values with the data displayed on the adjustment remote commander for all following items. Identify whether the bit value is "1" or "0" with the use of the following diagram.

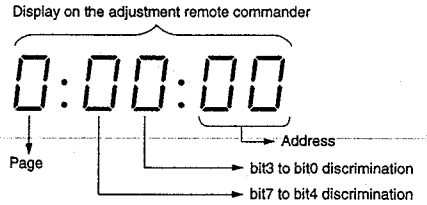

Fig. 6-1-6.

4) The adjustment remote controller is operated as follows:
- Changing the page
The pages increase when the EDIT SEARCH (+) button is pressed and decrease when the EDIT SEARCH (–) button is pressed. Altogether there are 16 pages from page "0" to page "F".
- Changing the address
The address increases when the FF (▶▶) button is pressed, and decreases when the REW (◀◀) button is pressed. Altogether there are 256 addresses from address "00" to address "FF". Some addresses, which are not used during adjustment, do not appear.

Hexadecimal notation	0	1	2	3	4	5	6	7	8	9	A	B	C	D	E	F
LCD display	0	1	2	3	4	5	6	7	8	9	A	b	c	d	E	F
Decimal notation after conversion	0	1	2	3	4	5	6	7	8	9	10	11	12	13	14	15

	Display on the adjustment remote commander	Bit values			
		bit3 or bit7	bit2 or bit6	bit1 or bit5	bit0 or bit4
	0	0	0	0	0
	1	0	0	0	1
	2	0	0	1	0
	3	0	0	1	1
	4	0	1	0	0
	5	0	1	0	1
	6	0	1	1	0
	7	0	1	1	1
Ⓐ	8	1	0	0	0
	9	1	0	0	1
	A (A)	1	0	1	0
	B (b)	1	0	1	1
	C (c)	1	1	0	0
	D (d)	1	1	0	1
Ⓑ	E (E)	1	1	1	0
	F (F)	1	1	1	1

(Example) If "8E" is displayed on the adjustment remote commander, the bit values for bit7 to bit4 are shown in the 'A' column, and the bit values for bit3 to bit0 are shown in the 'B' column.

- Taking note the already-stored adjustment data
The previous adjustment can be erased if the adjustment remote commander is incorrectly handled. To prevent this, it is recommended that all the stored adjustment data be noted down on the attached page F address list.
- Changing the data (Data setting)
The data increases when the PLAY (▶) button is pressed, and decreases when the STOP (■) button is pressed. Altogether there 256 data from data "00" to data "FF".
- Storing the data
Press the PAUSE button to store the adjustment data (page F) into the non-volatile memory.
(If the PAUSE button is not pressed after completing the adjustment, the new adjustment data will not be stored in the non-volatile memory.)

5) After completing all adjustments, turn off the main power supply (7.2 V) once. This releases the adjustment mode (all modes except for page F).

[Sequence of Service Models Using the Adjustment Remote Commander]

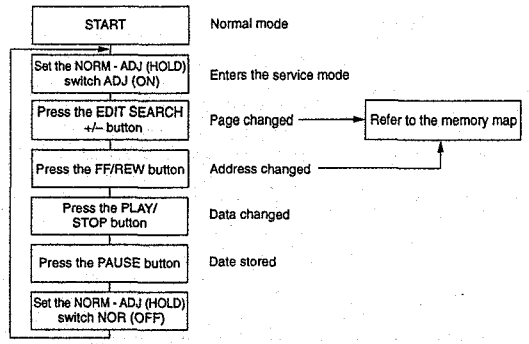

Command Name	Command Function	Normal LANC Command
Page Up	Page + 1	Edit Search +
Page Down	Page – 1	Edit Search –
Direct Page Set	Sets the specified page	Event Clear
Address Up	Address + 1	Fast Forward
Address Down	Address – 1	Rewind
Data Up	Data + 1	Play Back
Data Down	Data – 1	Stop
Store	Stores data in the EE PROM.	Pause

2. Precautions when using the adjustment remote commander

Mishandling of the adjustment remote commander may erase the correct adjustment data which has already been stored in the memory. To prevent this, it is recommended that all adjustment data is noted down on the attached page F address list before starting adjustments in addition to all new adjustment data after the completion of each adjustment step.

1-1-5. Page F address list

Note 1 : The initial value of the adjustment data is the data immediately after execution of Pages E and F data initialization, and Page F data modification. They are different from the value after all adjustments are executed.

Note 2 : When the arrow mark ← is shown in the memo column of the adjustment data, it indicates that the data of that address is the fixed data (fixed to the initial value).

Address	Adjustment Data	
	Initial Value	Memo Column
00	BB	←
01	05	←
02	00	
03	95	
04	93	
05	97	
06	82	
07	66	
08	83	
09	B7	
0A	B8	
0B	78	
0C	79	
0D	C5	
0E	21	←
0F	1C	←
10	39	←
11	10	←
12	35	←
13	29	←
14	B8	←
15	80	←
16	FF	←
17	D5	
18	EC	
19	20	
1A	20	
1B	50	←
1C	7F	←
1D	1A	←
1E	19	←
1F	00	←
20	00	←
21	2F	←
22	0E	←
23	27	←
24	10	←
25	B9	←
26	30	←
27	20	←
28	2C	
29	00	
2A	50	

Table 6-1-1 (1).

Address	Adjustment Data	
	Initial Value	Memo Column
2B	00	
2C	00	←
2D	20	←
2E	20	←
2F	02	←
30	A0	
31	6C	
32	F0	←
33	00	←
34	7D	
35	85	
36	10	←
37	10	←
38	00	←
39	00	←
3A	35	←
3B	04	←
3C	30	←
3D	90	←
3E	62	←
3F	47	←
40	7A	←
41	1A	←
42	86	←
43	18	←
44	C9	←
45	A2	←
46	B9	←
47	9F	←
48	8E	←
49	6E	←
4A	81	←
4B	6F	←
4C	78	←
4D	20	←
4E	88	←
4F	67	←
50	5C	←
51	5C	←
52	4D	←
53	20	←
54	50	←
55	5B	←

Table 6-1-1 (2).

Address	Adjustment Data	
	Initial Value	Memo Column
56	3D	←
57	10	←
58	3F	←
59	0A	←
5A	04	←
5B	E0	←
5C	04	←
5D	02	←
5E	20	←
5F	40	←
60	00	←
61	FF	←
62	00	←
63	FF	←
64	00	←
65	FF	←
66	21	←
67	B4	←
68	10	←
69	87	←
6A	00	←
6B	02	←
6C	FE	
6D	00	
6E	00	←
6F	83	←
70	00	←
71	02	←
72	0A	←
73	20	←
74	04	←
75	87	
76	C7	←
77	2C	←
78	A0	←
79	28	←
7A	1B	←
7B	39	←
7C	50	←
7D	5C	←
7E	8C	←
7F	80	←
80	03	←
81	01	←
82	60	←
83	03	←
84	00	←
85	21	←
86	24	←

Table 6-1-1 (3).

Address	Adjustment Data	
	Initial Value	Memo Column
87	10	←
88	1B	←
89	93	←
8A	DC	←
8B	EA	←
8C	AF	←
8D	EE	←
8E	A8	←
8F	1A	←
90	90	←
91	C0	←
92	04	←
93	08	←
94	90	←
95	C0	←
96	B0	←
97	A0	←
98	80	←
99	A0	←
9A	98	←
9B	90	←
9C	70	←
9D	60	←
9E	08	←
9F	5B	←
A0	2F	←
A1	04	←
A2	32	←
A3	79	←
A4	AF	←
A5	2C	←
A6	40	←
A7	07	
A8	5A	
A9	18	
AA	A1	
AB	13	
AC	C8	
AD	00	
AE	00	
AF	0F	
B0	00	
B1	00	←
B2	00	←
B3	47	←
B4	EC	←
B5	82	←
B6	88	←
B7	14	←

Table 6-1-1 (4).

Address	Adjustment Data	
	Initial Value	Memo Column
B8	4E	←
B9	5A	←
BA	62	←
BB	31	←
BC	01	←
BD	05	←
BE	FF	←
BF	44	←
C0	84	←
C1	33	←
C2	02	←
C3	06	←
C4	0A	←
C5	0E	←
C6	01	←
C7	02	←
C8	02	←
C9	01	←
CA	04	←
CB	56	←
CC	50	←
CD	50	←
CE	00	←
CF	66	←
D0	00	←
D1	02	←
D2	61	←
D3	01	←
D4	FA	←
D5	00	←
D6	4F	←
D7	10	←
D8	2F	←
D9	20	←
DA	2E	←
DB	E5	←

Table 6-1-1 (5).

Address	Adjustment Data	
	Initial Value	Memo Column
DC	CC	←
DD	8A	←
DE	C3	←
DF	28	←
E0	80	
E1	80	
E2	00	←
E3	FF	←
E4	7F	←
E5	10	←
E6	00	←
E7	FF	←
E8	7F	←
E9	10	←
EA	00	←
EB	04	←
EC	00	←
ED	08	←
EE	00	←
EF	08	←
F0	80	←
F1	40	←
F2	40	←
F3	80	←
F4	25	←
F5	79	←
F6	80	←
F7	25	←
F8	79	←
F9	06	←
FA	00	
FB	00	
FC	00	←
FD	F0	←
FE	FF	←
FF	FF	←

Table 6-1-1 (6).

1-1-6. Page E address list

Note 1 : The initial value of the adjustment data is the data immediately after execution of Pages E and F data initialization, and Page E data modification. They are different from the value after all adjustments are executed.

Note 2 : When the arrow mark ← is shown in the memo column of the adjustment data, it indicates that the data of that address is the fixed data (fixed to the initial value).

Address	Adjustment Data	
	Initial Value	Memo Column
00		
01	0B	←
02	0B	←
03	03	←
04	03	←
05	D5	
06	EC	
07	20	
08	20	
09	28	←
0A	25	←
0B	00	←
0C	30	←
0D	0F	←
0E	00	←
0F	18	←
10	02	←
11	2D	←
12	00	←
13	00	←
14	00	←
15	00	←
16	00	←
17	00	←

Table 6-1-2 (1).

Address	Adjustment Data	
	Initial Value	Memo Column
18	00	←
19	00	←
1A	00	←
1B	00	←
1C	00	←
1D	00	←
1E	00	←
1F	00	←
20	00	←
21	00	←
22	00	←
23	00	←
24	00	←
25	00	←
26	00	←
27	00	←
28	00	←
29	00	←
2A	00	←
2B	00	←
2C	00	←
2D	00	←
2E	00	←
2F	00	←

Table 6-1-2 (2).

1-2. CAMERA SYSTEM ADJUSTMENTS

1-2-1. Adjustment points when major parts have been replaced

When the CCD imager or lens block is replaced, adjust the items indicated by O in the following table.

	When the CCD imager is replaced	When the lens block is replaced
HALL adjustment		O
Flange back adjustment	O	O
IRIS IN/OUT adjustment	O	O
MAX GAIN adjustment	O	
Color reproduction adjustment	O	
Auto white balance reference data input	O	
Auto white balance adjustment	O	

1-2-2. Power supply voltage check (DD-75P board)

Mode	Camera recording
Subject	Any subject
Measuring Equipment	Digital voltmeter
CAM 3.3 V check	
Measurement Point	CN002 pin ⑳, ㉑ (CL017)
Specification Value	3.20 ± 0.12 Vdc
CAM 5.0 V check	
Measurement Point	CN002 pin ㉕, ㉖ (CL019)
Specification Value	4.90 ± 0.15 Vdc
CAM 5.0 V check	
Measurement Point	CN002 pin ㉗ to ㉙ (CL020)
Specification Value	4.90 ± 0.15 Vdc

Mode	Camera recording
Subject	Any subject
Measuring Equipment	Digital voltmeter
CCD –8.5 V check	
Measurement Point	CN002 pin ㉜ (CL021)
Specification Value	–8.50 ± 0.50 Vdc
CCD 15 V check	
Measurement Point	CN002 pin ㉝, ㉞ (CL022)
Specification Value	15.00 ± 0.50 Vdc
VAP 5.0 V check	
Measurement Point	CN002 pin ㊲ (CL024)
Specification Value	5.00 ± 0.15 Vdc
CAM MT 5.0 V check	
Measurement Point	CN002 pin ㊳ (CL025)
Specification Value	5.00 ± 0.15 Vdc

DD-75P board (Side A)

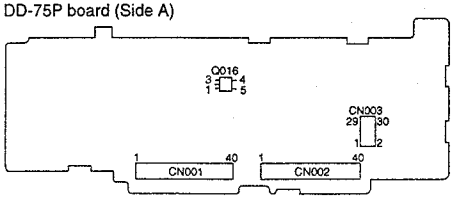

Fig. 6-1-7

1-2-3. Initialization of Pages E and F data

Note 1 : Execute the initialization of pages E and F only when the non-volatile memory (CB-54P board IC007 EE PROM) is replaced.
Note 2 : If the pages E and F data has been initialized, all adjustment items of the camera section must be executed again.

Initializing procedure:

Order	Page	Address	Data	Procedure
1				Turn OFF and ON the main power supply. (Preparation)
2	6	00	01	After setting the data, press the PAUSE button.
3	6	01	2F	After setting the data, press the PAUSE button. (Execution of pages E and F data initialization. Data of the pages E and F address are initialized.)
4	6	11		Confirm that the data is 01.
5	6	11	00	After setting the data, press the PAUSE button.

Works required after initialization

Order	Page	Address	Data	Procedure
1	6	01	00	After setting the data, Press the PAUSE button. (End)
2				Perform the next item "5. Pages E and F Data Modifications", then execute all adjustment items of the camera section.

1-2-4. Modification of Page F data

If the E and F page data has been initialized, change the data as shown in the table on the right by manual input.
Note 1 : Before changing the data, set data : 01 to page : 6, address: 00.
Note 2 : To write in the non-volatile memory (EEPROM) after changing the data, press the PAUSE button of the adjusting remote commander each time to set the new data.
Note 3 : After changing the data, set data : 00 to page : 6, address : 00. Also perform Camera System Adjustments , Servo System Adjustments, Video System Adjustments, and Audio System Adjustments.

Address	Data	Address	Data
01	05	6F	83
1F	00	71	02
20	00	79	28
66	21	7A	1B
68	10	85	21
69	87	87	10
		88	1B

Table 6-1-3.

Note 4 : After the above described modification is completed, turn OFF the main power once then back ON.

1-2-5. Modification of Page E data

If the E and F page data has been initialized, change the data as shown in the following table by manual input.
Note 1 : Before changing the data, set data : 01 to page : 6, address : 00.
Note 2 : To write in the non-volatile memory (EEPROM) after changing the data, press the PAUSE button of the adjusting remote commander each time to set the new data.
Note 3 : After changing the data, set data : 00 to page : 6, address : 00. Also perform Camera System Adjustments, Servo System Adjustments, Video System adjustments, and Audio System Adjustments.

Address	Data
11	2D

Table 6-1-4.

Note 4 : After the above described modification is completed, turn OFF the main power once then back ON.

1-2-6. 28MHz crystal oscillator adjustment (CB-54P board)

Purpose : Adjusts 28MHz crystal controlled oscillation for synchronizing clock.
Adjustment error : Loss of synchronization or loss of color.

Subject	Not required
Measurement Point	IC010 pin ㉒ or IC006 pin ⑲
Measuring Instrument	Frequency counter
Adjustment	CT001
Adjustment	
Specification	14187500 ± 43Hz

Adjustment procedure:

Order	Procedure
1	Adjust CT001 until the oscillation frequency satisfies the specification value.

CB-54P board (Side A)

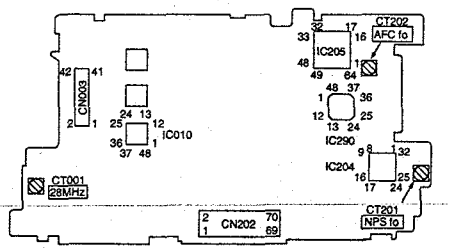

Fig. 6-1-8

1-2-7. Zoom center value preset

Perform this adjustment when ZK-4520 board, or IC501 (mode control) on the JC-15P board, or IC007 (EEPROM) on the CB-54P board is replaced.

Purpose: Optimize the response of the zoom speed

Subject	Not required
Adjustment Page	D
Adjustment Address	39

Note : Fix the lens zoom switch position at a certain subject even though the subject can be any subject.

Adjustment procedure:

Order	Page	Address	Data	Procedure
1	1	00	01	Set the data. (Preparation)
2	2	24		Take reading the data of this address on this page. Take this data as D24.
3	D	39		Set the data D24 to this address and press the PAUSE button.
4	1	00	00	Set the data. (End)

1-2-8. V SUB adjustment

Purpose : Set the V SUB voltage of the CCD imager to the voltage which has been uniquely specified for each imager.

Subject	Not required
Adjustment Page	F
Adjustment Address	03, 04, 05

Related Adjustment
"MAX gain adjustment", "Auto white balance reference data input", "Auto white balance adjustment", "Color reproductively adjustment".

Adjustment method:

Order	Page	Address	Data	Procedure
1	6	00	01	Set the data. (Preparation)
2	F	03		Reading a voltage code of V SUB indicated by R ch CCD imager then input data of a table (Fig.6-1-9).
3	F	03		Press the PAUSE button.
4	F	04		Reading a voltage code of V SUB indicated by G ch CCD imager then input data of a table (Fig.6-1-9).
5	F	04		Press the PAUSE button.
6	F	05		Reading a voltage code of V SUB indicated by B ch CCD imager then input data of a table (Fig.6-1-9).
7	F	05		Press the PAUSE button.
8	6	00	00	Set the data. (End)

V SUB			
Voltage code	Data	Voltage code	Data
E	71	Q	AD
F	77	R	B3
G	7D	S	B9
H	83	T	BF
J	89	U	C4
K	8F	V	CA
L	95	W	D0
M	9B	X	D6
N	A1	Y	DC
P	A7	Z	E2

Table. 6-1-5

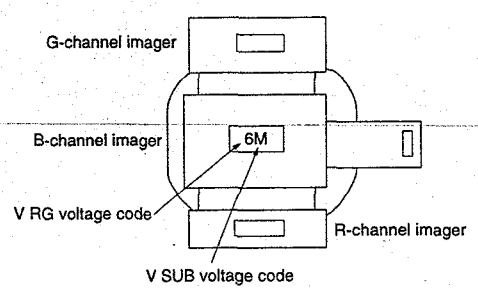

Fig. 6-1-9

Example : When the display is "6M",
Because the V SUB voltage code is "M", the V SUB data becomes "9B".
Because the V RG voltage code is "6", the V RG data becomes "B2".

1-2-9. VRG adjustment

Purpose : Set the V RG voltage of the CCD imager to the voltage which has been uniquely specified for each imager.

Subject	Not required
Adjustment Page	F
Adjustment Address	06, 07, 08

Adjustment Method:

Order	Page	Address	Data	Procedure
1	6	00	01	Set the data. (Preparation)
2	F	06		Reading a voltage code of V SUB indicated by R ch CCD imager then input data of a table (Fig.6-1-9).
3	F	06		Press the PAUSE button.
4	F	07		Reading a voltage code of V SUB indicated by G ch CCD imager then input data of a table (Fig.6-1-9).
5	F	07		Press the PAUSE button.
6	F	08		Reading a voltage code of V SUB indicated by B ch CCD imager then input data of a table (Fig.6-1-9).
7	F	08		Press the PAUSE button.
8	6	00	00	Set the data. (End)

V RG	
Voltage code	Data
1	2F
2	47
3	62
4	7C
5	96
6	B2
7	CD

Table. 6-1-6

1-2-10. HALL adjustment

Purpose : Variation of the HALL element outputs is removed by adjusting amplifier gain and offset. The HALL elements detect the lens iris position.

Adjustment error : Oscillation of lens iris, or incorrect white balance indoor and outdoor.

Subject	Not required
Measurement Point	DDS display on the EVF or monitor
Measuring Instrument	TV, or the page A data display on the adjustment remote commander.
Adjustment Page	F
Adjustment Address	0C 0B
Specification	13 to 14h when iris is opened. (Note 1) 77 to 79h when iris is closed. (Note 2)

Note 1 : Set data : 01 to page : 6, address : 01, and press the PAUSE button of the adjusting remote commander.

Note 2 : Set data : 03 to page : 6, address : 01, and press the PAUSE button of the adjusting remote commander.

Adjustment procedure:

Order	Page	Address	Data	Procedure
1	1	00	01	Set the data. (Preparation 1)
2	D	03	21	After setting the data, press the PAUSE button.
3	6	00	01	Set the data. (Preparation 2)
4	6	02	03	After setting the data, press the PAUSE button.
5	6	01	03	After setting the data, press the PAUSE button.
6	F	0C	40	After setting the data, press the PAUSE button. Read the data appearing on the DDS display (Note 3). The read-out data is W_2.
7	F	0C	30	After setting the data, press the PAUSE button. Read the data appearing on the DDS display (Note 3). The read-out data is W_1.
8	6	01	01	After setting the data, press the PAUSE button.
9	F	0C	30	After setting the data, press the PAUSE button. Read the data appearing on the DDS display (Note 3). The read-out data is K_1.
10	F	0C	40	After setting the data, press the PAUSE button. Read the data appearing on the DDS display (Note 3). The read-out data is K_2.
11				Convert the data W_1, W_2, K_1 and K_2 into the decimal numbers. The result decimal numbers are W_1', W_2', K_1' and K_2'. (Use page 6-37 {How to convert the hexadecimal number to decimal number or "Hexadecimal-Decimal Conversion Table".)
12				$A' = W_2' + K_1' - W_1' - K_2'$ ..... equation 1 $B' = W_1' - K_1'$ ..... equation 2 $X_1' = \frac{1600 + (48 \times A') - (16 \times B')}{A'}$ ..... equation 3
13				Convert the decimal number X_1' to the hexadecimal number to obtain X_1. (Round the number X_1 to count fractions of 0.5 and over as a unit and cut away the rest.)
14	F	0C		Set the data X_1 (obtained at step 13).
15				Press the PAUSE button.
16	F	0B		Change the data until 14 appears on the DDS display.
17				Press the PAUSE button.
18	6	01	03	After setting the data, press the PAUSE button.
19				If the DDS display shows the data in the range from 77 to 79, it indicates the end of adjustment, and proceed to the item "Processing after Adjustments". If it is not, use the DDS display data as W_0 and proceed to step 20 and followings.

Note 3 : Lower two digits of the data which is displayed at the right bottom of he EVF or TV monitor, or the lower 2 digits of the 4-digit display data of page A of the adjustment remote commander.

A : XX : XX → W_2

Order	Page	Address	Data	Procedure
20				Convert the value W_0 to a decimal value to obtain the value W_0'.
21				Calculate the value X_2' from the following equation (decimal calculation). $C' = W_0' - B' - 20$ ..... equation 4 $X_2' = \frac{(100 - B') \times (X_1' - 48) + (48 \times C')}{C'}$ ..... equation 5 (The values X_1' and B' are obtained from the equations 2 and 3 in step 12.)
22				Convert the value X_2' to a hexadecimal number to obtain X_2. (Round the number X_2 to count fractions of 0.5 and over as a unit and cut away the rest.)
23	F	0C		Set the data X_2 (which is the result of calculation in step 22).
24				Press the PAUSE button.
25	F	0B		Change data until 78 appears on the DDS display.
26				Press the PAUSE button.
27	6	01	01	After setting the data, press the PAUSE button.
28				Confirm that the DDS display shows the data in the range from 13 to 15.

Processing after Adjustments:

Order	Page	Address	Data	Procedure
1	6	01	00	After setting the data, press the PAUSE button.
2	6	02	00	After setting the data, press the PAUSE button.
3	6	00	00	Set the data (End 2)
4	D	03	00	After setting the data, press the PAUSE button.
5	1	00	00	Set the data (End 1)

Related adjustments: **"1-2-15. IRIS IN/OUT adjustment"**

1-2-11. Offset check and adjustment

Purpose : Confirm that the AGC OUT voltage is within the operating range of the digital clamp.

Adjustment error : The color reproduction will become poor.

Subject	
Measurement Point	DDS display on the EVF or monitor
Measuring Instrument	TV, or the page A data display on the adjustment remote commander.
Adjustment Page	F
Adjustment Address	0D
Adjustment Address	50 to B0

Note : Set the STEADY SHOT switch (FK-68 board S404) to OFF and the D ZOOM (MENU display) to OFF.

Adjustment procedure:

Order	Page	Address	Data	Procedure
1	1	00	01	Set the data. (Preparation 1)
2	D	03	21	After setting the data, press the PAUSE button.
3	6	00	01	Set the data. (Preparation 2)
4	6	01	07	After setting the data, press the PAUSE button.
5	6	02	14	After setting the data, press the PAUSE button.
6				Confirm that the DDS displayed data satisfies the specification value. If it does not satisfy the specification value, change the data of page: F, address: 0D. Press the PAUSE button after setting the data.
7	6	02	15	After setting the data, press the PAUSE button.
8				Confirm that the DDS displayed data satisfies the specification value. If it does not satisfy the specification value, change the data of page: F, address: 0D. Press the PAUSE button after setting the data.
9	6	02	16	After setting the data, press the PAUSE button.
10				Confirm that the DDS displayed data satisfies the specification value. If it does not satisfy the specification value, change the data of page: F, address: 0D. Press the PAUSE button after setting the data.
11	6	01	05	After setting the data, press the PAUSE button.
12	6	02	14	After setting the data, press the PAUSE button.
13				Confirm that the DDS displayed data satisfies the specification value. If it does not satisfy the specification value, change the data of page: F, address: 0D. Press the PAUSE button after setting the data.
14	6	02	15	After setting the data, press the PAUSE button.
15				Confirm that the DDS displayed data satisfies the specification value. If it does not satisfy the specification value, change the data of page: F, address: 0D. Press the PAUSE button after setting the data.
16	6	02	16	After setting the data, press the PAUSE button.
17				Confirm that the DDS displayed data satisfies the specification value. If it does not satisfy the specification value, change the data of page: F, address: 0D. Press the PAUSE button after setting the data.
18				Repeat the adjustment steps from 4 to 17 until the specification value is satisfied at each step of 6, 8, 10, 13, 15 and 17.

Processing after Adjustments:

Order	Page	Address	Data	Procedure
1	6	01	00	After setting the data, press the PAUSE button.
2	6	02	00	After setting the data, press the PAUSE button.
3	6	00	00	Set the data. (End 2)
4	D	03	00	After setting the data, press the PAUSE button.
5	1	00	00	Set the data. (End 1)

1-2-12. Flange back adjustment and temperature data reading

Purpose : Automatic flange back adjustment of inner focus lens.

Adjustment error : Loss of focus when switched between auto focus and manual focus.

Subject	Chart for flange back adjustment (Placed 1982mm in front of the lens with illumination of 300 ± 50 lux.)
Measurement Point	Confirm the focus on monitor TV
Measuring Instrument	
Adjustment Page	F
Adjustment Address	A7, A8, A9, AA, AB, AC, FA

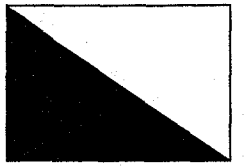

(Chart for flange back adjustment)
(See page 6-6)
Fig.6-1-10.

Note 1 : Set the STEADY SHOT switch (FK-68 board S404) to OFF and the D ZOOM (MENU display) to OFF.

Note 2 : Perform the "temperature data reading" immediately after completion of flange back adjustment without elapse of time.

Adjustment procedure:

Order	Page	Address	Data	Procedure
1				Check that the center of the flange back adjustment chart coincides with that of the display on the monitor at both ends : TELE end and the WIDE end of the zoom lens.
2	6	00	01	Set the data. (Preparation)
3	F	A7 A8 A9 AA AB AC	07 5A 18 A1 13 C8	Confirm data of each address.
4	F	AF		Confirm that the data is 0F. If the data is not 0F, set data 0F and press the PAUSE button.
5	6	21		Confirm that the data is 00.
6	6	01	13	After setting the data, press the PAUSE button.
7	6	01	15	After setting the data, press the PAUSE button. The adjustment data is automatically input to page : F, addresses : A7 to AC.
8	6	21		Confirm that the data is 01.
9	6	21	00	After setting the data, press the PAUSE button.
10	6	11		Confirm that the data is 00.
11	F	FA	00	Confirm that the data is 00. If the data is not 00, set data 00 and press the PAUSE button.
12	6	01	35	After setting the data, press the PAUSE button. The adjustment data is automatically input to page : F, addresses : FA.
13	6	11		Confirm that the data is 01.
14	6	11	00	After setting the data, press the PAUSE button.

Processing after Adjustments:

Order	Page	Address	Data	Procedure
1	6	00	00	Set the data.
2				Turn the main power supply (7.2 V) OFF, then ON. (If this step is not performed, the camera will be out of focus.)

1-2-13. Flange back check

Subject	Siemens star (Placed 2000mm in front of the lens with illumination of about 300 ± 50 lux.)
Measurement Point	Confirm focus on monitor TV
Measuring Instrument	
Specification Value	Picture must have good focus at both TELE and WIDE ends.

Note : Set the STEADY SHOT switch (FK-68 board S404) to OFF and the D ZOOM (MENU display) to OFF.

Adjustment procedure:

Order	Page	Address	Data	Procedure
1				Place a Siemens star at 2m in front of lens.
2				Set the AUTO FOCUS to OFF. (FI4520 block)
3				Decrease illumination to the chart down to a point before noise appears on monitor TV, in order to fully open the IRIS.
4				Shoot the Siemens star at TELE end.
5				Set the AUTO FOCUS to ON. (FI4520 block)
6				Confirm that the image is in focus.
7				Set the AUTO FOCUS to OFF.
8				Shoot the Siemens star at WIDE end.
9				Confirm that the image is in focus.

1-2-14. Picture frame setting

Subject	Color bar chart standard picture frame (1.5m from the front of the lens)
Measurement Point	VIDEO output terminal (Terminated in 75Ω)
Measuring Instrument	Oscilloscope and monitor TV
Specification Value	A=B, C=D, t=0 ± 0.1msec

Note : Set the STEADY SHOT switch (FK-68 board S404) to OFF and the D ZOOM (MENU display) to OFF.

Setting procedure:

Order	Procedure
1	Turn OFF the auto focus.
2	Adjust the focus using the focus knob.
3	Adjust direction and ZOOM of camera so that the picture frame is adjusted as specified by Fig. 6-1-11 and Fig. 6-1-12.
4	Write down markings on the picture frame on the monitor screen. If the "color bar chart standard picture frame" or "white pattern standard picture frame" is specified in the following adjustment items, obtain this picture frame.

Confirm with an oscilloscope

1. Horizontal rate

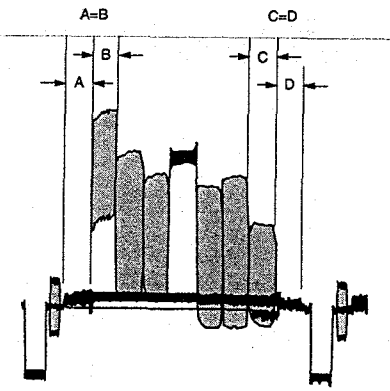

2. Vertical rate

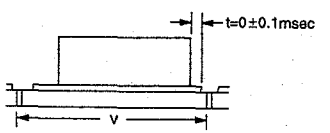

Fig. 6-1-11

Confirm on TV monitor (underscanned display)

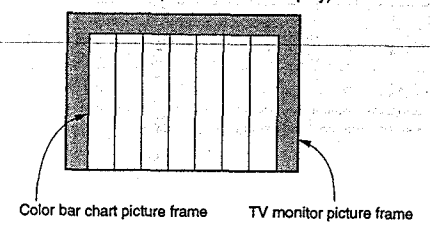

Fig. 6-1-12

1-2-15. Auto white balance reference data input

Purpose : Adjust the reference white balance at 3200°K, and calibrate the camera from white balance variations.

Adjustment error : The pre-set white balance will become poor.

Subject	Clear chart (Color bar standard picture frame)
Measurement Point	VIDEO output terminal (Terminated in 75Ω)
Measuring Instrument	Vectorscope
Adjustment Page	F
Adjustment Address	09, 0A
Specification Value	The white spot comes to the center point of vectorscope. (Note 2)

Note 1 : Set the STEADY SHOT switch (FK-68 board S404) to OFF and the D ZOOM (MENU display) to OFF. (When the burst signal has the specified amplitude.)

Adjustment procedure:

Order	Page	Address	Data	Procedure
1				Turn OFF the main power of the unit then back ON.
2				Shoot a Clear chart with the standard picture frame.
3	6	00	01	Set the data. (Preparation)
4				Set the GAIN control of a vectorscope to maximum.
5	6	01	0F	After setting the data, press the PAUSE button.
6	F	09		Change the data of page: F, address: 09 and the data of address: 0A until the white spot comes to the center point of vectorscope. Press the PAUSE button after each setting of data.
		0A		

Note 2 : Confirm that the diameter of the white spot is 3mm or less under the specified adjustment conditions. (The burst signal must be reduced the standard amplitude.)

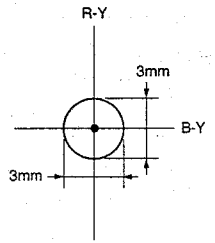

Fig. 6-1-13

Processing after Adjustments:

Order	Page	Address	Data	Procedure
1	6	01	00	After setting the data, press the PAUSE button.
2	6	00	00	Se the data. (End)

1-2-16. IRIS IN/OUT adjustment

Purpose : Measure the light level and write into EE PROM for indoor/outdoor identification in auto white balance.

Adjustment error : Incorrect white balance.

Subject	Clear chart (Color bar standard picture frame)
Measurement Point	DDS display on the EVF or monitor
Measuring Instrument	TV, or the page A data display on the adjustment remote commander.
Adjustment Page	F
Adjustment Address	34, 35

Note : Set the STEADY SHOT switch (FK-68 board S404) to OFF and the D ZOOM (MENU display) to OFF.

Adjustment procedure:

Order	Page	Address	Data	Procedure
1	1	00	01	Set the data. (Preparation 1)
2	D	03	21	After setting the data, press the PAUSE button.
3	6	00	01	Set the data. (Preparation 2)
4	6	15	01	After setting the data, press the PAUSE button.
5	6	02	0E	After setting the data, press the PAUSE button.
6	6	01	0B	After setting the data, press the PAUSE button. Read the data appearing on the DDS display (Note 1), or the display data of page A on the adjustment remote commander (Note 2). The upper 2 digits are D_1 data while the lower 2 digits are D_2.
7				Convert the data D_1 into the decimal numbers. The result decimal number is D_1' (Use page 6-37 (How to convert the hexadecimal number to decimal number "Hexadecimal-Decimal Conversion Table".)
8				Calculate the following equation (decimal number calculation) to obtain D_3'. When $D_2 \geqq D0h$, $D_3' = D_1' - 21$ ..... equation 1. When $D_2 < D0h$, $D_3' = D_1' - 22$ ..... equation 2.
9				Convert the decimal number D_3' to the hexadecimal number to obtain D_3.
10	F	34		Set the data D_3 (obtained at step 9), and press the PAUSE button.
11	6	01	09	After setting the data, press the PAUSE button. Read the data appearing on the DDS display (Note 1), or the display data of page A on the adjustment remote commander (Note 2). The uppers 2 digits are D_4 data while the lower 2 digits are D_5.
12				Convert the data D_4 into the decimal numbers. The result decimal number is D_4' (Use page 6-37 (How to convert the hexadecimal number to decimal number "Hexadecimal-Decimal Conversion Table".)
13				Calculate the following equation (decimal number calculation) to obtain D_6' When $D_5 \geqq F0h$, $D_6' = D_4' - 13$ ..... equation 3. When $D_5 < F0h$, $D_6' = D_4' - 14$ ..... equation 4.
14				Convert the decimal number D_6' to the hexadecimal number to obtain D_6.
15	F	35		Set data D_6 (obtained at step 12), and press the PAUSE button.

Note 1 : The lower 4 digit data shown on the right bottom of EVF or monitor display. If the values in the lower digit change rapidly and cannot read it, record the data on tape once. Play it back in STILL mode and take an average value.

Note 2 : The 4 digit data display on page : A of adjustment remote commander.

A : XX : XX
- XX → Lower 2 digits
- XX → Upper 2 digits

Processing after Adjustments:

Order	Page	Address	Data	Procedure
1	6	01	00	After setting the data, press the PAUSE button.
2	6	02	00	After setting the data, press the PAUSE button.
3	6	15	00	After setting the data, press the PAUSE button.
4	6	00	00	Set the data. (End 2)
5	D	03	00	After setting the data, press the PAUSE button.
6	1	00	00	Set the data. (End 1)

1-2-17. MAX GAIN adjustment

Purpose : Sets the minimum illumination level.
Adjustment error : Normal video level cannot be obtained at low illumination (dark).

Subject	Clear chart (Color bar standard picture frame)
Measurement Point	VIDEO output terminal (Terminated in 75Ω)
Measuring Instrument	Oscilloscope
Adjustment Page	F
Adjustment Address	75
Specification Value	A =420 ± 20 mV

Note : Set the STEADY SHOT switch (FK-68 board S404) to OFF and the D ZOOM (MENU display) to OFF.

Adjustment procedure:

Order	Page	Address	Data	Procedure
1	6	00	01	Set the data. (Preparation)
2	6	15	01	After setting the data, press the PAUSE button.
3	6	01	19	After setting the data, press the PAUSE button.
4	6	02	01	After setting the data, press the PAUSE button.
5	E	12	50	After setting the data, press the PAUSE button.
6	E	13	4F	After setting the data, press the PAUSE button.
7	F	75		Change the data so that the Y signal level (A) satisfies the specification.
8				Press the PAUSE button.

!

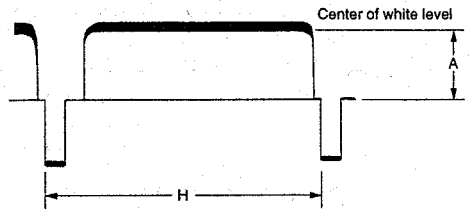

Fig. 6-1-14

Processing after Adjustments:

Order	Page	Address	Data	Procedure
1	6	01	00	After setting the data, press the PAUSE button.
2	6	02	00	After setting the data, press the PAUSE button.
3	6	15	00	After setting the data, press the PAUSE button.
4	E	12	00	After setting the data, press the PAUSE button.
5	E	13	00	After setting the data, press the PAUSE button.
6	6	00	00	Set the data. (End)

1-2-18. White balance adjustment with ND filter correction

Purpose : Adjust the reference white balance when the ND filter is used.
Adjustment error : The white balance when the ND filter is used, will become poor.

Subject	Clear chart (Color bar standard picture frame)
Measurement Point	VIDEO output terminal (Terminated in 75Ω)
Measuring Instrument	Vectorscope
Adjustment Page	F
Adjustment Address	6C, 6D
Specification Value	The white spot comes to the center point of vectorscope. (Note 2)

Note 1 : Set the STEADY SHOT switch (FK-68 board S404) to OFF and the D ZOOM (MENU display) to OFF.

Adjustment procedure:

Order	Page	Address	Data	Procedure
1				Turn the ND filter switch (lens block) to ON.
2	6	00	01	Set the data. (Preparation)
3				Set the GAIN control of vectorscope to the MAX position.
4	6	01	0F	After setting the data, press the PAUSE button.
5	F	6C 6D		Change the data of page : F, address : 6C and the data of address : 6D until the white spot comes to the center point of vectorscope. Press the PAUSE button after each setting of data.

Note 2 : Confirm that the diameter of the white spot is 3 mm or less under the specified adjustment conditions. (The burst signal must be reduced the standard amplitude.)

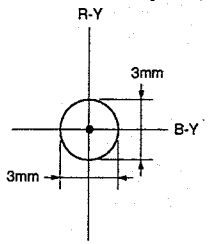

Fig. 6-1-15

Processing after Adjustments:

Order	Page	Address	Data	Procedure
1				Turn the ND filter switch (Lens block) to OFF.
2	6	01	00	After setting the data, press the PAUSE button.
3	6	00	00	Set the data. (End)

1-2-19. Auto white balance adjustment

Purpose : Adjust the outdoor auto white balance output data for the correct value.

Adjustment error : Poor white balance at outdoor.

Subject	Clear chart (Color bar standard picture frame)
Filter	Color temperature correction filter C14
Measurement Point	EVF or DDS display on monitor TV
Measuring Instrument	
Adjustment Page	F
Adjustment Address	30 31
Specification Value	R ratio = 2940h to 29C0h B ratio = 6040h to 60C0h

Note : Make this adjustment after "Auto white balance reference data input" is completed.

Adjustment procedure:

Order	Page	Address	Data	Procedure
1				Put on the color temperature correction filter C14 on the lens.
2	1	00	01	Set the data. (Preparation 1)
3	D	03	21	After setting the data, press the PAUSE button.
4	6	00	01	After setting the data, press the PAUSE button. (Preparation 2)
5	F	5B	D0	After setting the data, press the PAUSE button.
6	6	02	04	After setting the data, press the PAUSE button.
7	F	30		Change data until the R ratio data on the DDS display becomes the specification value.
8				Press the PAUSE button.
9	6	02	05	Set the data.
10	F	31		Change data until the B ratio data on the DDS display becomes the specification value.
11				Press the PAUSE button.

Processing after Adjustments:

Order	Page	Address	Data	Procedure
1	F	5B	E0	After setting the data, press the PAUSE button.
2	6	01	00	After setting the data, press the PAUSE button.
3	6	02	00	After setting the data, press the PAUSE button.
4	6	00	00	Set the data. (End 2)
5	D	03	00	After setting the data, press the PAUSE button.
6	1	00	00	Set the data. (End 1)

1-2-20. Color reproduction adjustment (ND filter OFF)

Purpose : Adjust the three primary color matrix coefficients for correct color reproduction.

Adjustment error : Poor color reproduction.

Subject	Color bar chart standard picture frame
Measurement Point	VIDEO output terminal (Terminated in 75Ω)
Measuring Instrument	Vectorscope
Adjustment Page	F
Adjustment Address	17, 18, 19, 1A
Specification Value	Each spot must be located within the specified color reproduction zone on a vectorscope display.

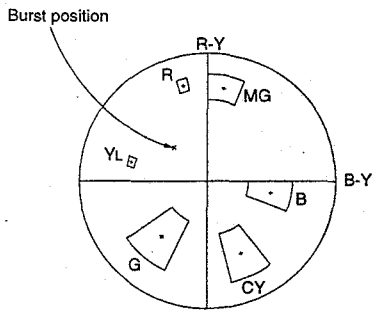

Fig. 6-1-16

Note 1 : Set the STEADY SHOT switch (FK-68 board S404) to OFF and the D ZOOM (MENU display) to OFF.

Adjustment procedure:

Order	Page	Address	Data	Procedure
1	6	00	01	Set the data. (Preparation)
2	6	03	00	After setting the data, press the PAUSE button.
3	6	01	0F	After setting the data, press the PAUSE button.
4	F	17 18 19 1A		Calibrate the GAIN and PHASE controls of vectorscope until the burst spot comes to the specified position of burst on the color reproduction chart. Change the data of page : F, address : 17 to 1A so that the red and yellow spots of the color bar chart are located within the specified color reproduction zone on a vectorscope display. (Note 2)
5				Confirm that the magenta, green, blue and cyan spots of the color bar chart are located within the specified color reproduction zone on a vectorscope display. Confirm that the data of page : F, address : 19 and the data of address : 1A are 7F or less.

Note 2 : Press the PAUSE button after each setting of data. If the PAUSE button is not pressed, new data is not stored in the memory.

Processing after Adjustments:

Order	Page	Address	Data	Procedure
1	6	01	00	After setting the data, press the PAUSE button.
2	6	03	10	After setting the data, press the PAUSE button.
3	6	00	00	Set the data. (End)

Related Adjustments:

"Auto white balance reference data input"

"Auto white balance adjustment"

1-2-21. Color reproduction adjustment (ND filter ON)

Purpose : Adjust the three primary color matrix coefficients for correct color reproduction.

Adjustment error : Poor color reproduction.

Subject	Color bar chart standard picture frame
Measurement Point	VIDEO output terminal (Terminated in 75Ω)
Measuring Instrument	Vectorscope
Adjustment Page	E
Adjustment Address	05, 06, 07, 08
Specification Value	Each spot must be located within the specified color reproduction zone on a vectorscope display.

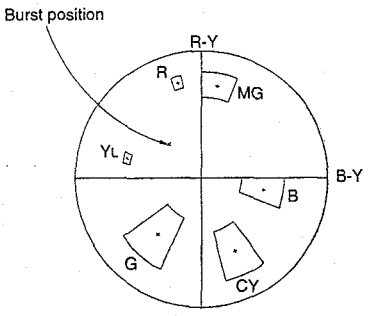

Fig. 6-1-17

Note 1 : Set the STEADY SHOT switch (FK-68 board S404) to OFF and the D ZOOM (MENU display) to OFF.

Adjustment procedure:

Order	Page	Address	Data	Procedure
1				Turn the ND filter switch (Lens block) to ON.
2	6	00	01	Set the data. (Preparation)
3	6	03	00	After setting the data, press the PAUSE button.
4	6	01	0F	After setting the data, press the PAUSE button. (Setting)
5	E	05 06 07 08		Calibrate the GAIN and PHASE controls of vectorscope until the burst spot comes to the specified position of burst on the color reproduction chart. Change the data of page : F, address : 17 to 1A so that the red and yellow spots of the color bar chart are located within the specified color reproduction zone on a vectorscope display. (Note 2)
6				Confirm that the magenta, green, blue and cyan spots of the color bar chart are located within the specified color reproduction zone on a vectorscope display. Confirm that the data of page : F, address : 07 and the data of address : 08 are 7F or less.

Note 2 : Press the PAUSE button after each setting of data. If the PAUSE button is not pressed, new data is not stored in the memory.

Processing after Adjustments:

Order	Page	Address	Data	Procedure
1				Turn the ND filter switch (Lens block) to OFF.
2	6	01	00	After setting the data, press the PAUSE button.
3	6	03	10	After setting the data, press the PAUSE button. (Setting)
4	6	00	00	Set the data. (End)

Related Adjustments:
"Auto white balance reference data input"
"Auto white balance adjustment"

1-2-22. Velocity sensor sensitivity adjustment

The "Velocity Sensor Sensitivity Adjustment" is necessary only when the gyro sensor is replaced. If microprocessors or circuit board is not replaced, this adjustment is not necessary. Make operation check only.

Subject	Pattern A and Pattern B
Measurement point	VIDEO output terminal
Measuring equipment	Oscilloscope or TV monitor
Adjustment page	F
Adjustment address	E1, E0
Specified value	Shoot an arbitrary object at TELE end, and confirm that the STEADY SHOT function works correctly.

Switch setting
1) Steady Shot function switch (FK-68 board S604) ..... ON
2) Digital zoom switch (menu display) ..... OFF

Note 1 : Record the sensitivity data which is indicated on the replacement gyro sensor before installing it. Record not only the sensitivity data but also where (horizontal correction must be installed to the horizontal correction circuit and the vertical correction sensor must be installed to the vertical correction circuit) the replacement sensor is attached. If different type of sensor is used, picture can vibrate vertically or horizontally during camera-shake correction. After replacement, make adjustment as described below.

Note 2 : Caution on gyro sensor
The gyro sensor has the high precision vibrator inside. If the sensor is dropped, balance of the vibrator is lost resulting in faulty operation. Handle the sensor carefully.

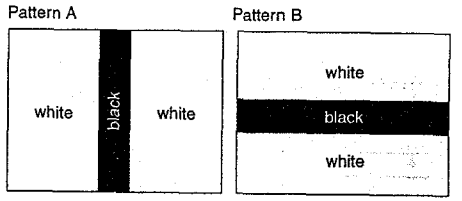

A4 size (297 x 210 mm) A4 size (297 x 210 mm)

Fig. 6-1-18

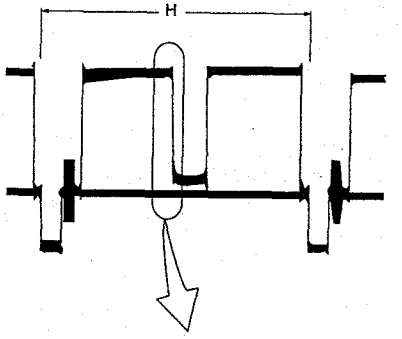

Fig. 6-1-19

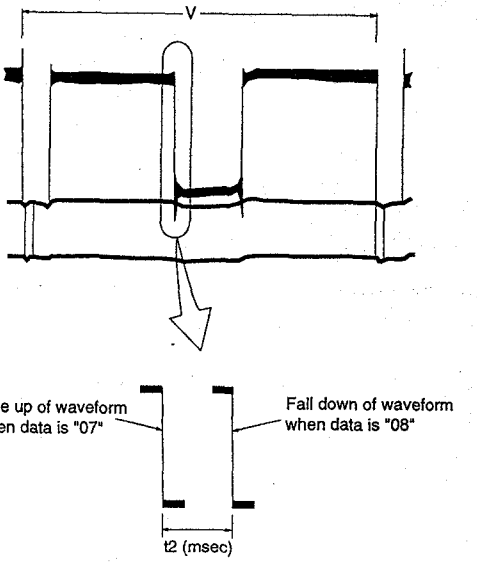

Fig. 6-1-20

Adjustment procedure:

Order	Page	Address	Data	Procedure
1				Shoot the pattern A using TELE end of the zoom. (Place the pattern at the distance of 1.5 m to 2 m far.)
2				Adjust the camera position so that the vertical black stripe comes to the center of display.
3	6	00	01	Set the data.
4	F	EF		Read the data of page : F, address : EF, and record it. Take this data as D_{EF}.
5				Align the fall down of waveform with the vertical scale of an oscilloscope. (Select horizontal rate display of an oscilloscope.)
6	F	EF		Set the data (D_{EF}-1) to page : F, address EF, and press the PAUSE button. At this time, measure the amount of movement t1 (μsec) of the fall down of the waveform. Calculate the following equation (decimal calculation) to obtain the D_{E1}'. $D_{E1}' = \frac{3.94}{t1} \times \frac{1.00}{\text{SE801 sensor sensitivity value}} \times 101$ Note : The sensor sensitivity of SE801 on the SE-56 board is indicated only on the surface of the replacement sensor part. Round the number D_{E1}' to count fractions of 0.5 and over a unit and cut away the rest. Then convert the D_{E1}' value into the hexadecimal number. (Note) The result hexadecimal number is D_{E1}.
7	F	E1		Set the data D_{E1} to this address and press the PAUSE button.
8	F	EF		Set the data D_{EF} which is recorded in step 4 to this address and press the PAUSE button.
9				Shoot the pattern B using TELE end of the zoom.
10				Adjust the camera position so that the vertical black stripe comes to the center of display.
11	F	ED		Read the data of page : F, address : ED, and record it. Take this data as D_{ED}.
12				Align the fall down of waveform with the vertical scale of an oscilloscope. (Select vertical rate display of an oscilloscope.)
13				Set the data (D_{ED}-1) to page : F, address : ED, and press the PAUSE button. At this time, measure the amount of movement t2 (msec) of the fall down of the waveform. Calculate the following equation (decimal calculation) to obtain the D_{E0}'. $D_{E0}' = \frac{1.53}{t2} \times \frac{0.96}{\text{SE802 sensor sensitivity value}} \times 103$ Note : The sensor sensitivity of SE802 on the SE-56 board is indicated only on the surface of the replacement sensor part. Round the number D_{E0}' to count fractions of 0.5 and over a unit and cut away the rest. Then convert the D_{E01}' value into the hexadecimal number. (Note) The result hexadecimal number is D_{E0}.
14	F	E0		Set the data DE0 to this address and press the PAUSE button.
15	F	ED		Set the data DED which is recorded in step 4 to this address and press the PAUSE button.

Note : Refer to page 6-37 ⟨How to convert the hexadecimal number to decimal number) "Hexadecimal-Decimal Conversion Table".

Processing after Adjustments:

Order	Page	Address	Data	Procedure
1	6	00	00	Set the data.
2				Shoot an arbitrary object at TELE end, and confirm that the Steady Shot function works correctly.

1-3. W/B ELECTRONIC VIEWFINDER SYSTEM ADJUSTMENTS

Note : About 4000Vdc is applied to CRT anode and about 200Vdc to the grid. Be careful not to touch them. If hand touches them, there is danger of electric shock.

Preparation :

1. Disconnect a flexible board from J701 on VF-105 board.
2. Connect equipments as follows.

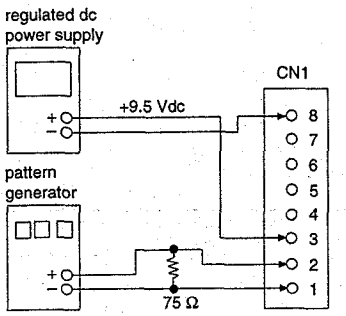

Fig. 6-1-21

Pin No.	Signal Name	Pin No.	Signal Name
1	GND	5	TALLY
2	VF OUT	6	WIDE
3	EVF 9.5V	7	GND
4	N.C.	8	GND

Required signal

1. Monoscope amplitude
   Output amplitude : 1.0Vp-p (75Ω terminated)
   Horizontal resolution : 550 TV lines or more
   Vertical resolution : 350 TV lines or more
2. Dot pattern signal
   Output amplitude : 1.0Vp-p (75Ω terminated)
3. Contrast signal
   Output amplitude : 1.0Vp-p (75Ω terminated)
   fH : 15.625kHz
   fV : 50Hz

[Precaution on the adjustment]

- Be careful, if the H scan size is changed after completion of all adjustments of EVF, the heater voltage is affected and changed.
- If you find that the brightness of a EVF during the H. size adjustment is different from the brightness after the brightness adjustment is completed, the anode voltage is changed. If this phenomenon occurs, perform section "1-3-7. Anode voltage adjustment" and later repeatedly.

EVF MAIN board

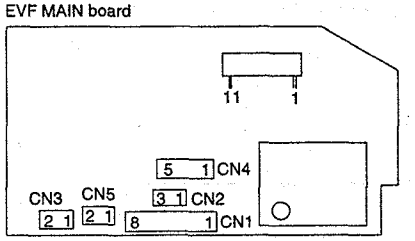

Fig. 6-1-22

1-3-1. Power supply voltage check

Measuring Instrument	Digital voltmeter
EVF 9.5V	
Measurement Point	CN913 Pin ③ (AU-192 board)
Specification Value	9.50 + 0.1Vdc

1-3-2. Horizontal tilt adjustment

Signal	Monoscope signal
Adjustment	DY
Specification Value	± 1°

Adjustment procedure:

Order	Procedure
1	Loosen the nut fixing the DY (deflection yoke).
2	Push the DY to the CRT neck as far as it can go.
3	While observing the EVF screen, rotate the DY until the picture becomes horizontally level.
4	Tighten the nut fixing the DY. (Fig. 6-1-24) (Do not tighten the nut too strongly.)

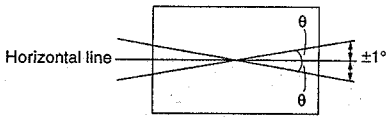

Specified value : Image orientation within ±1° of horizontal line.

Fig. 6-1-23

1-3-3. Focus adjustment

Signal	Monoscope signal
Adjustment	DY focus ring
Specification Value	Horizontal resolution is 350 lines or more.

Adjustment procedure:

Order	Procedure
1	Adjust focus ring for optimum focus. Confirm that the horizontal resolution satisfies the specification.

1-3-4. Centering adjustment

Signal	Monoscope signal
Adjustment	DY
Specification Value	± 2.3%

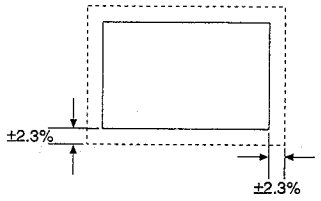

Fig. 6-1-24

Adjustment procedure:

Order	Data procedure
1	Adjust DY centering adjustment ring so that margins at top, bottom, right and left are equal.

Note : The centering position is affected by earth magnetism. Rotate the camera 360 degrees and find the amount of centering change. Make the adjustment to the center of the change.

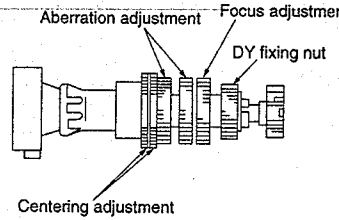

Fig. 6-1-25

Note : When adjustment of each magnet is completed, fix the magnets using the Jet-Melt or other locking paint.

1-3-5. Free run frequency adjustment

Signal	No signal
Measurement Point	H-HOLD : MAIN board CN2 pin ③ V-HOLD : MAIN board CN3 pin ①
Measuring Instrument	Frequency counter
Adjustment	H-HOLD : RV4 V-HOLD : RV5
Specification Value	H-HOLD : 15.63kHz ± 0.05kHz V-HOLD : 45Hz ± 0.5Hz

Adjustment procedure:

Order	Procedure
1	Adjust RV4 until the free run frequency of H-HOLD satisfies the specification value.
2	Adjust RV5 until the free run frequency of V-HOLD satisfies the specification value.

1-3-6. H size adjustment

Signal	Monoscope signal
Measurement Point	CRT screen (visual measurement)
Measuring Instrument	Frequency counter
Adjustment	RV1 (H-SIZE)
Specification Value	110 ± 4%

Adjustment procedure:

Order	Procedure
1	While observing the CRT screen, adjust RV1 until the H size satisfies the specification value.

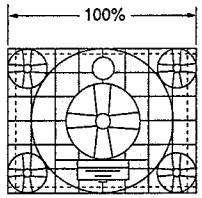

Fig. 6-1-26

1-3-7. Anode voltage adjustment

Signal	Monoscope signal
Measurement Point	Hook terminal of anode lead
Measuring Instrument	High tension measurement meter
Adjustment	RV2
Specification Value	4.05 ± 0.1kV

Adjustment procedure:

Order	Procedure
1	Adjust the anode voltage for the specification value.

1-3-8. Scan size check

Signal	Monoscope signal
Measurement Point	CRT screen
Measuring Instrument	—
Adjustment	RV1
Specification Value	110 ± 4%

Adjustment procedure:

Order	Procedure
1	While observing the CRT screen, confirm that the H SIZE satisfies the specification value. If the H SIZE does not satisfy the specification value, perform "1-3-6. H SIZE adjustment" and "1-3-7. Anode voltage adjustment".

1-3-9. Heater voltage adjustment

Signal	No signal
Measurement Point	Voltage between CN4 pin ④ and CN4 pin ③ of the MAIN board.
Measuring Instrument	AC voltmeter (v.m.s)
Adjustment	RV3 (VH-ADJ)
Specification Value	650 ± 30 mVrms

Adjustment procedure:

Order	Procedure
1	Adjust RV3 until the heater voltage (VH) satisfies the specification value.

EVF
MAIN board (Side A)

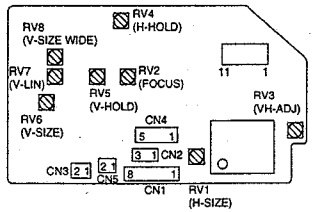

Fig. 6-1-27

1-3-10. V size adjustment

Signal	Monoscope signal
Measurement Point	CRT screen (visual measurement)
Adjustment	RV6 (V-SIZE)
Specification Value	110 ± 4%

Adjustment procedure:

Order	Procedure
1	While observing the CRT screen, adjust RV6 until the vertical size satisfies the specification.

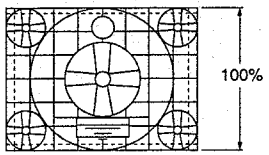

Fig. 6-1-28

1-3-11. V linearity adjustment

Signal	Monoscope signal
Measurement Point	CRT screen (visual measurement)
Adjustment	RV7 (V-LIN)
Specification Value	Round circle of the monoscope signal must show round.

Adjustment procedure:

Order	Procedure
1	While observing the CRT screen, adjust RV7 until the round circle of the monoscope signal shows round.

EVF
MAIN board (Side A)

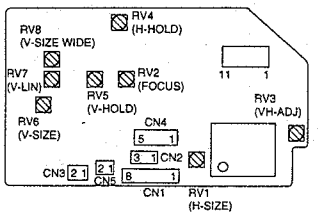

Fig. 6-1-29

1-3-12. Brightness adjustment

Signal	Monoscope signal
Measurement Point	CRT screen
Adjustment	RV10 (SUB-CONTRAST) RV12 (SUB-BRIGHT)
Specification Value	Each step of gray scale signal is displayed clearly.

Note 1. Set the CONTRAST (RV11) of the EVF to the mechanical center position.
2. Set the BRIGHT (RV13) of the EVF to the mechanical center position.

Adjustment procedure:

Order	Procedure
1	Adjust RV12 (dark region) and RV10 (bright region) alternately until each step of gray scale signal is clearly display. (For the brighter region, do not increase brightness to such an extent that the cross-hatch at the center of monoscope signal becomes flared. For the dark region, do not decrease brightness to such an extent that the first step (the darkest step) and the third step cannot be identified.)
2	Adjust RV10 if the brightness of the bright (white) and the dark (black) portions do not satisfy the specification.

1-3-13. 16 : 9 V size adjustment

Signal	Monoscope signal
Measurement Point	CRT screen
Adjustment	RV8 (V-SIZE WIDE)
Specification Value	Round of circle of 16 : 9 mode must show round.

Note : Apply +3Vdc to CN1 pin ⑥ (WIDE).
(CN1 pins ⑦⑧ (GND))

Adjustment procedure:

Order	Procedure
1	Adjust RV8 until the round circle of 16 : 9 mode shows round.

EVF
SUB
board (Side A)

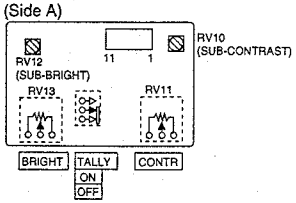

Fig. 6-1-30

Reference : Conversion between the hexadecimal number and decimal number.

In some adjustment items, data appears in hexadecimal numbers on the DDS display or on the adjustment remote commander. Maintenance engineers are expected to convert the displayed hexadecimal numbers to the corresponding decimal numbers using the following conversion table.

Make a required calculation described in each adjustment item. Then re-convert the result of calculation back from the decimal numbers to the corresponding hexadecimal numbers using the following conversion table.

Hexadecimal-decimal Conversion Table

① Upper digit of hexadecimal \ ② Lower digit of hexadecimal	0	1	2	3	4	5	6	7	8	9	A (A)	B (b)	C (c)	D (d)	E (E)	F (F)
0	0	1	2	3	4	5	6	7	8	9	10	11	12	13	14	15
1	16	17	18	19	20	21	22	23	24	25	26	27	28	29	30	31
2	32	33	34	35	36	37	38	39	40	41	42	43	44	45	46	47
3	48	49	50	51	52	53	54	55	56	57	58	59	60	61	62	63
4	64	65	66	67	68	69	70	71	72	73	74	77	76	77	78	79
5	80	81	82	83	84	85	86	87	88	89	90	91	92	93	94	95
6	96	97	98	99	100	101	102	103	104	105	106	107	108	109	110	111
7	112	113	114	115	116	117	118	119	120	121	122	123	124	125	126	127
8	128	129	130	131	132	133	134	135	136	137	138	139	140	141	142	143
9	144	145	146	147	148	149	150	151	152	153	154	155	156	157	158	159
A (A)	160	161	162	163	164	165	166	167	168	169	170	171	172	173	174	175
B (b)	176	177	178	179	180	181	182	183	184	185	186	187	188	189	190	191
C (c)	192	193	194	195	196	197	198	199	200	201	202	203	204	205	206	207
D (d)	208	209	210	211	212	213	214	215	216	217	218	219	220	221	222	223
E (E)	224	225	226	227	228	229	230	231	232	233	234	235	236	237	238	239
F (F)	240	241	242	243	244	245	246	247	248	249	250	251	252	253	254	255

Note : The characters shown in the parenthesis ( ) shown the display on the adjustment remote commander.
(Example) If the DDS display or the adjustment remote commander shows BD (bd);
Because the upper digit of the adjustment number is B (b), and the lower digit is D (d), the meeting point "189" of ① and ② in the above table is the corresponding decimal number.

〈How to convert the decimal number to hexadecimal number〉
The decimal numbers are divided into following three categories. Calculation method is different in three categories respectively.

(1) 0 ~ 255 → 00h ~ FFh
(2) 256 ~ 4095 → 0100h ~ 0FFFh
(3) 4096 ~ 65536 → 1000h ~ FFFFh

If the decimal number fall into the category (1);

1) Divide the decimal number by 16. Result is "A".
2) Take the integer portion of the number "A" as "B".
3) Calculate the equation (A–B) ×16. Result is "C".
4) "B" is the second digit number of the hexadecimal number and "C" is the first digit number of the hexadecimal number. (BC)h

(Example)
If the decimal number is "189";

1) 189÷16=11.8125 ..... (A)
↑
2) (B)
3) (11.8125–11) ×16=13 ..... (C)
4) 189 → (BD)h is obtained.

If the decimal number fall into the category (2);

1) Divide the decimal number by 256. Result is "A".
2) Take the integer portion of the number "A" as "B".
3) Calculate the equation (A-B) ×256. Result is "C".
4) Take the integer portion of the number "C" as "D".
5) Calculate the equation (C-D) ×16. Result is "E".
6) "B" is the third digit number, "D" is the second digit number and "E" is the first digit number of the hexadecimal number. (BDE)h

(Example)
If the decimal number is "2100";

1) 2100÷256=8.203125 ..... (A)
↑
2) (B)
3) (8.203125 – 8) ×256÷16=3.25 ..... (C)
↑
4) (D)
5) (3.25–3) ×16=4 ..... (E)
6) 2100 → (834)h is obtained.

If the decimal number fall into the category (3);

1) Divide the decimal number by 4096. Result is "A".
2) Take the integer portion of the number "A" as "B".
3) Calculate the equation (A–B) ×4096÷256. Result is "C".
4) Take the integer portion of the number "C" as "D".
5) Calculate the equation (C–D) ×256÷16. Result is "E".
6) Take the integer portion of the number "E" as "F".
7) Calculate the equation (E–F) ×16. Result is "G". (Round the number "G" to count fractions of 0.5 and over as a unit and cut away the rest.)
8) "B" is the fourth digit number, "D" third digit number, "F" is the second digit number and "G" is the first digit number of the hexadecimal number. (BDFG)h

(Example)
If the decimal number is "31814";

1) 31814÷4096=7.7670898 ..... (A)
↑
2) (B)
3) (7.7670898–7) ×4096÷256=12.273436 ..... (C)
↑
4) (D)
5) (12.273436–12) ×256÷16=4.374976 ..... (E)
↑
6) (F)
7) (4.374976–4) ×16=5.999616
(Round the number to count fractions of 0.5 and over as a unit and cut away the rest.)
↓
8) 6 ..... (G)
9) 31814 → (7C46)h is obtained.

〈How to convert the hexadecimal number to decimal number〉
If the hexadecimal number is (ABCD)h, the decimal number is calculated by the following equation.
(A×4096) + (B×256) + (C×16) + (D×1)= decimal number

(Example) If the hexadecimal number is "(3BA4)h":
(3×4096) + (11×256) + (10×16) + (4×1)=15268

6-2. MECHANICAL SECTION ADJUSTMENT

Note : Do not remove the sub chassis (drum base) from the mechanism chassis. Correct tape path will be lost and the tape path adjustment cannot be performed even though the sub chassis (drum base) is re-installed to the mechanism chassis.

2-1. PREPARATION FOR CHECK, ADJUSTMENT AND REPLACEMENT OF MECHANISM

Refer to the "DISASSEMBLY" section of the Service Manuals of each model for the procedures of how to remove cabinets, circuit boards, etc.
Reverse the disassembling steps for the procedures of how to re-assemble the parts again, unless otherwise specified.

1-1. Cassette compartment block assembly

1. Removal (Refer to Fig. 6-2-1)

1) Remove the three screws ① (2 × 4.5).
2) Lift up ② cassette compartment block assembly at the drum side a little. Then pull it to the front and remove it in the direction shown by the arrow Ⓐ.

2. Notes on re-assembling

1) Be careful that the ② cassette compartment block assembly should not collide with the MIC terminal.
2) Confirm that the MIC terminal can move up and down after re-assembling.

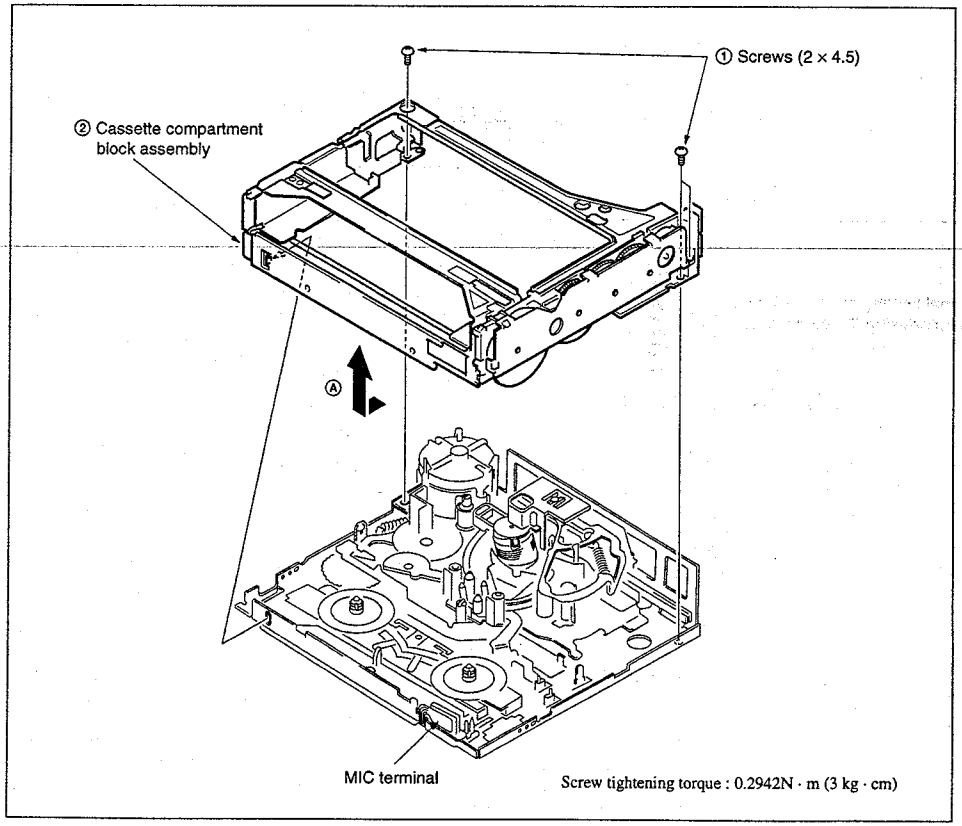

Fig. 6-2-1

1-2. How to perform loading and unloading while the cassette compartment block assembly is removed.

1. Using a regulated power supply

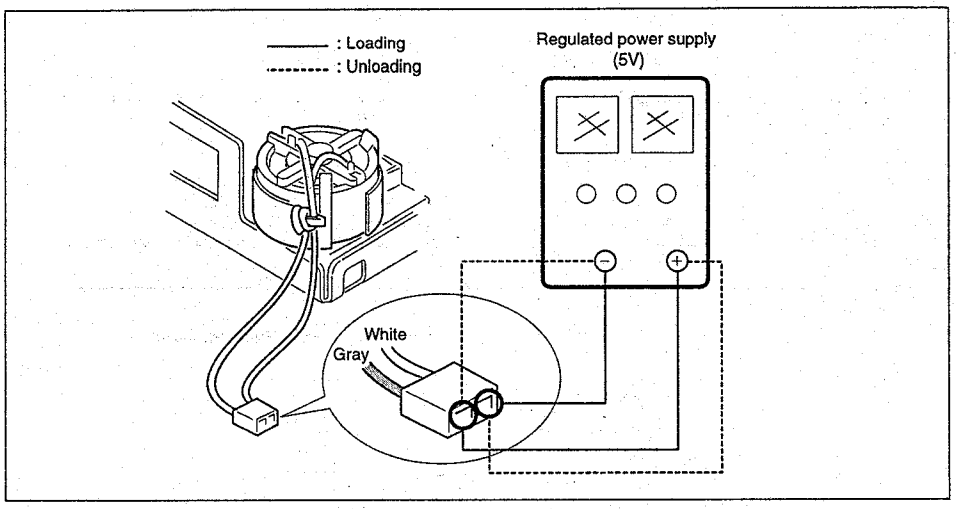

Fig. 6-2-2

2. Manual loading and unloading : After removing the cam motor

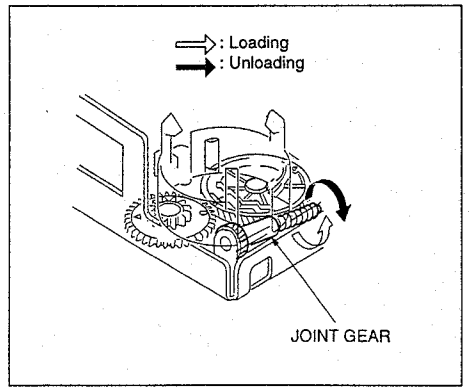

Fig. 6-2-3

2-2. PERIODIC INSPECTION AND MAINTENANCE ITEMS

- Perform the following periodic and maintenance items in order to exert the full functions and performance of the machine and to protect the machine and tape. Also, perform the following maintenance whenever a machine is repaired, regardless of the operating hours of user.

2-1. Cleaning of rotary drum

1) Clean the rotary upper drum assembly by contacting the wiping cloth (Ref. No. J-2) soaked with the cleaning liquid (Ref. No. J-1) with the rotary drum assembly and by rotating the rotary upper drum assembly in counter-clockwise direction by hand slowly.

Note : Never rotate the head drum motor by electric power, or never rotate the upper drum assembly by finger. The head tip is broken if the wiping cloth (or cleaning piece) is moved vertically against the head tip. Do not clean the video head by any method other than what is specified as above.

2-2. Cleaning of tape running path (Refer to Fig. 6-2-4.)

1) Enter the EJECT mode. Clean the tape running path (TG-1, TG-2, TG-3, TG-4, TG-5, TG-6, TG-7, pinch roller and capstan), and the lower drum using a very thin cotton swab (Ref. No. J-3) soaked with cleaning liquid.

Note 1 : Be careful that a very thin cotton swab (Ref. No. J-3) must not contact with oil and grease of the link mechanisms.

Note 2 : Do not clean tape guides with alcohol or a cotton swab soaked with alcohol, except pinch roller. The pinch roller is cleaned with alcohol.

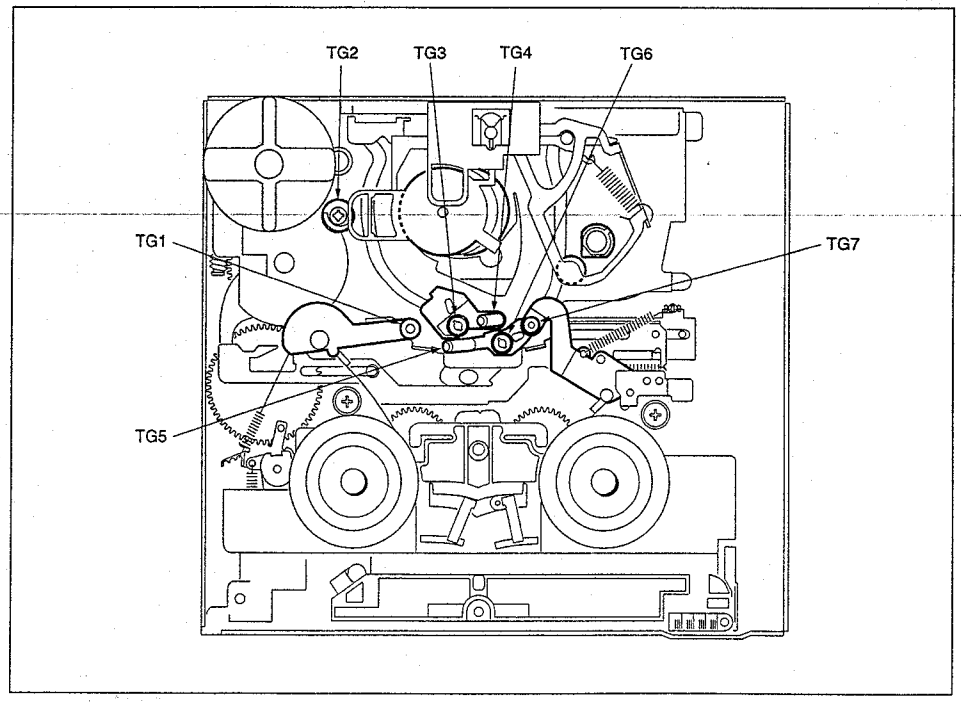

Fig. 6-2-4

2-3. Periodic inspection item

Periodic inspection blocks		Accumulated operating hours (H)										Remarks
		500	1000	1500	2000	2500	3000	3500	4000	4500	5000	
	Cleaning of tape running surface	○	○	○	○	○	○	○	○	○	○	Be careful of staining with oil
	Cleaning and degaussing of rotary drum assembly	○	○	○	○	○	○	○	○	○	○	Be careful of staining with oil
Tape drive system	Timing belt	—	☆	—	☆	—	☆	—	☆	—	☆	3-973-177-01
	Capstan	—	●	—	●	—	●	—	●	—	●	Never stain the tape running surface with oil.
	Gears	—	●	—	●	—	●	—	●	—	●	
	Cam motor assembly	—	☆	—	☆	—	☆	—	☆	—	☆	X-3946-702-1
Performance check	Abnormal sound	☆	☆	☆	☆	☆	☆	☆	☆	☆	☆	
	Measurement of tape hold-back tension	—	☆	—	☆	—	☆	—	☆	—	☆	
	Brake system	—	☆	—	☆	—	☆	—	☆	—	☆	
	FWD and RVS torque measurements	—	☆	—	☆	—	☆	—	☆	—	☆	

○ Cleaning ● Coating with grease ☆ Check

Note 1 : When performing overhaul, replace the parts referring to the above listed items.

Note 2 : Oil

- Be sure to use the specified oil. (If viscosity and other characteristics are different, various troubles can arise.)
  Oil : 7-661-018-18
  (Mitsubishi diamond oil hydro fluid NT-68)
- Use oil which is free from dust or other foreign materials, for the oil lubricating bearings. If oil contains any dust or foreign material, bearings will wear out quickly or burn out.

- A drop of oil is the amount of oil which comes with tip of a sticking having diameter of 2mm.

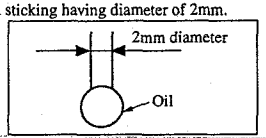

Fig. 6-2-5

2-4. Service jig list

Ref. No.	Name	Sony part code	Jig inscription	Use and others
J-1	Cleaning liquid	9-919-573-01	—	
J-2	Wiping cloth	7-741-900-53	—	
J-3	Very thin cotton swab (made by Japan cotton swab (P752D))	J-2501-023-A	—	
J-4	Small dental mirror (small elliptical mirror)	J-6080-840-A	GD-2038	For tape path adjustment
J-5	Tracking tape (XH2-1ST) Tracking tape (XH2-1SE)	8-967-997-02 8-867-997-03	—	For tape path (top) For tape path (end)
J-6	DV torque cassette	J-6082-373-A	—	
J-7	Reel reference plate	J-6082-380-A	—	For reel height check
J-8	Dummy drum	J-6082-381-A	—	For tape guide adjustment
J-9	Cassette reference plate	J-6082-379-A	—	For tape guide adjustment
J-10	TG2 preset plate (L mechanism)	J-6082-382-A	—	For tape guide adjustment
J-11	TG-3/6 preset plate (L mechanism)	J-6082-383-A	—	For tape guide adjustment
J-12	Torque driver (CCW)	J-9049-330-A	—	
J-13	Tape path driver	J-6082-026-A	—	For tape guide adjustment
J-14	Adjustment remote commander (RN-95 upgraded) * Note	J-6082-053-B	—	
J-15	Mode selector II	J-6082-282-A	—	General adjustments (ROM version 1.40 (J-6082-314-C))
J-16	Neji lock G (1401B) screw locking compound	7-432-114-11	—	
J-17	FWD/BACK TENSION adjustment driver	J-6080-826-A	—	For FWD position and FWD back tension adjustment
J-18	CPC jig-2	J-6082-140-A	—	For tape path
J-19	Mode selector II connection conversion board	J-6082-378-A	—	General adjustments
J-20	FLOIL grease SG-941	7-662-001-39	—	

Other required equipment

- Regulated power supply
- Oscilloscope
- Digital voltmeter

Note : If the microprocessor IC in the adjustment remote commander is not the new microprocessor (μPD7503G-C56-12) the memory pages cannot be switched. In such a case, replace it with new microprocessor (8-759-148-35).

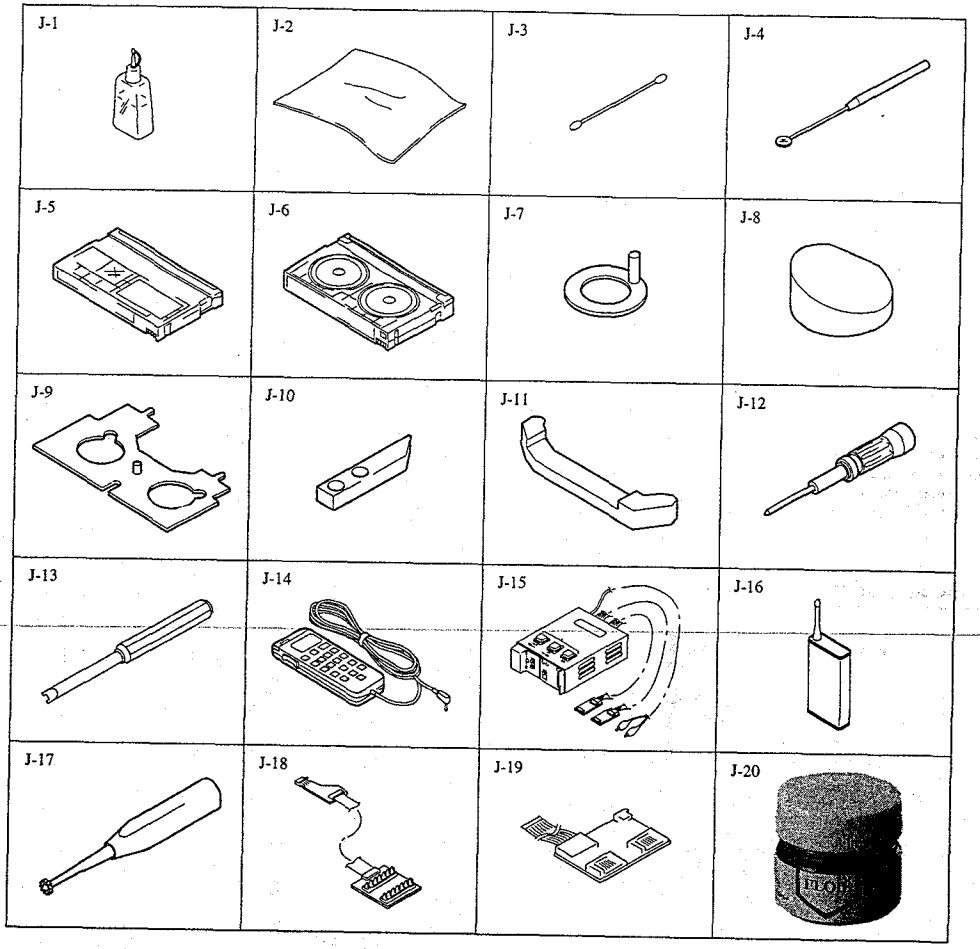

2-5. How to operate the mode selector II

2-5-1. Introduction

The mode selector II is an auxiliary tool for mechanism drive maintenance of various mechanism decks. The mode selector II has the following functions.

1. Manual test

The motors are driven manually in this mode only during the period while the operation switch is turned on. Operator can control the motors freely in this mode.

2. Step test

The motors are driven from the present status that is detected by the sensors, to a different status. A series of movement from a status to a different status can be checked during the status transition.

3. Auto test

The status transition table has already been stored in the memory of the mode selector II. The status transition table indicates the data of mechanism deck in the respective modes. The auto test mode is used to check whether the mechanism performs the normal operation according to the status transition table. A series of movement from a status to another status is checked. If any abnormal status transition is detected, NG message appears and the check operation is stopped.

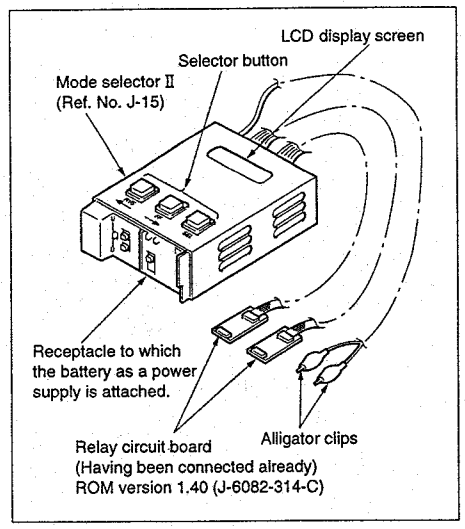

Fig. 6-2-6

Mode selector II (J-6082-282-A) connection diagram

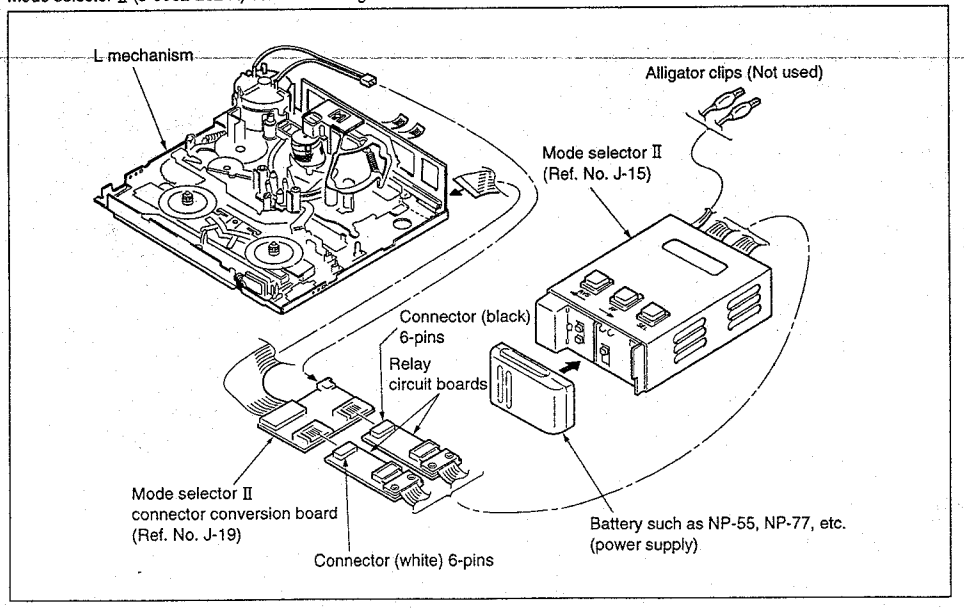

Fig. 6-2-7

2-5-2. Operation

1. Operation flow chart

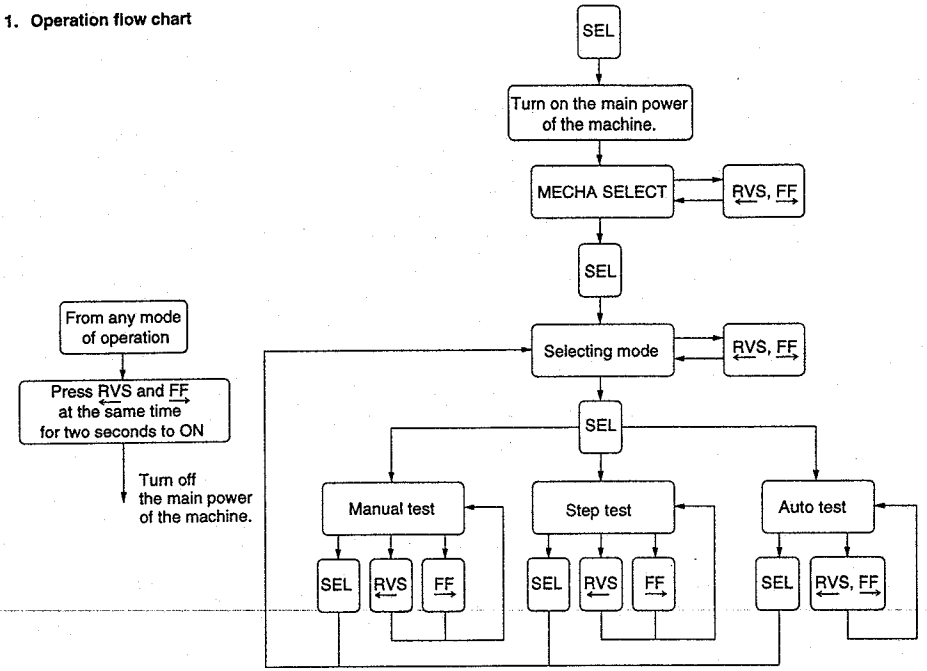

2. Turn on the power of the mode selector II

Turn on the power by pressing the SEL button to ON.

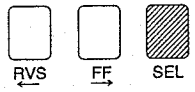

3. Turn off the power of the mode selector II

Turn off the power by pressing the RVS and FF buttons at the same time for two seconds.

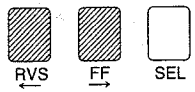

4. Selecting mechanism type

Immediately after the power is turned on, the MECHA SELECT menu display appears. Call the types of mechanism by pressing the RVS and FF buttons. When a desired type of mechanism appears, press the SEL button. This is the end of selecting the mechanism type. (Fig. I shows an example of selecting the L mechanism.)

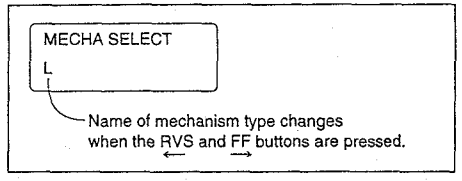

Fig. I

5. Selecting mode

Select a type of test mode from "MANUAL", "STEP" or "AUTO". Call a desired type of by pressing RVS and FF buttons, and press the SEL button. This is the end of selecting the test mode. (Fig. II shows an example of selecting the "MANUAL" mode of test.)

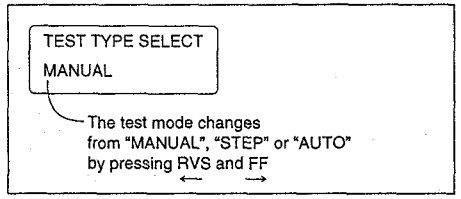

Fig. II

6. MANUAL test

The motors are driven manually in this mode only during the period while the RVS and FF buttons are pressed. Operator can control the motors freely in this mode.

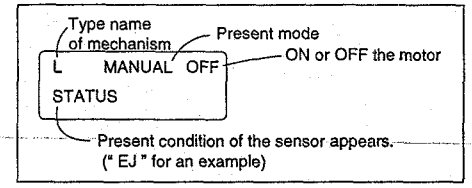

Fig. III

7. STEP test

Direction of motor rotation is determined by the RVS and FF buttons. A series of movement only from a status to another status is performed by motor in this test.

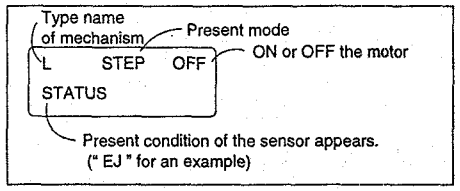

Fig. IV

8. AUTO test

The operation sequence of the respective types of mechanism deck has already been stored in the memory of the mode selector II. The auto test mode is used to check whether the mechanism under test performs the specified operation by verifying the sensors' output signals with the sequence stored in the memory. The same operation is performed by pressing either RVS or FF button.

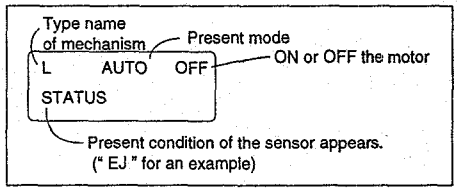

Fig. V

Transition order of mechanism status (position)

A desired mechanism status (position) can be specified by selecting either MANUAL or STEP test (excluding AUTO) and pressing the RVS or FF button, after selecting type of mechanism. (The mechanism status appears in the STATUS column.)

EJ ↔ USE ↔ S. OFF ↔ D. ON ↔ LE ↔
STOP ↔ FF ↔ R/P ↔ RVS

Code A	B	C	D	MD name	L machanism
1	0	1	0	1	EJ
1	1	1	0	2	USE
1	1	0	0	3	S. OFF
1	1	0	1	4	D. ON
1	0	0	1	5	LE
0	1	0	1	6	STOP
0	1	1	1	7	FF
1	0	1	1	8	R/P
0	0	1	1	9	RVS

9. Battery alarm message

The battery alarm message is an asynchronous message and appears when voltage of a battery which is the power supply of this machine, drops. When this message appears, all operations of the machine become possible, and the battery must be exchanged.

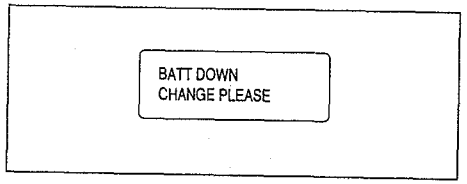

Fig. VI

2-3. CHECK, ADJUSTMENT AND REPLACEMENT PROCEDURE OF MECHANISM BLOCK

3-1. Timing belt and capstan cover

1. Removal

1) Loosen the screw fixing the tension arm, and remove the tension arm.
2) Remove the timing belt ① in the order of Ⓐ and Ⓑ.
3) Remove the two screws ② (2 × 4.5), and remove the capstan cover ③. When removing the capstan cover, be careful not give scars on the flexible board ④ coming from the Ⓒ of the drum.

2. Notes when re-assembling

1) When re-assembling, hook the timing belt ① in the order of Ⓑ,Ⓓ then Ⓐ while rotating the relay gear. Be careful also that the timing belt is not twisted or inside out.
2) After the timing belt is attached, perform "Timing belt tension adjustment" as described in the following illustration.

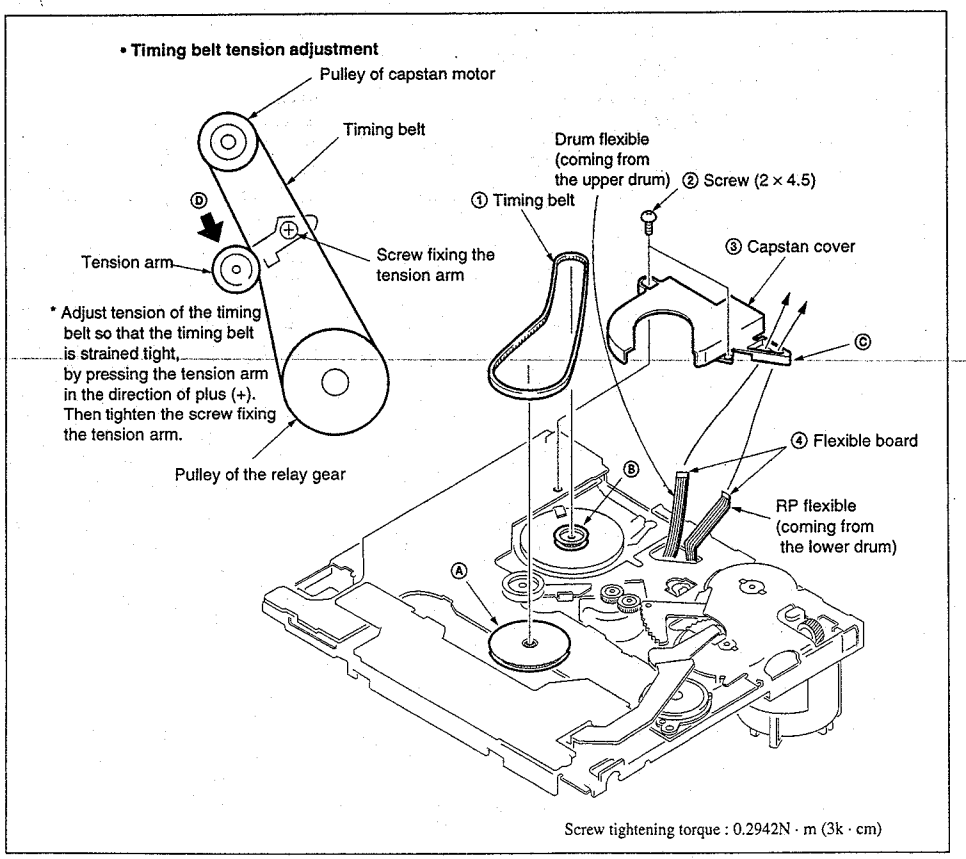

Fig. 6-2-8

3-2. Drum cap, pinch arm assembly, drum assembly, tape support, HC block assembly and TG2

1. Removal

1) Remove the cassette compartment block assembly referring to section 1-1.
2) Remove the drum cap ① by sliding it in the direction of arrow Ⓐ. Be careful not to touch the tape contacting surface of the drum assembly with bare hand during this removal.
3) Set the machine into the unloaded end (ULE) position.Push the pinch arm block assembly ② into Ⓑ of the claw of the pinch slider, and remove the pinch arm block assembly upwards while escaping the pinch driving roller block Ⓒ. Be careful not to touch the tape contacting surface of the drum assembly and pinch roller with bare hand during this removal.
4) Remove the mold spring block Ⓓ from the HC block assembly ⑥ from the lower drum, and hook the mold spring on the bent portion Ⓔ of the mechanism chassis.
5) While holding the top of the drum assembly ④ with hand, remove the three screw drum fitting assemblies ③ Ⓕ, Ⓖ and Ⓗ, and remove the drum assembly ④ while paying attention not to touch the tape contacting surface with bare hand.
6) Remove the tape support ⑤ and HC block assembly ⑥ from the sub chassis.
7) Remove the TG2 in the order of TG2 upper flange ⑦, TG2 roller ⑧, TG2 sleeve ⑨ and compression coil spring ⑩. Be careful not to touch the tape contacting surface of the TG2 roller with bare hand during this removal.

2. Notes when re-assembling

1) Be careful not to touch the tape contacting surface of the TG2, HC roller, pinch roller and drum assembly with bare hand during this removal.
2) After TG2 is attached, perform "Height adjustment" and "Tape path adjustment" referring to the respective sections of Service Manual.
3) When attaching the drum assembly ④, tighten the three drum fittingscrew assemblies ③ Ⓕ, Ⓖ and Ⓗ, in the order of Ⓗ, Ⓖ and Ⓕ. After the drum assembly ④ is attached, perform "Tape path adjustment".

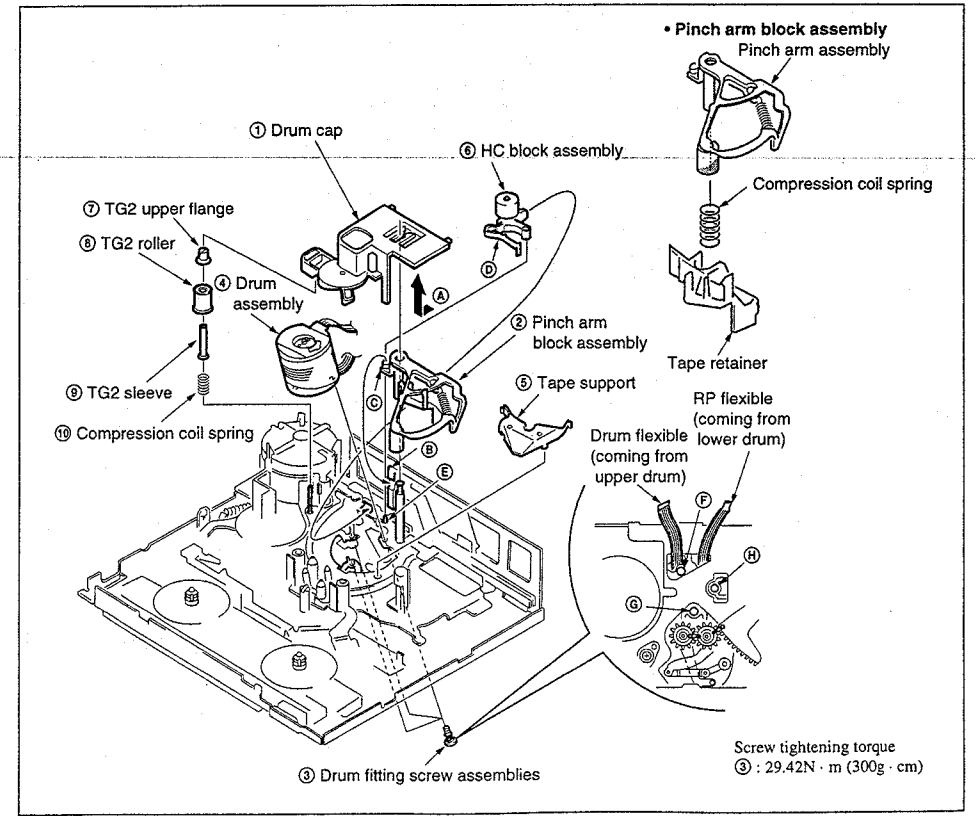

Fig. 6-2-9

3-3. Capstan motor, RH base block assembly, pendulum arm assembly and dew condensation sensor

1. Removal

Note : The RH base block assembly, pendulum arm assembly and dew condensation sensor can be removed without removing the capstan motor.

1) Remove the cassette compartment block assembly referring to section 1-1.
2) Remove the timing belt and capstan cover referring to section 3-1.
3) Remove the two screws ① (2 × 2.2) and remove the capstan motor ②. Be careful not to touch the tape contacting surface of the capstan with bare hand during this removal.
4) Remove the screw ③ (1.4 × 2.5) and remove the MIC terminal ④ and MIC holder ⑤.
5) Remove the stop washer ⑥ and the three screws (2 × 4.5) ⑦, and remove the RH base block assembly ⑧ while paying attention not to collide with the miss record prevention switch Ⓐ.
6) Remove the screw ⑨ (2 × 4.5) and remove the dew condensation sensor ⑩.
7) Remove the pendulum arm assembly ⑪.

2. Notes when re-assembling

1) After the pendulum arm assembly ⑪ is attached, confirm that the Ⓑ block is coated with grease. If the Ⓑ block is coated with grease, coat it with grease as much as 1/2 grain.
2) Attach the RH base block assembly ⑧ the mechanism chassis while separating the neutrality arm (S) and (T) assemblies as shown. At this time, confirm that the pendulum arm assembly ⑪ is located inside the neutrality arm (S) and (T) assemblies.
3) Do not touch the tape contacting surface of the capstan and dew condensation sensor with bare hand.
4) Route the harness of the dew condensation sensor ⑩ as shown in Fig. a.

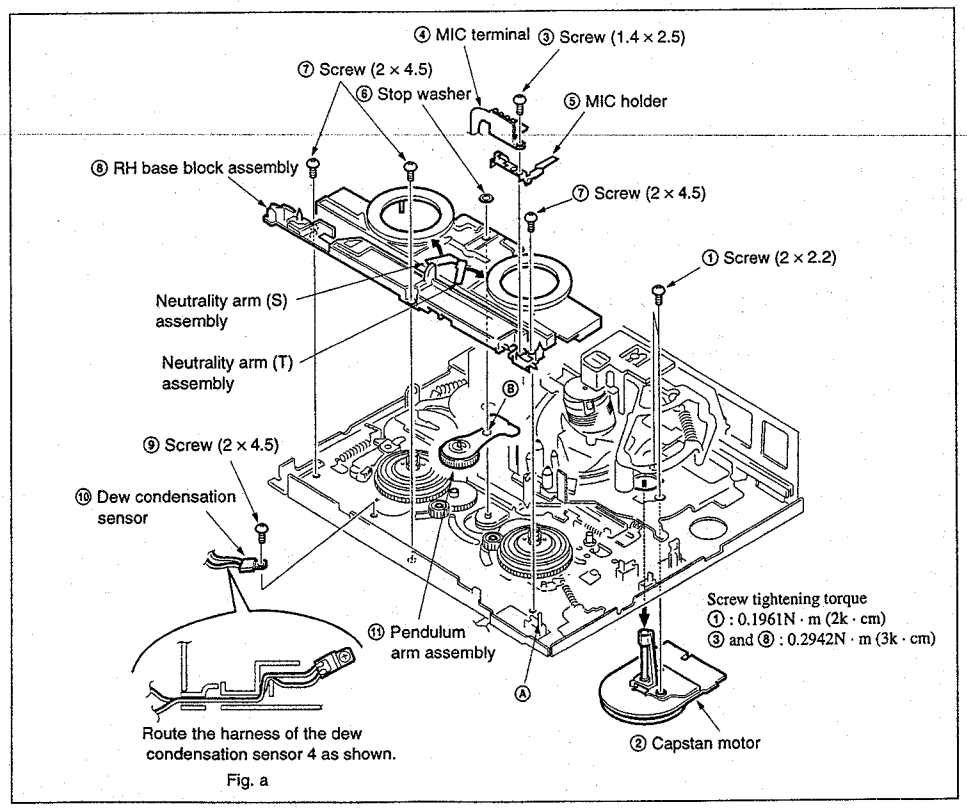

Fig. 6-2-10

3-4. TG1 arm block assembly and TG7 block assembly

1. Removal

1) Remove the cassette compartment block assembly referring to section 1-1.
2) Remove the RH base block assembly, pendulum arm assembly and dew condensation sensor referring to section 3-3.
3) Remove the tension coil spring (TG1) ① from "A".
4) Remove the stopper washer (ø1.2) and screw (2 × 2.2) ③. Remove the TG1 arm block assembly ④ upwards. At this time, be careful not touch the TG1 tape guide with bare spring.
5) Remove the tension coil spring (TG7) ⑤ from "B".
6) Remove the screw (2 × 4.5) ⑥, TG7 holder assembly ⑦ and screw (2 × 2.2) ⑧. Remove the TG7 arm block assembly ⑨ upwards. At this time, be careful not touch the TG7 tape guide with bare spring.

2. Notes when re-assembling

1) Be careful not touch the TG1 and TG7 tape guides with bare spring.
2) When attaching the band holders of TG1 and TG7 block assemblies, fix the screws by rotating them in the direction of loosening the bands. (If the bands have tension, tape loading cannot be activated.)
3) After TG1 and TG7 are attached, confirm that both TG1 and TG7 do not collide with the sub slider.
4) After TG1 and TG7 are attached, perform the TG1 and TG7 position adjustment and height adjustment.
5) Perform "Tape path adjustment".

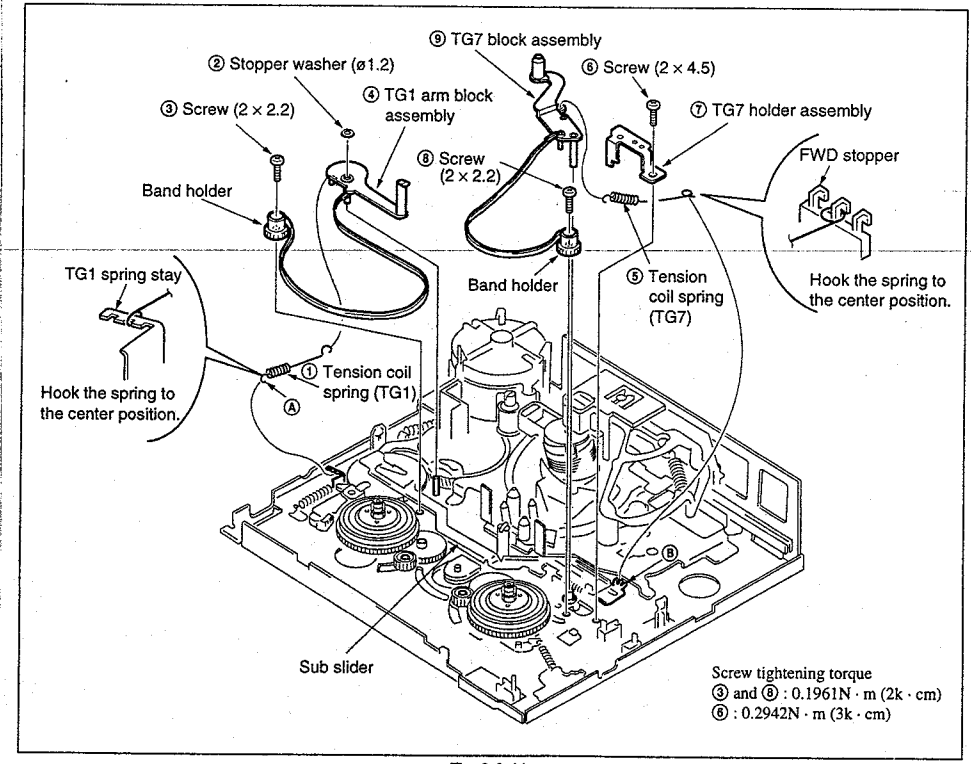

Fig. 6-2-11

3-5. Reel table (S) assembly and reel table (T) assembly

1. Removal

1) Remove the cassette compartment block assembly referring to section 1-1.
2) Remove the RH base block assembly, pendulum arm assembly and dew condensation sensor referring to section 3-3.
3) Remove the TG1 arm block assembly and the TG7 arm block assembly referring to section 3-4.
4) Remove the reel table (S) assembly ① (with white reel cap) and the reel table (T) assembly ② (with black reel cap) upwards. Be careful that the reel table thrust retainer (t = 0.5) ③ can come with the reel table (T) assembly ② at this time.
5) Remove the direct gear assembly ④ upwards
6) Remove the stopper washer (ø1.2) ⑤, limiter gear ⑥ and reel table thrust retainer (t = 0.13) ⑦ in this order. Be careful that the reel table thrust retainer (t = 0.13) ⑦ can come with the limiter gear ⑥ at this time.

2. Notes when re-assembling

1) Before start attaching the parts, confirm that the respective axes of Ⓐ, Ⓑ, Ⓒ, Ⓓ, Ⓔ, Ⓕ and Ⓖ are coated with grease. If they are not coated with grease, coat them with grease as much as 1/2 grain.
2) Be careful not to put grease on the reflection label surface of the direct gear assembly ④.
   FLOIL grease SG-941 (7-662-001-39)
3) After the reel table (T) assembly ② is attached, perform "Reel table (T) assembly height check".

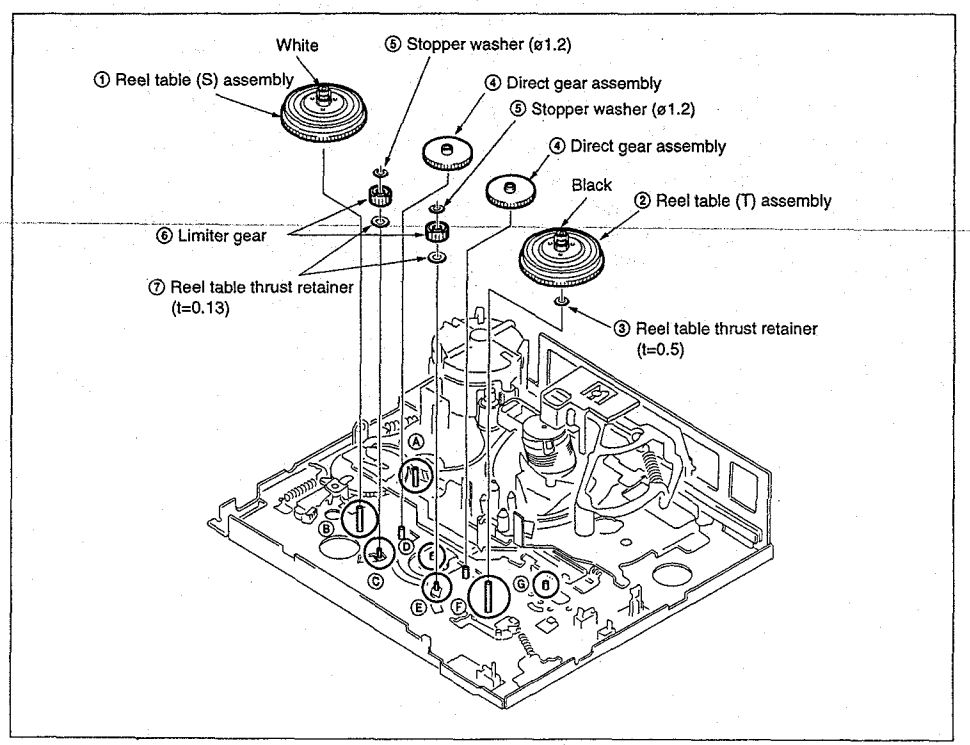

Fig. 6-2-12

3-6. S brake block assembly, T brake block assembly, sub slider and FWD stopper

1. Removal

1) Remove the cassette compartment block assembly referring to section 1-1.
2) Remove the RH base block assembly, pendulum arm assembly and dew condensation sensor referring to section 3-3.
3) Remove the TG1 and the TG7 arm block assemblies referring to section 3-4.
4) Remove the reel table (S) assembly and the reel table (T) assembly referring to section 3-5.
5) Remove the tension coil spring ① from the Ⓐ of mechanism chassis.
6) Remove the stopper washer (ø1.2), then remove the S brake block assembly (brake arm S ③, S release cam ④, S hard ⑤, torsion coil spring (S hard) ⑥ and torsion coil spring (S brake) ⑦) upwards. Be careful that the torsion coil spring (S hard) ⑥ is very easy to drop, at this time.
7) Remove the TG1 spring stay ⑧.
8) Remove the torsion coil spring ⑨ from Ⓑ of mechanism chassis.
9) Remove the stop washer (ø1.2) ⑩, and remove the brake arm T ⑪.
10) Remove the tension coil spring ⑫ from Ⓒ of the sub slider.
11) Remove the stopper washer (ø1.5) ⑬. Push and slide the sub slider ⑭ in the direction of Ⓓ, and remove the sub slider ⑭ upwards then remove the FWD stopper ⑮ in this order.

2. Notes when re-assembling

1) Before attaching the S brake block assembly, confirm that the bottom of the brake shaft S Ⓔ of the mechanism chassis is coated with grease. If not, coat it with grease as much as 1/2 grain.
2) After the S brake sub assembly is attached, confirm that the dowel Ⓕ of the sub slider ⑭, is inserted in the slot Ⓖ of the sub slider driving lever. Confirm that the Ⓒ part of the sub slider ⑭ is located outside the protrusion Ⓗ of the FWD stopper ⑮ too.
   FLOIL grease SG-941 (7-662-001-39)

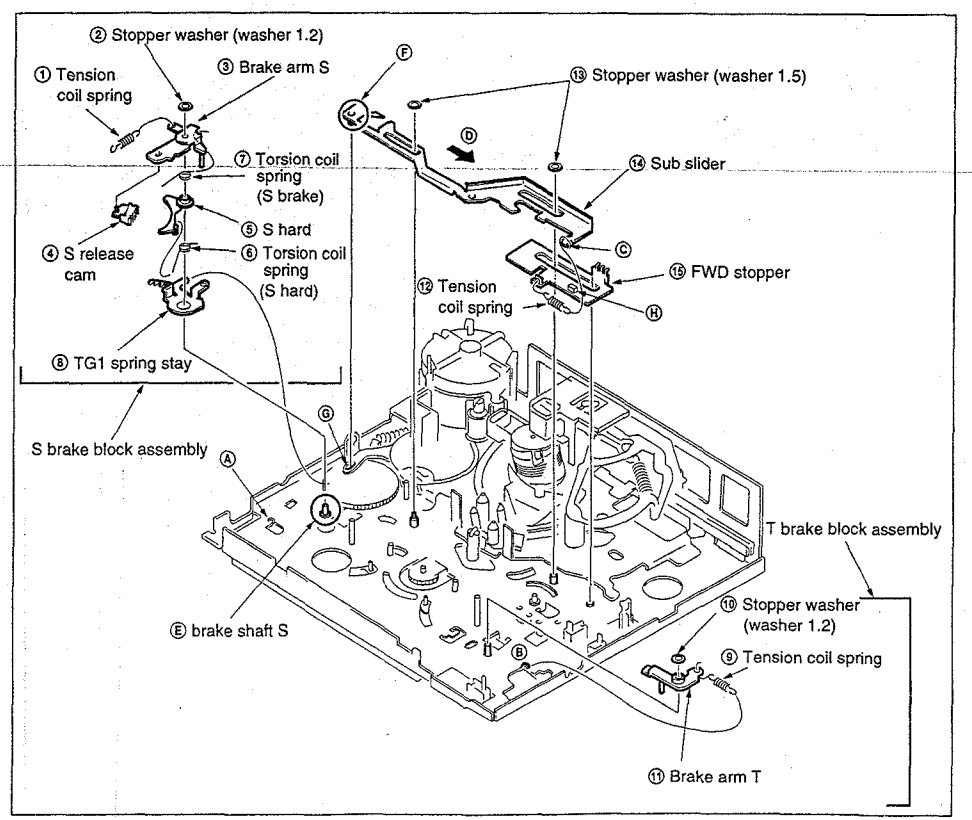

Fig. 6-2-13

3-7. GL gear (S) block assembly, GL gear (T) assembly, coaster (S) block assembly and coaster (T) block assembly

1. Removal

1) Remove the cassette compartment block assembly referring to section 1-1.
2) Remove the timing belt and capstan cover referring to section 3-1.
3) Remove the RH base block assembly, pendulum arm assembly and dew condensation sensor referring to section 3-3.
4) Remove the stopper washer (ø1.5) ① and stopper washer (ø2) ②, then remove the GL gear (S) block assembly ③.
5) Remove the stopper washer (ø1.5) ④ and stopper washer (ø2) ⑤, then remove the GL gear (T) block assembly ⑥.
6) Remove the stopper washer (ø2.5) ⑦, and remove the coaster (S) block assembly ⑧. Be careful not to touch the tape contacting surface of the coaster with bare hand.
7) Remove the stopper washer (ø2.5) ⑨, and remove the coaster (T) block assembly ⑩. Be careful not to touch the tape contacting surface of the coaster with bare hand.

2. Notes when re-assembling

1) Attach the parts from beneath the mechanism chassis.
2) Be careful not to touch the tape contacting surface of the coaster with bare hand.
3) Perform the phase alignment as shown by the GL gear (S) block assembly ③ and GL gear (T) block assembly ⑥ are attached. (Refer to Fig. a.)
4) After all parts are attached, perform the "Tape path adjustment".

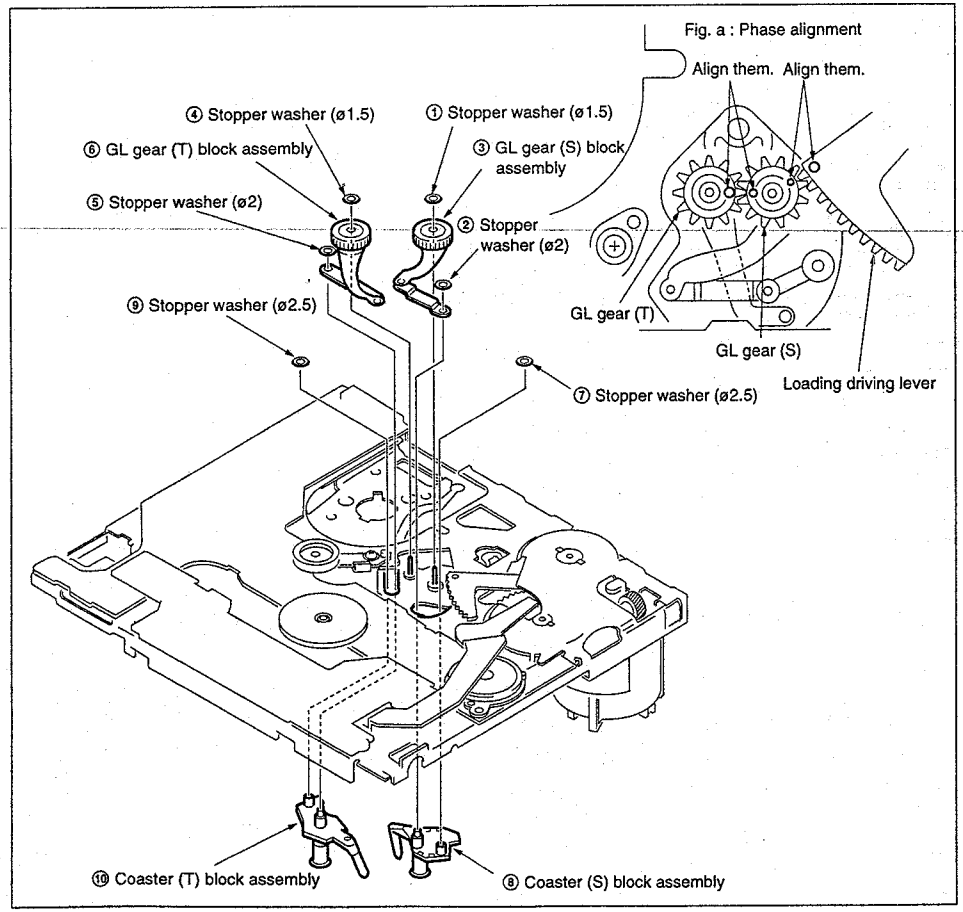

Fig. 6-2-14

3-8. Cam motor assembly, sub slider driving lever, main cam gear and joint gear

1. Removal

Note 1 : Do not remove the sub chassis (drum base) from the mechanism chassis. Correct tape path will be lost and the tape path adjustment cannot be performed even though the sub chassis (drum base) is re-installed to the mechanism chassis.

Note 2 : The cam motor assembly can be removed from the motor holder by removing the cassette compartment block assembly.

1) Remove the cassette compartment block assembly referring to section 1-1.
2) Remove the drum cap, pinch arm assembly, drum assembly, tape support and HC block assembly referring section 3-2.
3) Remove the RH base block assembly, pendulum arm assembly and dew condensation sensor referring to section 3-3.
4) Remove the TG1 arm block assembly ad TG7 block assembly referring to section 3-4.
5) Remove the reel table (S) assembly and reel table (T) assembly referring to section 3-5.
6) Remove the sub slider referring to section 3-6.
7) Remove harness of the cam motor assembly from Ⓐ of the motor holder. (Refer to Fig. a.)
8) Remove the cam motor assembly ① from the motor holder ③ while taking care not to break the claw.
9) Remove the two screws ② (2×4.5), and remove the motor holder ③.
10) Remove the sub slider driving lever ④, main cam gear ⑤ and joint gear ⑥ in this order.

2. Notes when re-assembling

1) Insert the gears through the phase pins Ⓑ and Ⓒ as follows before attaching the gears.
   Phase pin Ⓑ : Mechanism chassis + mode slider
   Phase pin Ⓒ : Pinch slider + sub cam gear + mechanism chassis
2) Before attaching the joint gear ⑥, confirm that the points Ⓓ and Ⓔ where the mechanical chassis joint gear is attached, and the joint gear worm, with grease. If these points are not coated with grease, coat the points Ⓓ and Ⓔ where the mechanical chassis joint gear is attached, with grease as large as size of a grain. Fill roots of the joint gear worm with grease.
3) Before attaching the main cam gear ⑤, confirm that the portions shown by Fig. b are coated with grease. If not, coat the entrance hole at the center of rotation with grease as large as size of a grain. Fill the cam grooves with grease.
4) Before attaching the cam motor assembly ①, confirm that the gear worm and tip of the gear are coated with grease. If not, coat the tip of the gear with grease as large as size of a grain. Fill roots of the worm of the gear worm with grease.
5) Direct label of the cam motor assembly ① to the front when attaching the cam motor assembly ①.
   FLOIL grease SG-941 (7-662-001-39)

Reference
Procedure to attach the sub cam gear and main cam gear

- Refer to "Notes when re-assembling" of sections 3-8 and 3-9, Fig. 6-2-15 and Fig. 6-2-16.

1) Place a mechanical deck in a posture that cassette comes to the front and the drum is placed in the opposite side.
2) Move the pinch slider (Fig. 6-2-16-①) to the left-most position then attach it to the mechanism chassis (so that the two dowels of the mechanism chassis fit the groove of pinch slider). Move the pinch slider to the right-most end.
3) Attach the loading drive lever to (Fig. 6-2-16-③) to the mechanism chassis, and rotate the loading drive lever fully clockwise.
   (When the GL gear (Fig. 6-2-14-③ and ⑥) has already been attached, adjust the position so that the smaller round hole of the GL gear S (Fig. 6-2-14-③) agrees with the round hole of the loading drive lever.)
4) Adjust the pinch slider so that the alignment mark (o) of the pinch slider √ agrees with the alignment mark (o) which is inscribed on the inner tooth of the sub cam gear (Fig. 6-2-16-②). (See Fig. 6-2-15-Fig. c) Under this condition, slide the sub cam gear into underneath the sub chassis (drum base) and the pinch slider. At this time, boss of the loading drive lever must inter the cam groove of the sub cam gear.
5) Attach the joint gear (Fig. 6-2-15-⑤) to the mechanism chassis.
6) Adjust the main gear so that the triangle alignment mark of the main cam gear (Fig. 6-2-15-④) of the main cam gear agrees with the triangle alignment mark of the sub cam gear. At the same time, the round alignment mark of the main cam gear and the round alignment mark of the encoder gear (Fig. 6-2-16-④). Under this condition, attach the main cam gear. (See Fig. 6-2-15-Fig. c)
7) Attach the sub slider drive lever (Fig. 6-2-15-④) so that the boss of the sub slider drive lever enters the cam groove of the main cam gear.
8) Insert the front boss of the motor holder (Fig. 6-2-15-③) into the center of the main cam gear, then into the mechanism chassis.(Fig. 6-2-15-*1)
9) Insert the rear boss of the motor holder (Fig. 6-2-15-③) into the center of the sub cam gear (Fig. 6-2-15-*2).
10) Hook the side claw of the motor holder (Fig. 6-2-15-③) to the mechanism chassis.
11) While aligning the hole of the boss in the rear of the motor holder (Fig. 6-2-15-③) with the hole of the mechanism chassis, attach the motor holder (Fig. 6-2-15-③).
12) Fix the motor holder (Fig. 6-2-15-③) using screws at two positions.

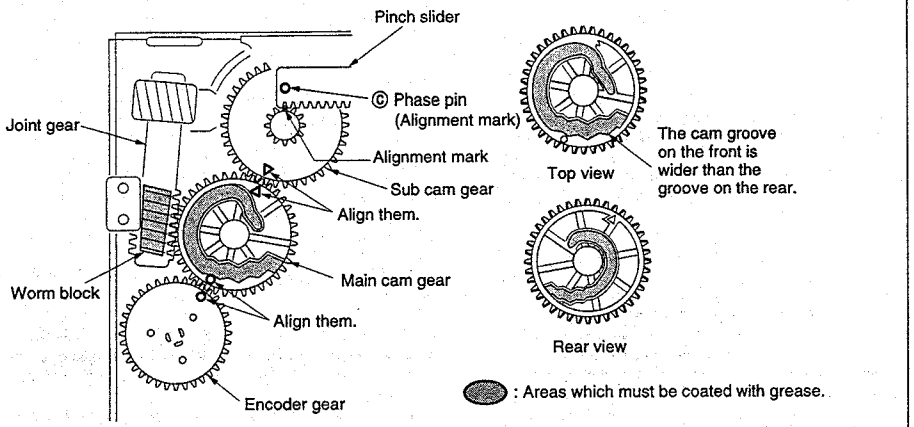

Fig. c. Phase alignment of the pinch slider, sub cam gear, main cam gear and encoder gear.

: Areas which must be coated with grease.

Fig. b. Area of the main cam gear which must be coated with grease.

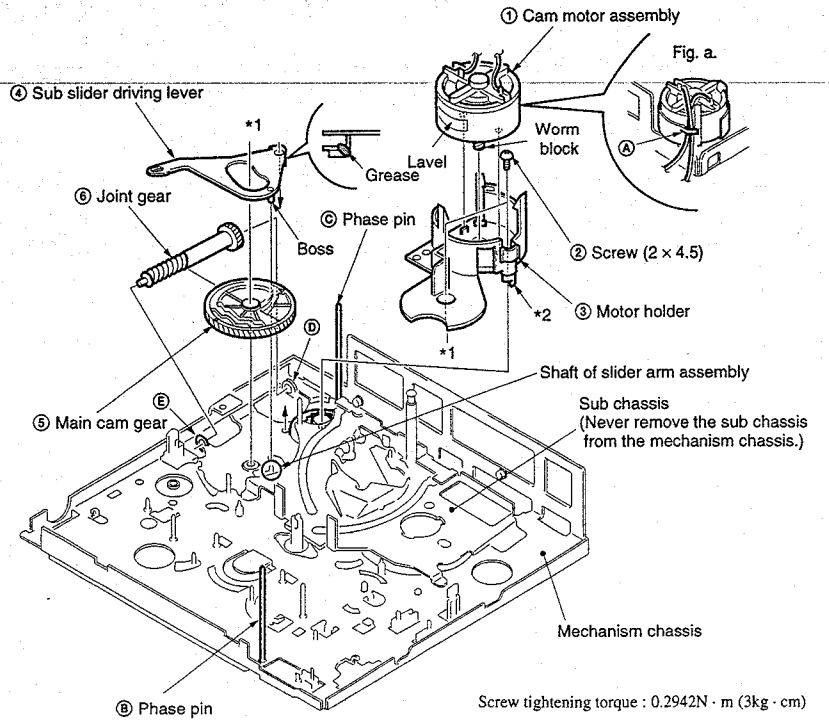

Fig. 6-2-15

3-9. Pinch slider, sub cam gear, loading driving lever and encoder gear

1. Removal

1) Remove the cassette compartment block assembly referring to section 1-1.
2) Remove the drum cap, pinch arm assembly, drum assembly, tape support and HC block assembly referring to section 3-2.
3) Remove the RH base block assembly, pendulum arm assembly and dew condensation sensor referring to section 3-3.
4) Remove the TG1 arm block assembly and the TG7 arm block assembly referring to section 3-4.
5) Remove the reel table (S) assembly and the reel table (T) assembly referring to section 3-5.
6) Remove the S brake block assembly, TG1 spring stay and sub slider referring to section 3-6.
7) Remove the cam motor, sub slider driving lever and main cam referring to section 3-8.
8) Remove the pinch slider ① by sliding in the direction of Ⓐ.
9) Remove the sub cam gear ② and the loading driving lever ③ in this order.
10) Remove the claw of the encoder gear ④ from the encoder switch side of its bottom, and remove the encoder gear ④ upwards.

2. Notes when re-assembling

1) Refer to section "3-8. Reference" for details of attachment.
2) Before attaching the encoder gear ④, confirm that the cam surface is coated with grease. If not, coat the areas which are shown in Fig. a. with grease as large as 1/2 size of a grain.
3) Before attaching the loading driving lever ③, confirm that the burring area is coated with grease. If not, coat it with grease as large as size of a grain as shown in Fig. 15-b.
4) Before attaching the sub cam gear ②, confirm that the area shown by Fig. 15-a is coated with grease. If not, coat the entrance hole at the center of rotation with grease as large as size of a grain. Fill the cam grooves with grease.
5) When attaching the pinch slider ①, first slant it to the left slightly, align it with the dowels Ⓑ and Ⓓ in the left of the mechanism chassis, then hold it in horizontal level posture to finally attach it.
6) After the parts are attached, insert the gears through the phase pins Ⓒ and Ⓓ as follows.
   Phase pin Ⓔ : Mechanism chassis + mode slider
   Phase pin Ⓕ : Pinch slider + sub cam gear + mechanism chassis
   FLOIL grease SG-941 (7-662-001-39)

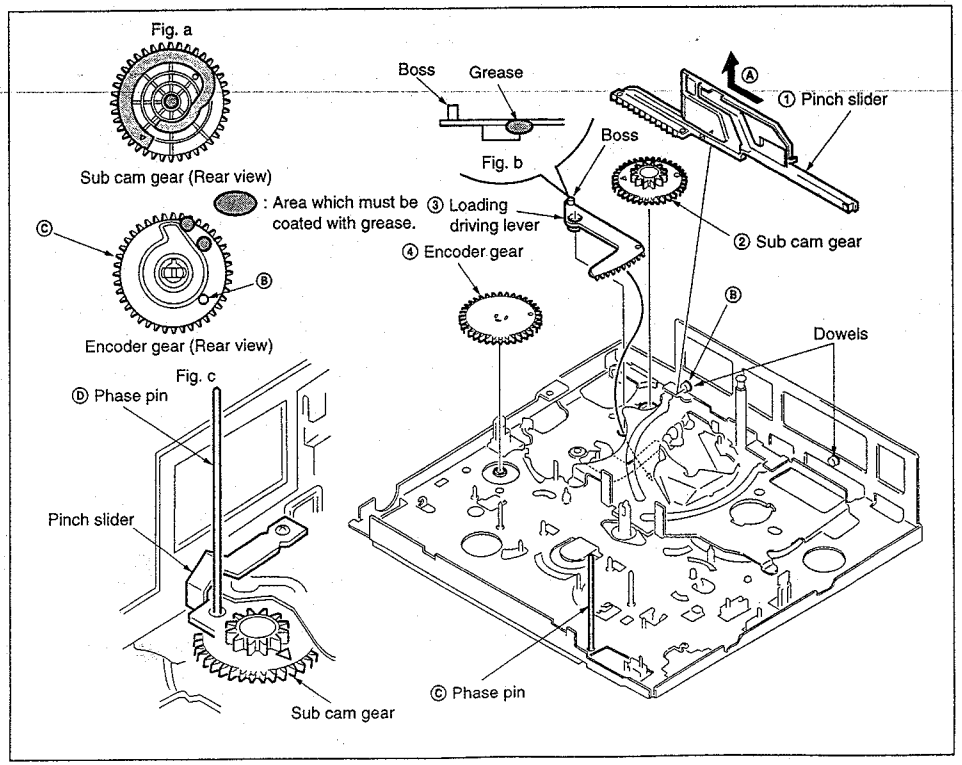

Fig. 6-2-16

3-10. Mode slider, slider arm assembly, relay gear and tension pulley

1. Removal

1) Remove the cassette compartment block assembly referring to section 1-1.
2) Remove the drum cap, pinch arm assembly, drum assembly, tape support and HC block assembly referring to section 3-2.
3) Remove the RH base block assembly, pendulum arm assembly and dew condensation sensor referring to section 3-3.
4) Remove the TG1 arm block assembly and the TG7 arm block assembly referring to section 3-4.
5) Remove the reel table (S) assembly and the reel table (T) assembly referring to section 3-5.
6) Remove the S brake block assembly, TG1 spring stay and sub slider referring to section 3-6.
7) Remove the cam motor, sub slider driving lever and main cam referring to section 3-8.
8) Remove the tension coil spring ① from the limiter arm T at the spring R hook side ("Ⓐ" part).
9) Remove the mode slider ② in the direction of the arrow Ⓑ.
10) Remove the slider arm assembly ③ in the direction of the arrow Ⓒ.
11) Remove the stopper washer (ø1.2) ④, and remove the relay gear ⑤.
12) Remove the stopper washer (ø1.2) ⑥, and remove the tension pulley ⑦.

2. Notes when re-assembling

1) Before attaching the tension pulley ⑦, apply a drop of oil to Ⓓ part of the tension pulley shaft (on the tension arm assembly).
2) Before attaching the tension pulley ⑦ and relay gear ⑤, confirm that Ⓓ part of the tension pulley shaft (on the tension arm assembly), Ⓔ part of the relay gear shaft (on the mechanism chassis and Ⓕ part of the limiter arm T are coated with grease. If the "B" block is coated with grease, coat them with grease as much as 1/2 grain.
3) Before attaching the tension pulley ⑦ and relay gear ⑤, move down the limiter arm (T) and the limiter arm (S). (In the direction of the arrow Ⓖ)
4) Before attaching the slider arm assembly ③, move up the limiter arm (T) and the limiter arm (S). (In the direction of the arrow Ⓗ)
5) Before attaching the mode slider ③, confirm that the area shown by Fig. a is coated with grease. If not, coat the entrance hole at the center of rotation with grease as large as size of a grain. Fill the cam grooves with grease.
6) After the mode slider ② is attached, slide the mode slider to the right and align the phase hole at the right bottom of the mode slider with the phase hole of the mechanism chassis. (Refer to Fig. b.)
Mitsubishi diamond oil hydro fluid NT-68 (7-661-018-18)
FLOIL grease SG-941 (7-662-001-39)

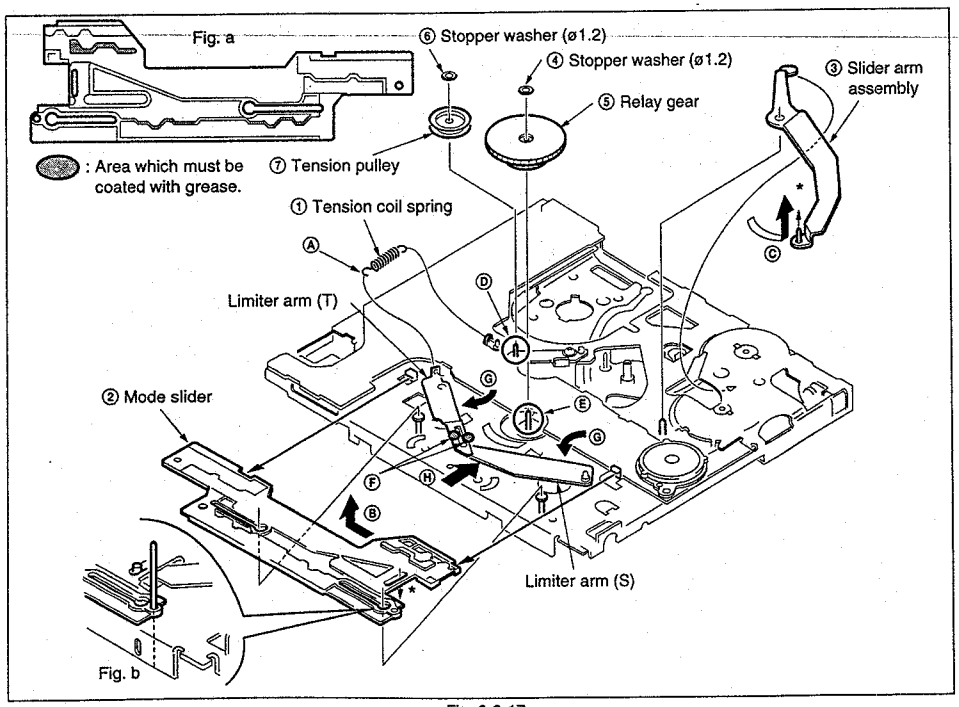

Fig. 6-2-17

3-11. Tension arm assembly and MD board

1. Removal

1) Remove the cassette compartment block assembly referring to section 1-1.
2) Remove the timing belt and capstan cover referring to section 3-1.
3) Remove the drum cap, pinch arm assembly, drum assembly, tape support and HC block assembly referring to section 3-2.
4) Remove the RH base block assembly, pendulum arm assembly and dew condensation sensor referring to section 3-3.
5) Remove the TG1 arm block assembly and the TG7 arm block assembly referring to section 3-4.
6) Remove the reel table (S) assembly and the reel table (T) assembly referring to section 3-5.
7) Remove the S brake block assembly, TG1 spring stay and sub slider referring to section 3-6.
8) Remove the cam motor, sub slider driving lever and main cam referring to section 3-8.
9) Remove the pinch slider, sub cam gear and encoder gear referring to section 3-9.
10) Remove the mode slider, slider arm assembly, relay gear and tension pulley referring to section 3-10.
11) Remove the screw (2 × 4.5) ①, TA washer ② and tension arm assembly ③ in this order.
12) Remove the screw (2 × 4.5) ④, and remove the encoder cover ⑤ white taking care not to break the claw.
13) Remove the three screws (2 × 4.5) ⑥, and remove the MD board ⑦ in the direction of the arrow Ⓐ.

2. Notes when re-assembling

1) The tension arm assembly ③ must not collide with the mechanism chassis.
2) When attaching the MD board ⑦, tighten the screws (2 × 4.5) ⑥ in the order of Ⓑ, Ⓒ and Ⓓ.
3) After all parts are attached, confirm that Ⓔ part of the tension pulley shaft, Ⓕ part of the relay gear shaft, and Ⓖ part of the limiter arm (T) are coated with grease. If not, coat them with grease as much as 1/2 grain.
FLOIL grease SG-941 (7-662-001-39)

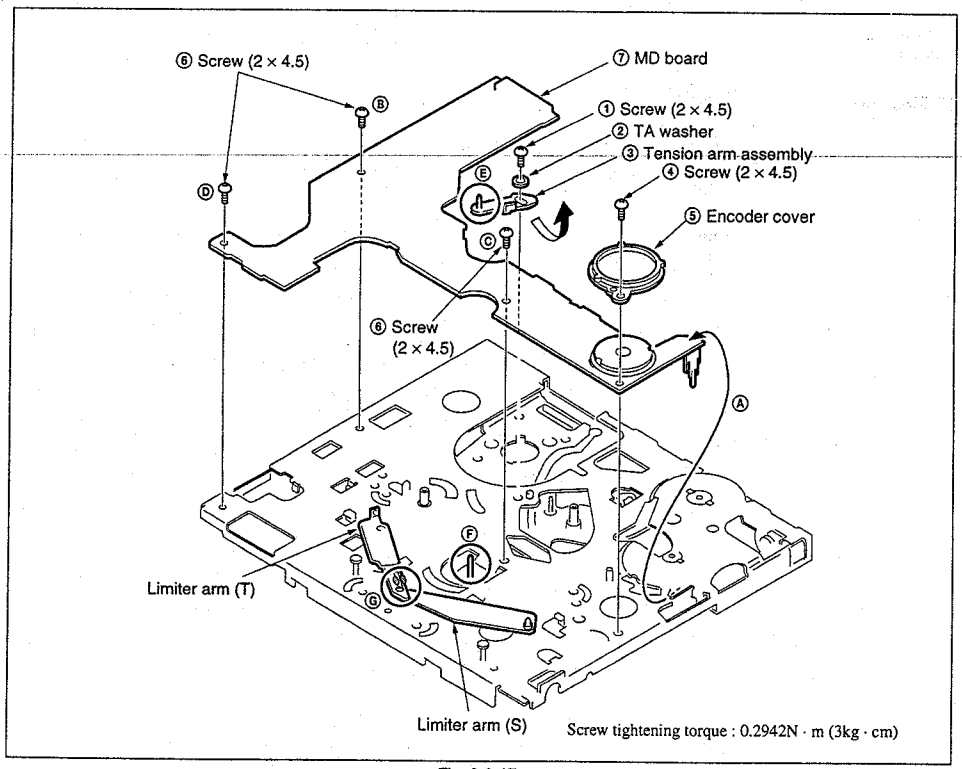

Fig. 6-2-17

2-4. ADJUSTMENTS AND CHECKS

4-1. ADJUSTMENT POSITION

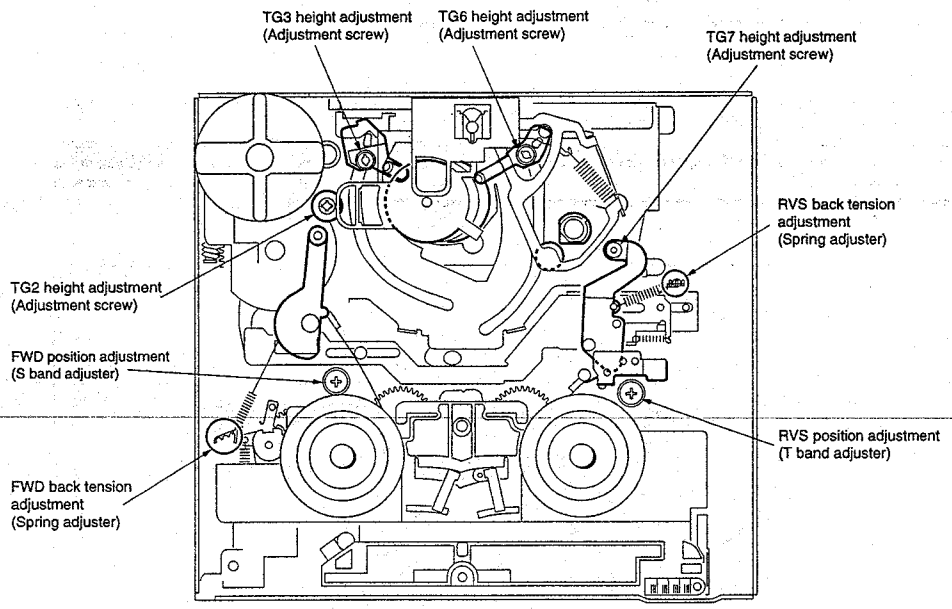

LOADING mode

4-2. ADJUSTMENT ORDER

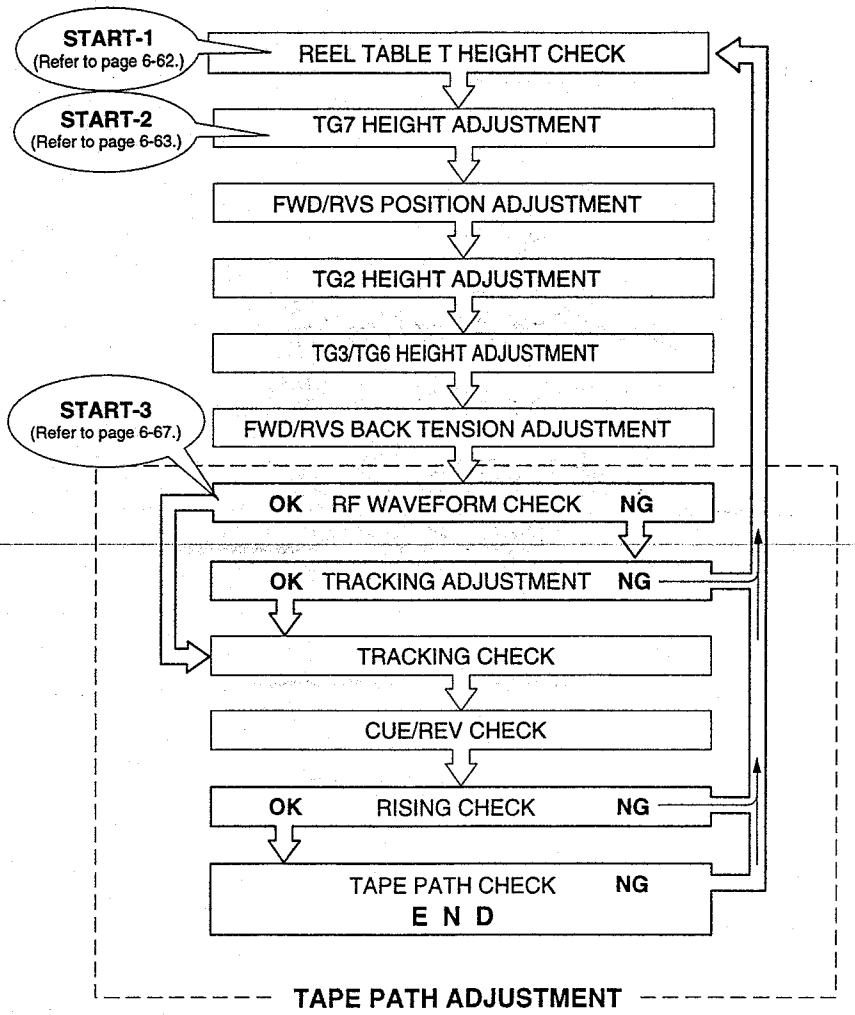

4-3. ADJUSTMENT AND CHECK METHOD

4-3-1. REEL TABLE T HEIGHT CHECK

1. Preparation before check

FL block : Remove
Position : (LOADING)
Jig used : Reel reference plate (J-7) and cassette reference plate (J-9)

2. Checking

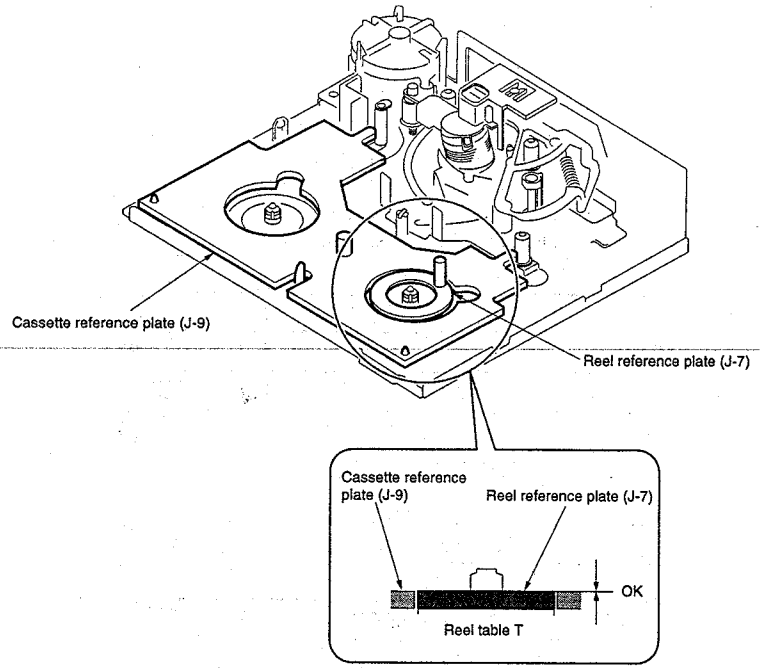

4-3-2. TG7 HEIGHT ADJUSTMENT

1. Preparation before adjustment

FL block : Remove
Position : (LOADING)
Jig used : Cassette reference plate (J-9) and tape path driver (J-13)

2. Adjustment

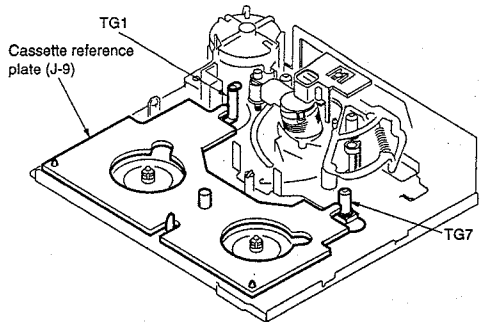

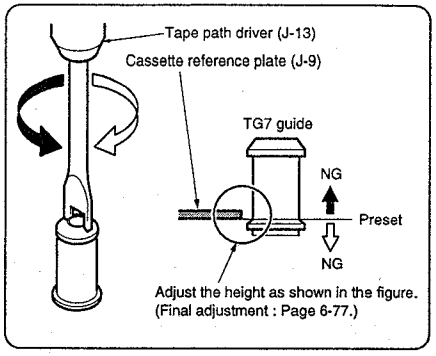

4-3-3. FWD/RVS POSITION ADJUSTMENT

1. Preparation before adjustment

FL block : Remove
Position : (LOADING (The pinch roller should be stuck.))
Jig used : Cassette reference plate (J-9) and FWD/BACK T adjustment driver (J-17)

2. Adjustment

First, loosen slightly the screws (2 × 2.2) securing S and T band adjusters.
After adjustment, tighten the screws (2 × 2.2) securing the S and T band adjusters. (Torque : 0.1961N · m (2 kg · cm))

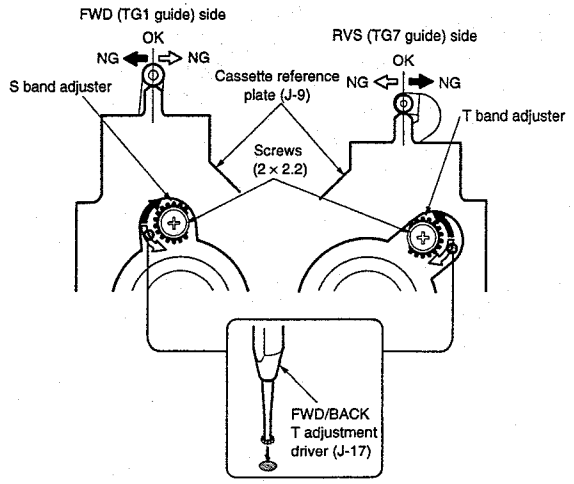

4-3-4. TG2 HEIGHT ADJUSTMENT

1. Preparation before adjustment

FL block : Remove
Position : (LOADING)
Jig used : Cassette reference plate (J-9), TG2 preset plate (L mechanism) (J-10) and screwdriver
Jig setup : Attach the TG2 preset plate (L mechanism) to the cassette reference plate with two screws.

2. Adjustment

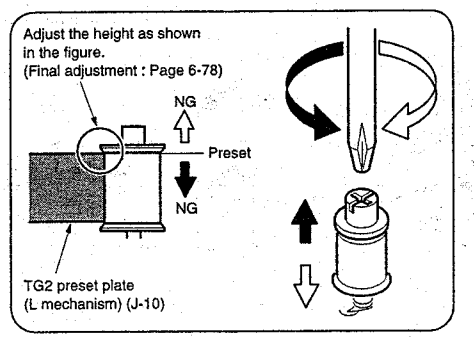

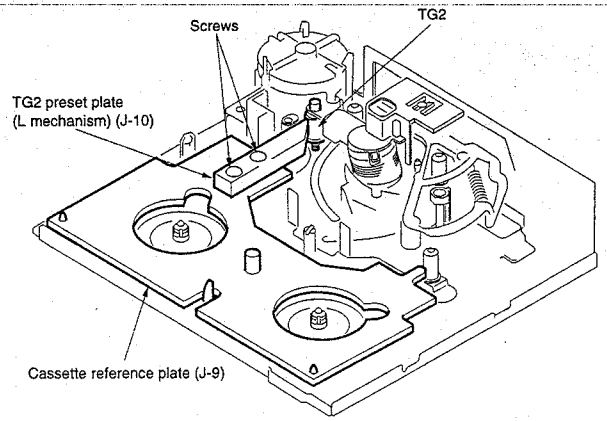

4-3-5. TG3/TG6 HEIGHT AND INCLINATION ADJUSTMENTS

1. Preparation before adjustment

FL block : Remove
Drum assembly : Remove
Position : (LOADING)
Jig used : Dummy drum (J-8), TG-3/6 preset plate (L mechanism) (J-11) and screwdrivers
Jig setup : Attach the TG-3/6 preset plate (L mechanism) to the dummy drum with screws.

2. Adjustment

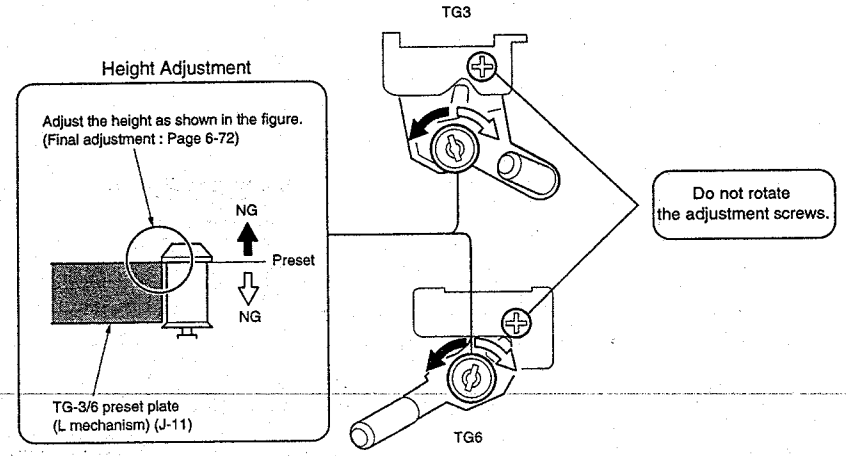

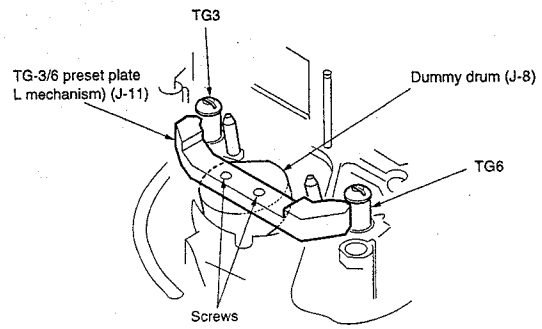

4-3-6. FWD/RVS BACK TENSION ADJUSTMENT

1. Preparation before adjustment

Mechanism deck : Install the mechanism deck to the DCR machine.
Jig used : DV torque cassette (J-6) and a pair of tweezers (for changing the staying position of spring)

2. Adjustment

Note : At the FWD (TG1) side, measure the DV torque cassette (J-6) in the FWD mode.
At the RVS (TG7) side, measure the DV torque cassette (J-6) in the RVS mode.

Specified value:

FWD back tension	1.226 — 1.520mN · m (12.5 — 15.5g · cm)
RVS back tension	0.706 — 1.226mN · m (7.5 — 12.5g · cm)

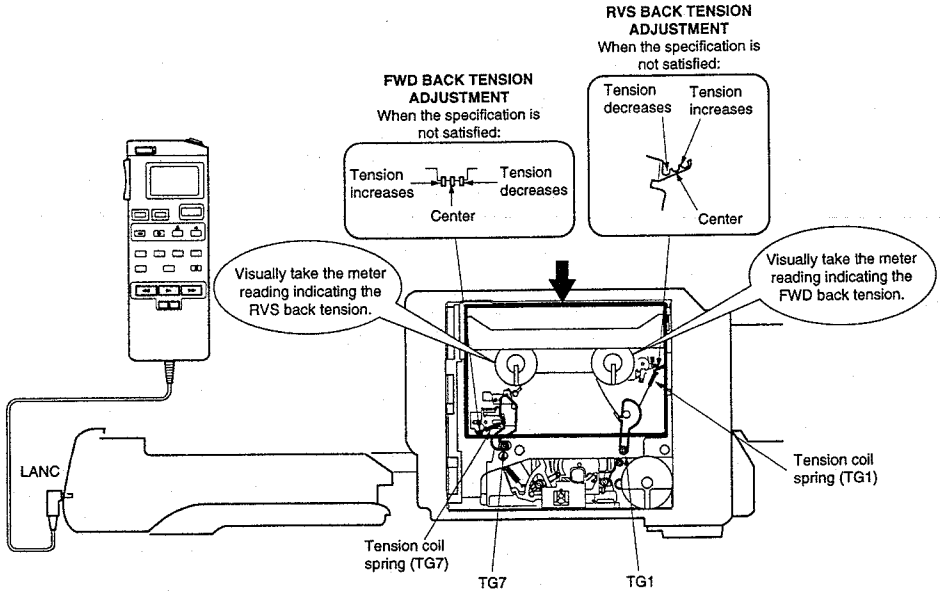

4-3-7. PREPARATION FOR ADJUSTMENT AND RF WAVEFORM CHECK

Note : The connection and setting of the adjustment remote commander differ depending on the model. Refer to the corresponding service manual. This section describes connection and setting for DCR-VX9000E.

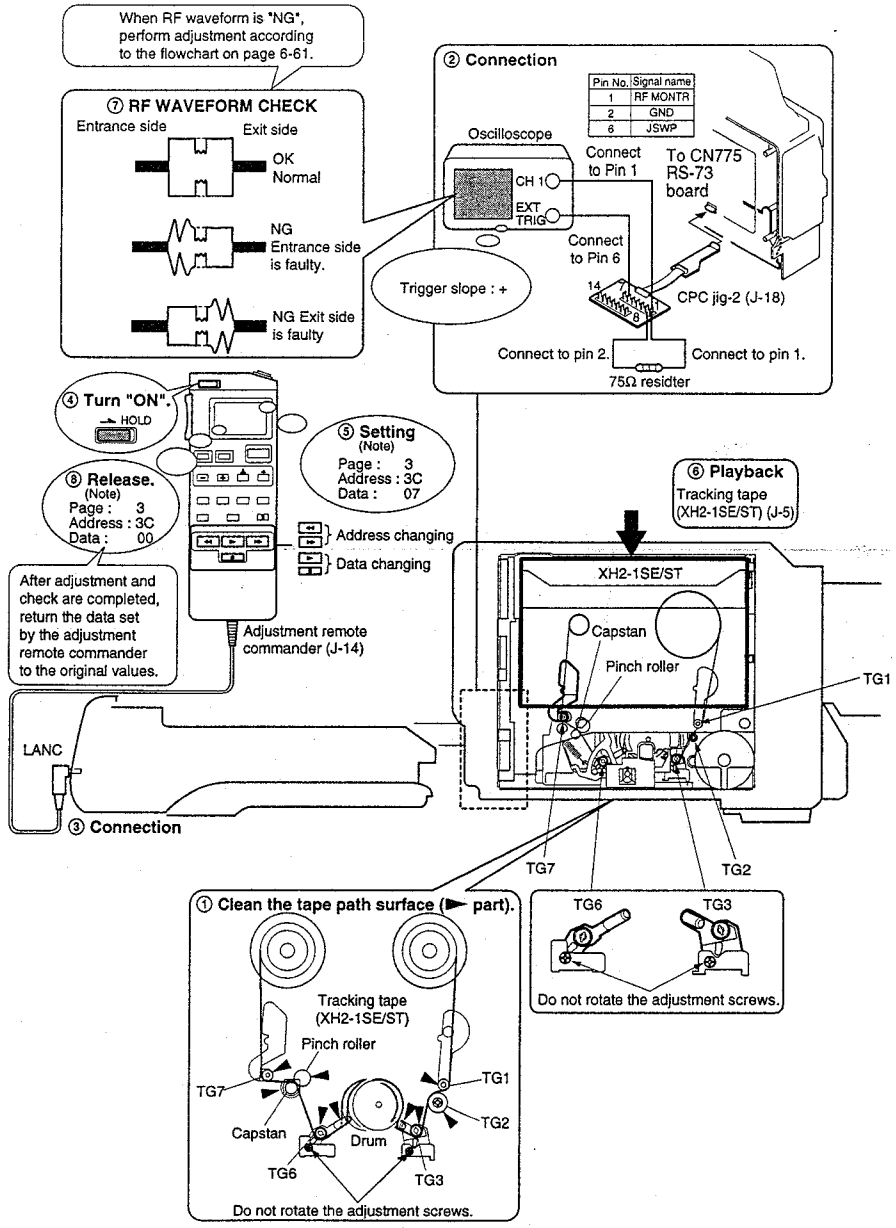

4-3-8. TRACKING ADJUSTMENT

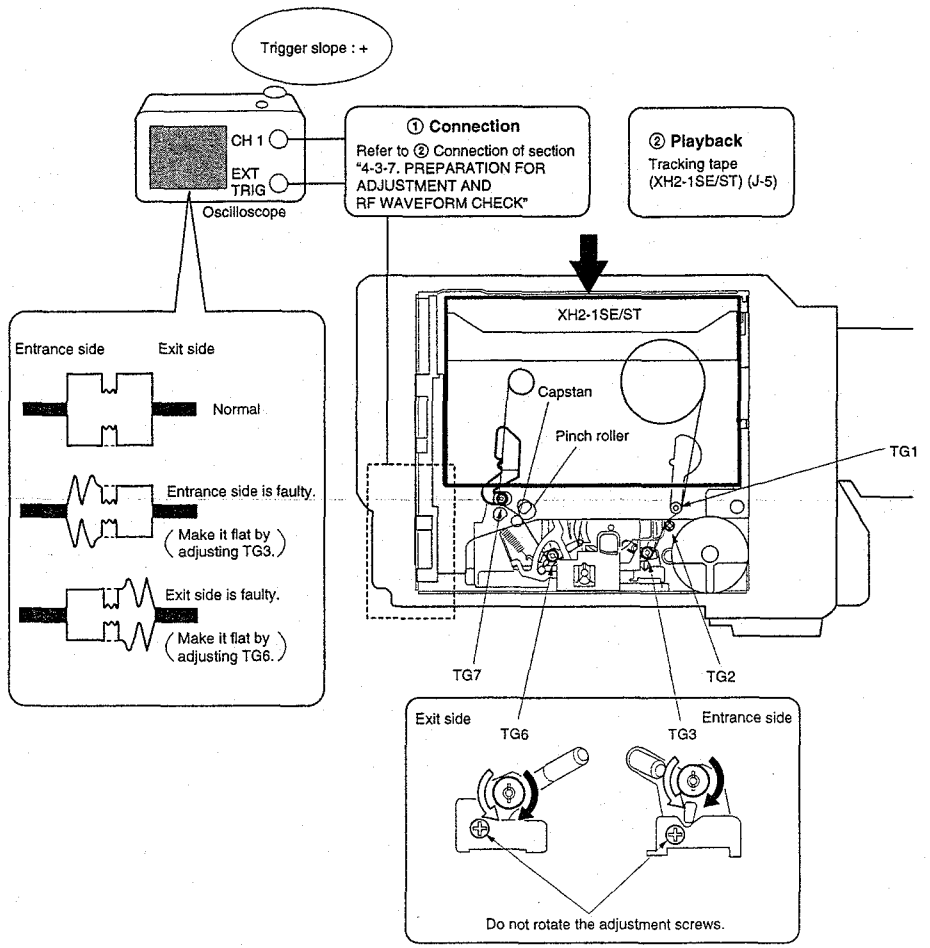

4-3-9. TRACKING CHECK

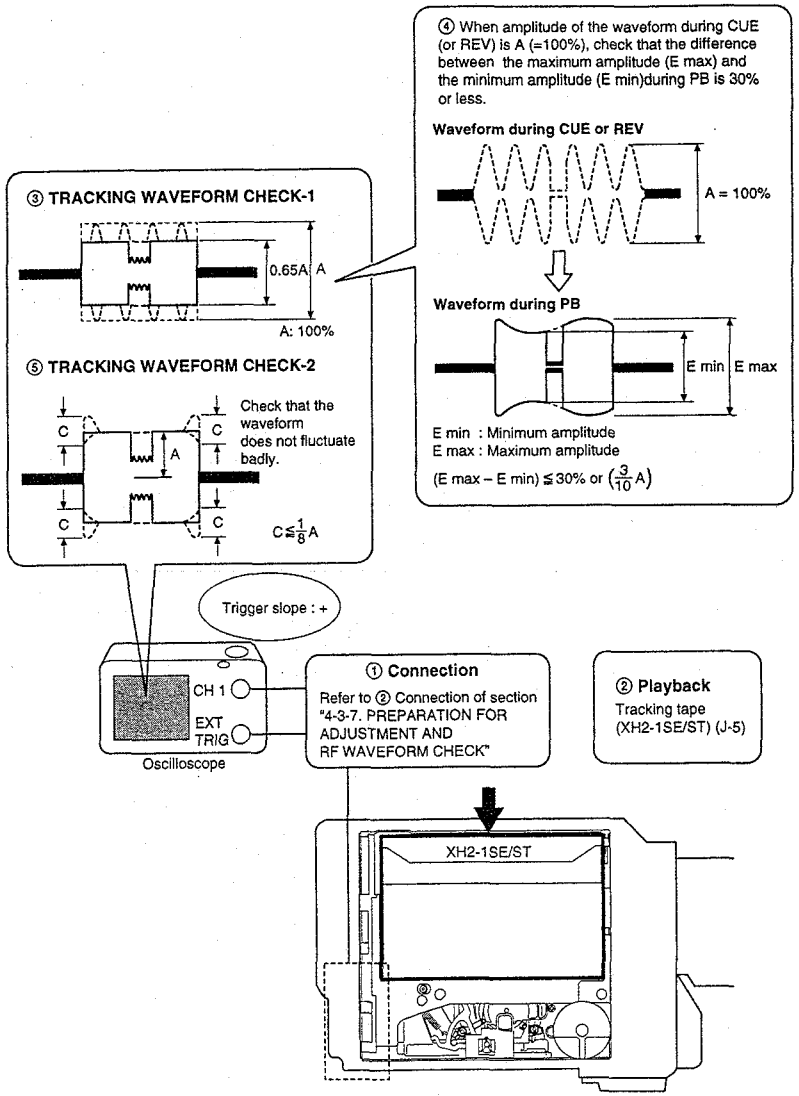

4-3-10. CUE AND REV CHECK

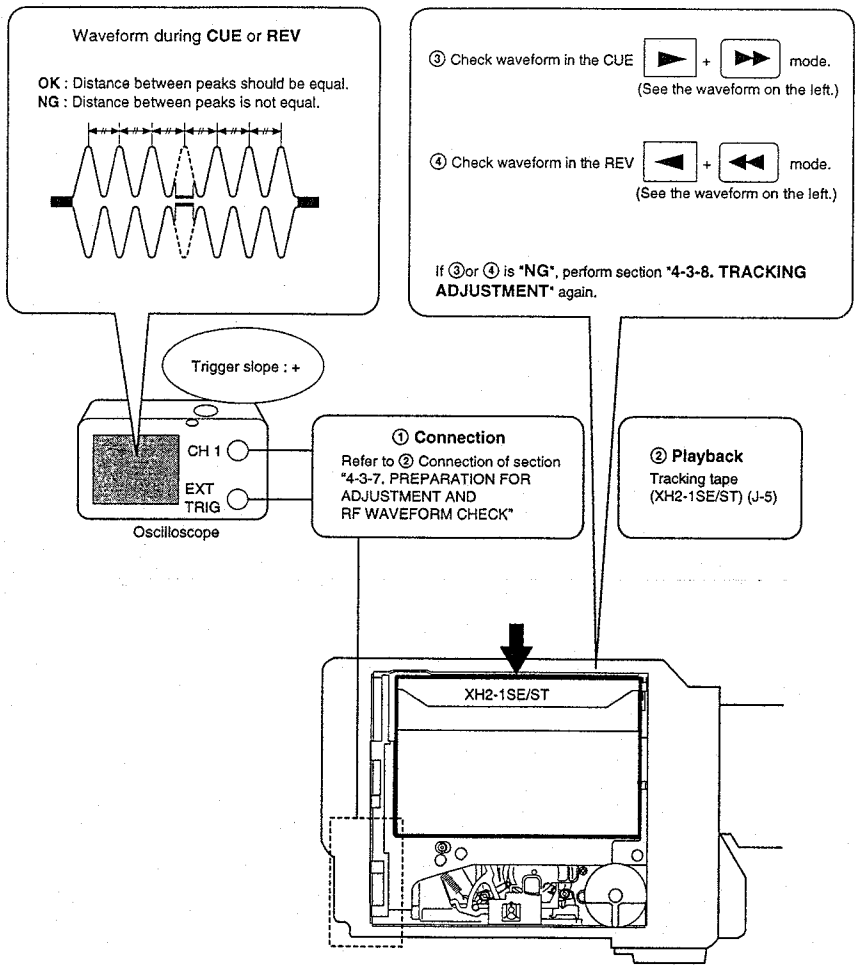

4-3-11. RISING CHECK

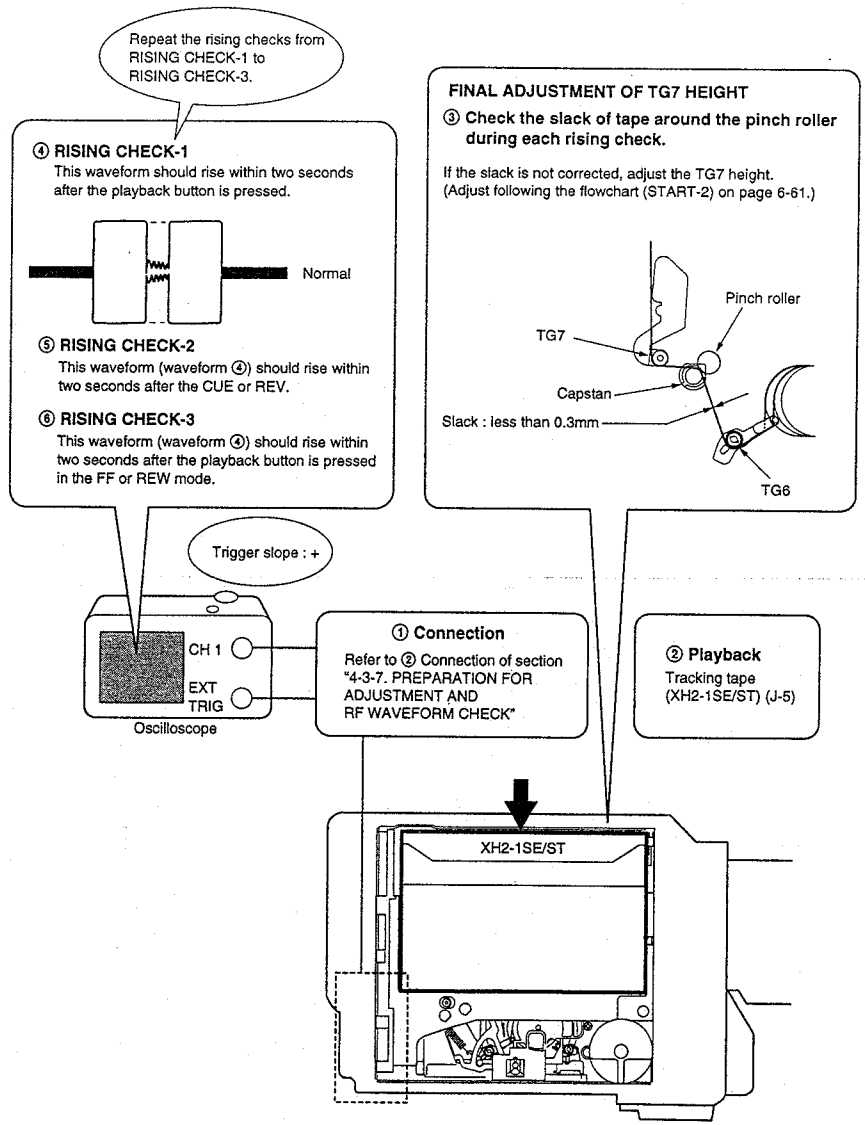

4-3-12. TAPE PATH CHECK

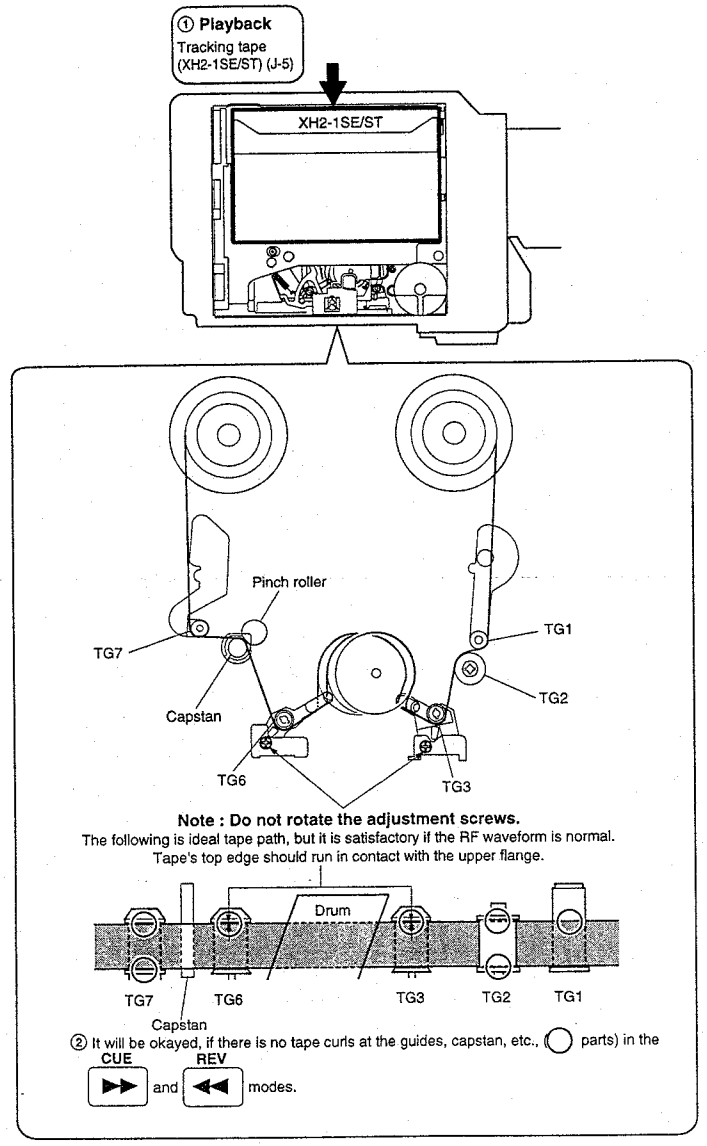

③ After adjustment and check are completed, return the data set by the adjustment remote commander, to the original values.

6-3. VIDEO SECTION ADJUSTMENT

When performing adjustments, refer to the layout diagrams for adjustment related parts beginning from page 6-106.

3-1. PREPARATIONS BEFORE ADJUSTMENT

The following adjustment instruments are used for adjusting the video section.

3-1-1. Equipments to be used

1) TV monitor
2) Oscilloscope : dual trace, band 30MHz or wider, with delay mode. (Use a 10 : 1 probe unless specified otherwise.)
3) Frequency counter
4) Pattern generator with video output terminal
5) Digital voltmeter
6) Audio generator
7) Audio level meter
8) Audio distortion meter
9) Audio attenuator
10) Regulated power supply
11) Alignment tape
    - For tracking top adjustment (XH2-1ST)
      Part code : 8-967-977-02
    - For tracking end adjustment (XH2-1SE)
      Part code : 8-967-977-03
    - For switching and overlap adjustment (XH2-3S)
      Part code : 8-967-977-12
    - For audio operation check (XH5-3PS)
      Part code : 8-967-977-56
    - For system operation check (XH5-5PS)
      Part code : 8-967-977-67
    - BIST reference tape (XH5-6PS)
      Part Code : 8-967-977-77
12) Remote commander for adjustment (J-6082-053-B)
13) CPC 2 jig
    Part Code : J-6082-140-A
14) Power Code
    Part Code : J-6082-223-A

3-1-2. Precautions in adjustments

1) The adjustments of this video camera recorder are performed either in the VTR mode or in the camera mode. The VTR can be established by setting the power switch to the VTR position or by entering the "forced VTR power ON" mode using the adjustment remote commander. (Note 1) The camera mode can be established by setting the power switch to the CAMERA position or by entering the "forced camera + VTR power ON" mode using the adjustment remote commander. (Note 2) After completing adjustments, be sure to exit the "forced VTR power ON mode" or "forced camera + VTR power ON" mode. (Note 3)

Note 1 : How to enter the "forced VTR power ON" mode:
1) Set data : 01 to address : 00 on page : 1.
2) Set data : 02 to address : 03 on page : D, and press the PAUSE button of the adjustment remote commander. If the "forced VTR power ON mode" is established, the VTR power can be turned ON, even though the CABINET (R) ASSY (POWER, VTR/CAM, FOCUS and IRIS switches are mounted in it) is removed. After completing adjustments, be sure to exit the "forced power ON mode".

Note 2 : How to enter the "forced camera + VTR power ON" mode (camera mode) :
1) Set data : 01 to address : 00 on page : 1.
2) Set data : 03 to address : 03 on page : D, and press the PAUSE button of the adjustment remote commander. If the "forced VTR power ON mode" is established, the camera power can be turned ON, even though the CABINET (R) ASSY is removed. After completing adjustments, be sure to exit the "forced power ON mode".

Note 3 : How to exit the "forced power ON mode":
1) Set data : 01 to address : 00 on page : 1.
2) Set data : 00 to address : 03 on page : D, and press the PAUSE button of the adjustment remote commander.
3) Set data : 00 to address : 00 on page : 1.

3-1-3. Adjustment connector (RS-73P board CN775)

Some video section adjustment points are concentrated to the RS-73P board CN775. Connect the measuring equipment via the jig (Multi CPC 2 : J-6082-140-A).

RS-75 board CN775

Pin No.	Signal Name	Pin No.	Signal Name
1	RF MONTR	2	GND
3	ENV OUT	4	REF OUT
5	LOCK	6	JSWP J
7	SYCS	8	ERRP
9	VP CK CS	10	PLAJP
11	AFREF	12	SCDVCS
13	VA DV CS	14	ENV CONST

Table. 6-3-1.

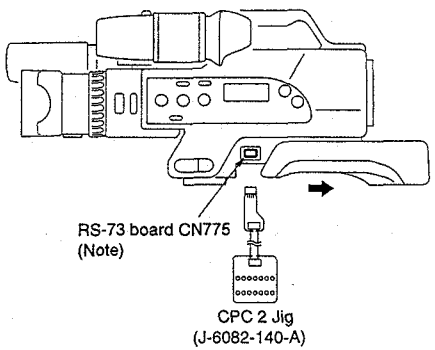

Fig. 6-3-1.

Note : Remove the cover which is attached to the cabinet (R).

3-1-4. Connecting the equipment

Connect the measuring equipment as shown in Fig. 5-3-2 for performing the adjustments.

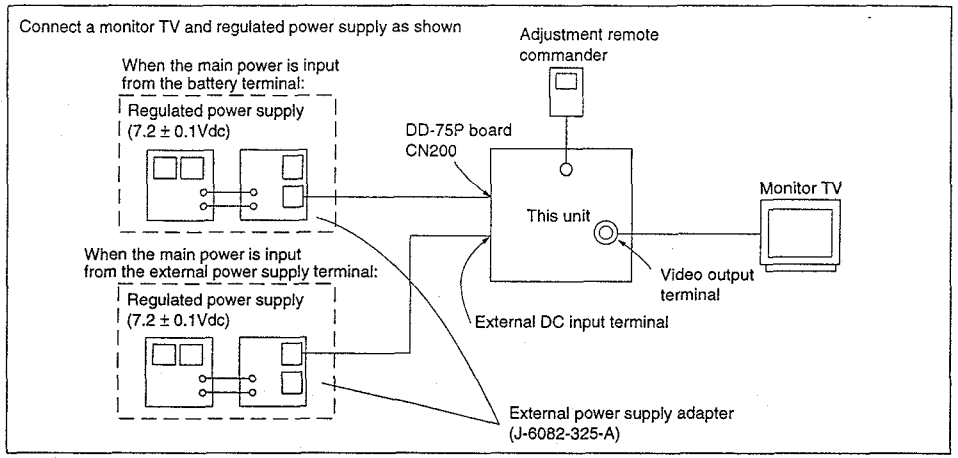

Fig. 6-3-2

The color bar signal which is recorded in the alignment tape.

Note : Measured at video input/output connector (across 75Ω termination).

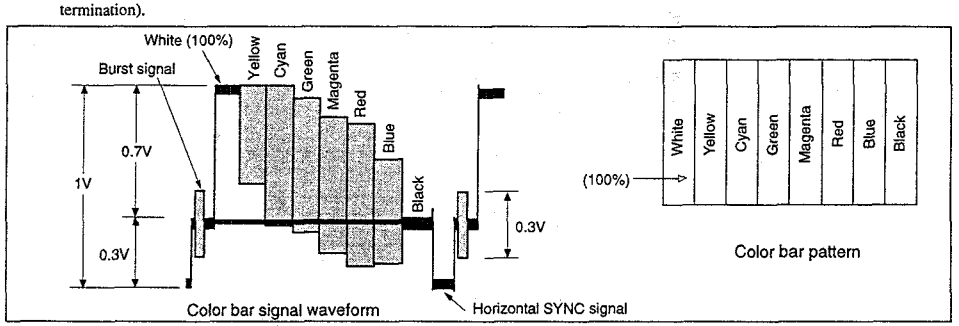

Fig. 6-3-3 Color bar signal of PAL alignment tape

3-1-5. Output level and impedance

Video output	Pin jack Output signal : 1Vp-p, 75Ω unbalanced, sync negative
S video output	4-pin mini DIN Luminance signal : 1Vp-p, 75Ω, unbalanced, sync negative Chrominance signal : 0.3Vp-p (PAL) 75Ω, unbalanced
Audio output	Pin jack Output impedance : 2.2kΩ or less
Audio input	Pin jack Input level –7.5dBs, input impedance more than 47kΩ

3-2. SERVICE MODE

Additional note on adjustment.
Note : After the completion of the all adjustments, cancel the service mode by either of the following ways.

1) Unplug the main power supply and remove the rechargeable button battery (LI-60 board). (In this case , date and time and menu setting have been set by users are canceled. Perform resetting.)
2) After data on pages : D is restored, return data of the address: 00 on page : 1 to 00. And when data on page : 2 or page : 5 is changed, return the data to the original values.

3-2-1. Setting the TEST mode and VTR & CAM mode ON

Mode	Stop
Signal	Any signal
Adjustment Page	D
Adjustment Address	03

* For page D, the set data will be recorded in the nonvolatile memory by pressing the PAUSE button of the adjustment remote commander. Take note that, when the test mode is set, the test mode will not be released even if the main power has been turned off (7.2Vdc).
* Be sure to return this address to data 00 after completing adjustments/repairs and press the PAUSE button of the adjusting remote commander. And set data : 00 to page : 1, address : 00.

Adjustment procedure:

Order	Page	Address	Data	Procedure
1				Set the remote commander (RM-95) to HOLD (adjustment position), and turn on the UNREG power supply.
2	1	00	01	Set the data. (Preparation)
3	D	03		After setting the data as follows in accordance with the test mode, press the PAUSE button.

00	Normal
01	Forced CAMERA Power-ON
02	Forced VTR Power-ON
03	Forced CAMERA +VTR Power-ON

How to cancel the VTR &CAM mode ON.

Order	Page	Address	Data	Procedure
1	D	03	00	After setting the data, press the PAUSE button.
2	1	00	00	Set the data. (End)

3-2-2. Emergency memory address

Page C	Address 30 to 3B

Address	Contents
30	EMG code when the first emergency has occurred.
32	Upper : MSW code of the machine status in which transition has started then the first emergency occurred. Lower : MSW code when the first emergency has occurred.
33	Lower : MSW code of the machine movement target when the first emergency has occurred.
34	EMG code when the second emergency has occurred.
36	Upper : MSW code of the machine status in which transition has started then the second emergency occurred. Lower : MSW code when the second emergency has occurred.
37	Lower : MSW code of the machine movement target when the second emergency has occurred.
38	EMG code when the last emergency has occurred.
3A	Upper : MSW code of the machine status in which transition has started then the last emergency occurred. Lower : MSW code when the last emergency has occurred.
3B	Lower : MSW code of the machine movement target when the last emergency has occurred.

When there are no emergency, data 00 will be written in the above address (30 to 3B). When the first emergency occurs, the data corresponding to the emergency will be written in the first emergency address (30 to 33). In the same way, when the second emergency occurs, the data corresponding to the emergency will be written in the second emergency address (34 to 37).
The data corresponding to the emergency occurring last will be written in the last emergency address (38 to 3B).
Therefore the data of addresses (38 to 3B) are renewed each time an emergency occurs.

Note : Be sure to rewrite the data of addresses 30 to 3B to 00 after repairs/adjustment.

Adjustment procedure:

Order	Page	Address	Data	Procedure
1	1	00	01	Set the data.
2	C	30 31 32 33 34 35 36 37 38 39 3A 3B	00	After setting the data to each address, press the PAUSE button.
3	1	00	00	Set the data.

3-2-3. EMG code (Emergency code)

The emergency codes are stored in the addresses : 10, 14 and 18 corresponding to the type of errors occurred. Types of error code are shown in the following table.

Code	Error Status
00h	No error (Initial state)
10h	Loading motor time-out during loading
11h	Loading motor time-out during unloading
13h	Cassette control motor error
22h	T reel error
23h	S reel error
24h	T reel error (S and T terminals are shorted.)
30h	Capstan start-up error
35h	When finger is pinched and cassette compartment tries to move down 4th/5th times
40h	FG error at drum start-up
42h	FG error during normal rotation of drum
43h	Drum error during loading
50h	Tape winding error of T reel during unloading (reel slack)
51h	S reel tape takeup error in remaining tape calculation during loading

3-2-4. MSW code

- The lower digit data of the page C : address : 32, 36 and 3A indicate the MSW code (mode switch code) when an error occurs.
- The upper digit data of the page C : address : 32, 36 and 3A indicate the MSW code (mode switch code) of mode transition (mode SW code before mode transition) when an error occurs.
- The lower digit data of the page F : addresses : 13, 17 and 1B indicate the MSW code (mode switch code) of transition target (code to which the machine is going to enter) when an error occurs.

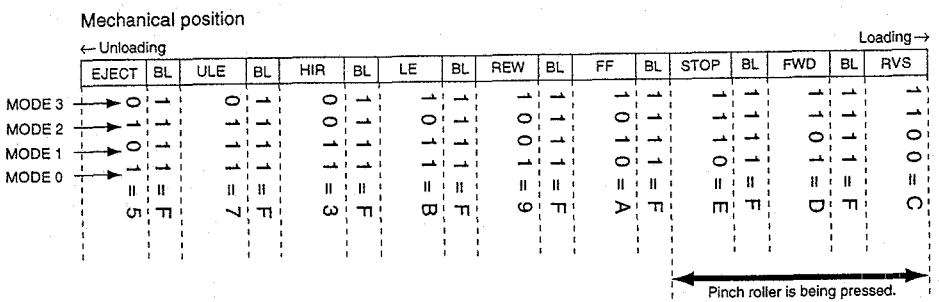

Mechanism Position	MSW Code	Contents
EJECT	5	Eject position. The mechanism comes to this position when the mechanism has ejected a cassette.
BL	F	Blank code. This is the separating code between two codes. The mechanism will not be stopped by this code while operating. (Except for loading and unloading.)
ULE	7	This is the position which the mechanism goes through during loading. This position is close to the EJ position.
HIR	3	This is the position where tension regulators open and tape is brought to contact with drum.
LE	B	This is the position where tape guides have completed tape loading. Torque limiter is turned ON.
REW	9	The rewind position. Pinch roller is detached from capstan in this position. Torque limiter is turned OFF. (Reel and capstan are directly connected.)
FF	A	The fast forward position. Pinch roller is detached from capstan in this position. Torque limiter is turned OFF. (Reel and capstan are directly connected.)
STOP	E	The stop position. Pinch roller is detached from capstan in this position, and brakes are engaged on both reels.
FWD	D	This position allows tape to run in the FWD direction by pressing pinch roller against capstan. The modes such as REC, PB, FWD X 2, CUE and FWD-SLOW, operate at this position. Torque limiter is turned ON.
RVS	C	This position allows tape to run in the FWD direction by pressing pinch roller against capstan. The modes such as R X 1, R X 2, RVS and RVS-SLOW, operate at this position. Torque limiter is turned ON.
NULL	0	This code does not exist in the mechanism deck. When an error occurs while loading motor is not energized, this code is memorized by the error status memory.

3-2-5. Key input check

Bit	Key switch	Switch condition
0	PHOTO REC SW	
1	PHOTO FREEZE SW	
2	EJECT SW	
3	[VTR MODE SW] PLAYER MODE SW	1=OFF
4	PHOTO STBY SW	0=ON
5	CAM START/STOP SW	
6	CC DOWN SW]	
7	CAM+STBY SW	

┌ ─ ┐
└ ─ ┘ : E MODEL

Adjustment procedure:

Order	Page	Address	Data	Procedure
1	0	FF	00	Set the data.
2	2	01		ON or OFF of each key switch can be known from the bit value on display.

3-2-6. Key input check (A/D port)

• VK-41, ED-44, FK-48 boards and FI 4520 block

Display data / Address	00 to 10	11 to 4C	4D to 7E	7F to B1	B2 to E7	E7 to FF
1B (KEY AD IN 0)	(■) STOP (VK-41P board S506)	(◀◀) REW (VK-41P board S507)	(▷) PB (VK-41P board S508)	AUDIO DUB (VK-41P board S509)	(●) REC (VK-41P board S510)	No key input
1C (KEY AD IN 1)	(P) PAUSE (VK-41P board S512)	(▷▷) FF (VK-41P board S513)	SLOW (VK-41P board S514)	FRAME RVS (VK-41P board S515)	FRAME FWD (VK-41P board S516)	
1D (KEY AD IN 2)	EDIT SEARCH + (HOLD DOWN) (ED-44 board S101)	EDIT SEARCH + (ED-44 board S101)	EDIT SEARCH – (HOLD DOWN) (ED-44 board S100)	EDIT SEARCH – (ED-44 board S100)		
1E (KEY AD IN 3)	MENU (VK-41P board S501)	MENU UP (VK-41P board S502)	MENU DOWN (VK-41P board S503)	MENU EXE (VK-41P board S512)		
1F (KEY AD IN 4)	WHITE BALANCE (FS-78 board S601)	FADER/OVERLAP (FS-78 board S602)	CP CHECK (FS-78 board S604)	FOCUS. INFINITY (FI 4520 board)	FOCUS AUTO (FI 4520 board)	FOCUS MANUAL (FK4520 board)
20 (KEY AD IN 5)	ZERO SET MEMORY (FK-68 board S414)			DIGITAL MODE OVERLAP (FK-68 board S417)		DIGITAL MODE ZOOM/16:9 WIDE (FK-68 board S417)
21 (KEY AD IN 6)				AUTO LOCK ON (AM-38 board S004)	AUTO LOCK OFF (AM-38 board S004)	

[ ] : E MODEL

Operating procedure:

Order	Page	Address	Data	Procedure
1	0	FF	00	Set the data.
2	2	1B, 21		The pressed key can be known from the displayed data of each address.
3	0	FF	00	Set the data.

3-2-7. LCD display check (FK-68 board)

Order	Page	Address	Data	Procedure
1	2	0B	10	After setting the data and press the PAUSE button. (Note 1)
2				Check that all of the TALLY LEDs (front, rear and inside EVF) and audio peak LED, light
3	2	0B	08	After setting the data and press the PAUSE button
4				Check that all of the TALLY LEDs (front, rear and inside EVF) and audio peak LED, are extinguished.
5	2	0B	00	After setting the data and press the PAUSE button.
6	5	00		Read the data of this address and record it. (Note 2)
7	5	00	08	Set bit 3 of the data to "1", bit 6 to "0". After setting the data, press the PAUSE button.
8				All segments of the LCD illuminate.
9	5	00	40	Set bit 3 of the data to "0", bit 6 to "1". After setting the data, press the PAUSE button.
10				All segments of the LCD are turned off, except the residual BATT marking and the no tape marking.
11	5	00		Set the data which is read and recorded in step 6 to this address using the adjustment remote commander, and press the PAUSE button. (End)

Note 1 : This is to control the mode control.
Note 2 : This is to control the HI control.

3-2-8. Buzzer check

Order	Page	Address	Data	Procedure
1	2	25	01	After setting the data, press the PAUSE button.
2				Check that the buzzer of about 8kHz sounds.
3	2	25	02	After setting the data, press the PAUSE button.
4				Check that the buzzer of about 4kHz sounds.
5	2	25	03	After setting the data, press the PAUSE button.
6				Check that the buzzer of about 2kHz sounds.
7	2	25	00	After setting the data, press the PAUSE button. (End)

3-2-9. Use history check

Page 2	Address 39 to 3C

Address	Function		Remarks
39	Accumulated drum rotation time (BCD code)	Hour	10th digit and 1st digit of the accumulated time (decimal numbers)
3A		×100 Hour	1000th digit and 100th digit of the accumulated time (decimal numbers)
3B	Numbers of tape eject (BCD code)	times	
3C		×100 times	

How to use:

1) The record of use data is displayed at addresses : 39 to 3C on page 2.

Note : This data will be cleared when the button battery is removed (reset). Be sure to read the data before disassembling the set.

3-2-10. Oscillating frequency check (DD-75P board)

Purpose : Check the oscillating frequency of switching regulator.

Subject	Not required
Measurement Point	Q016 pin ④ and pin ⑤ on DD-75P board
Measuring Instrument	Frequency counter and oscilloscope
Specification Value	445 ± 30kHz

Adjustment procedure:

Order	Procedure
1	Confirm that the oscillating frequency satisfies the specification value.

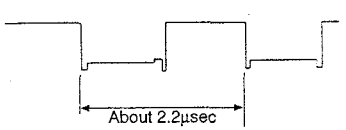

Fig. 6-3-4

3-2-11.Power supply voltage check (DD-75P board)

Mode	Camera record
Subject	Any Subject
Measuring Equipment	Digital voltmeter
INDI 3.0V check	
Measuring Point	CN001 pin ⑯ and ⑰ (CL006)
Specification Value	2.90 ± 0.11Vdc
J1 3.0V check	
Measuring Point	CN001 pin ⑲ and ⑳ (CL007)
Specification Value	2.90 ± 0.11Vdc
J2 3.0V check	
Measuring Point	CN001 pin ㉒ to ㉔ (CL008)
Specification Value	2.90 ± 0.11Vdc
SS 5.0V check	
Measuring Point	CN001 pin ㉖ and ㉗ (CL009)
Specification Value	4.75 ± 0.15Vdc
AUDIO 5.0V check	
Measuring Point	CN001 pin ㉙ (CL010)
Specification Value	4.75 ± 0.15Vdc
AUDIO 3.3V check	
Measuring Point	CN001 pin ㉛ (CL011)
Specification Value	3.10 ± 0.12Vdc
AUDIO 3.0V check	
Measuring Point	CN001 pin ㉝ (CL012)
Specification Value	2.90 ± 0.11Vdc
SS 15V check	
Measuring Point	CN001 pin ㉟ (CL013)
Specification Value	15.00 ± 0.50Vdc
SS 3.3V check	
Measuring Point	CN001 pin ㊲ (CL014)
Specification Value	3.20 ± 0.12Vdc
EVF 5.0V, VIDEO 5.0V check	
Measuring Point	CN002 pin ④ and ⑧ (CL015)
Specification Value	4.75 ± 0.15Vdc
MAGIC 3.3V check	
Measuring Point	CN002 pin ⑰ and ⑱ (CL016)
Specification Value	3.10 ± 0.12Vdc

CAM 3.3V check	
Measuring Point	CN002 pin ⑳ and ㉑ (CL017)
Specification Value	3.20 ± 0.12Vdc
CAM D5.0V check	
Measuring Point	CN002 pin ㉕ and ㉖ (CL019)
Specification Value	4.90 ± 0.15Vdc
CAM 5.0V check	
Measuring Point	CN002 pin ㉗ to ㉙ (CL020)
Specification Value	4.90 ± 0.15Vdc
CCD –8.5V check	
Measuring Point	CN002 pin ㉜ (CL021)
Specification Value	–8.5 ± 0.50Vdc
CCD 15V check	
Measuring Point	CN002 pin ㉝ and ㉞ (CL022)
Specification Value	15 ± 0.50Vdc
VAP 5.0V check	
Measuring Point	CN002 pin ㊲ (CL024)
Specification Value	5.00 ± 0.15Vdc
CAM MT 5.0V check	
Measuring Point	CN002 pin ㊳ (CL025)
Specification Value	5.00 ± 0.15Vdc
RP 3.3V check	
Measuring Point	CN002 pin ② (CL027)
Specification Value	3.20 ± 0.12Vdc
RP 5.0V check	
Measuring Point	CN003 pin ⑤ (CL028)
Specification Value	4.75 ± 0.15Vdc
RP 3.0V check	
Measuring Point	CN003 pin ⑩ (CL029)
Specification Value	2.90 ± 0.11Vdc
RP 6.6V check	
Measuring Point	CN003 pin ⑨ and ⑪ (CL030)
Specification Value	6.30 ± 0.25Vdc
EVER 3.2V check	
Measuring Point	IC500 pin ⑥ (CL512)
Specification Value	3.2 ± 0.14Vdc

3-3. SYSTEM CONTROL ADJUSTMENT

3-3-1. Initialization of Page D

If the D page data is deleted by some reasons, input the initial values of the D page data, then start adjustment. Refer to "Page D address list" on page 3-84.

Mode	STOP
Signal	Any signal
Adjustment Page	D
Adjustment Address	00 to 53

Adjustment procedure:

Order	Procedure
1	Set the data : 01 to address : 00 on page : 1.
2	Select the page D, and input the initial value to each address. (After setting the data (initial values), be sure to press the PAUSE button of the adjustment remote commander before changing each address.)
3	Set the data : 00 to address : 00 on page : 1.

3-3-2. Initialization of Page C data

Note : If the C page data initialization is performed, all adjustments of the RF block and "Switching position adjustment" of the SERVO SYSTEM ADJUSTMENT must be performed again.

Mode	STOP
Adjustment Page	C
Adjustment Address	00 to 6F

Adjustment procedure:

Order	Procedure
1	Set the data : 01 to address : 00 on page : 1.
2	Set the data : 01 to address : 02 on page : 4 and press the PAUSE button of the adjustment remote commander.
3	Confirm that the data of the address : 02 on page : 4 changes in the order of "01" → "03" → "05" → "00". The data from address : 00 to address : 6F on page : C are updated to the initial data.
4	Set the data : 00 to address : 00 on page : 1.

Note : Recording the data of page: C by taking note, is recommended before initializing the page: C.

3-3-3. Page D address list

Note 1 : The initial value of the adjustment data is the data immediately after execution of Page D data initialization, and Page D data modification. They are different from the value after all adjustments are executed.

Note 2 : When the arrow mark ← is shown in the memo column of the adjustment data, it indicates that the data of that address is the fixed data (fixed to the initial value).

Address	Adjustment Data	
	Initial Value	Memo Column
00		
01		
02	50	←
03	00	←
04	00	←
05	00	←
06	6D	←
07	72	←
08	80	←
09	89	←
0A	8E	←
0B	75	←
0C	08	←
0D	00	←
0E	00	←
0F	06	←
10	00	←
11	84: AEP, UK 14: E	←
12	68	←
13	1C	←
14	0C	←
15	00	←
16	21	←
17	25	←
18	19	←
19	82	←
1A	54	←
1B	34	←
1C	28	←
1D	26	←
1E	00	←
1F	11	←
20	65	←
21	43	←
22	F8	←
23	3F	←
24	72	←
25	00	←
26	FF	←
27	FF	←
28	FF	←
29	00	←
2A	80	←
2B	40	←

Table. 6-3-1 (1)

Address	Adjustment Data	
	Initial Value	Memo Column
2C	01	←
2D	01	←
2E	00	←
2F	00	←
30	00	←
31	08	←
32	00	←
33	46	←
34	22	←
35	21	
36	46	←
37	7A	←
38	00	←
39	80	←
3A	6D	←
3B	72	←
3C	7F	←
3D	89	←
3E	8E	←
3F	77	←
40	0A	←
41	04	←
42		
43		
44		
45		
46		
47		
48	D0	
49	7C	
4A	B3	
4B	00	
4C	D4	
4D	6D	
4E	9D	
4F	9D	
50	3E	
51	7C	
52	5C	
53	FF	

Table. 6-3-1 (2)

3-3-4. ID board threshold level adjustment (JC-15P board)

Mode	STOP
Adjustment Page	D
Adjustment Address	2A, 2B

Connection :Eject a cassette and perform the following connection.

1) Connect CN403 pin ⑥⑤ (CL473 : CHIME SDA) with GND (CL531, etc.) using a resistor of 645Ω (accuracy ± 1%).
   Fabricate a resistor of 645Ω as follows :
   645Ω = 620Ω + 15Ω +10Ω
   620Ω resistor (1-215-416-00)
   15Ω resistor (1-215-377-00)
   10Ω resistor (1-215-373-31)

2) Connect CN403 pin ⑥④ (CL474 : CHIME SCK) with GND (CL531, etc.) using a resistor of 3300Ω (accuracy ± 1%).
   3300Ω resistor (1-215-433-00)

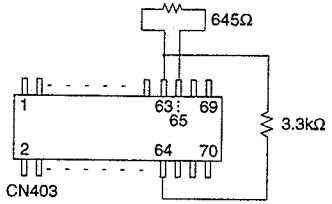

Fig. 6-3-5

Operating procedure:

Order	Page	Address	Data	Procedure
1	1	00	01	Set the data. (Preparation)
2	5	00	10	After setting the data, press the PAUSE button.
3	5	07	3	Read the data of address : 07 on page : 5. Take this value as D_{07}. (D_{07} is in the range from "10" to "54".)
4	D	2B		Set the data D_{07} to this address and press the PAUSE button .
5	5	08		Read the data of address : 08 on page : 5. Take this value as D_{08}. (D_{08} is in the range from "60" to "9D".)
6	D	2A		Set the data D_{08} to this address and press the PAUSE button.
7	5	00	38	After setting the data, press the PAUSE button.
8	1	00	00	Set the data. (END)

3-3-5. Battery down adjustment

Purpose : Set the battery end voltage.
Adjustment Error : If the voltage is incorrect, the remainder of the battery will be shorter. The image at the battery end will also lose sync.

Mode	Camera record
Signal	any
Measurement Point	LCD display of the adjustment remote
Measuring Instrument	control unit.
Adjustment Page	D
Specified Value	07 to 0B, 3A to 3F

Switch setting
1) FOCUS switch (FI4520 board) ..... MANUAL

Connection:
1) Connect the regulated power supply and the digital voltmeter to the battery terminal as shown in Fig. 6-3-6.

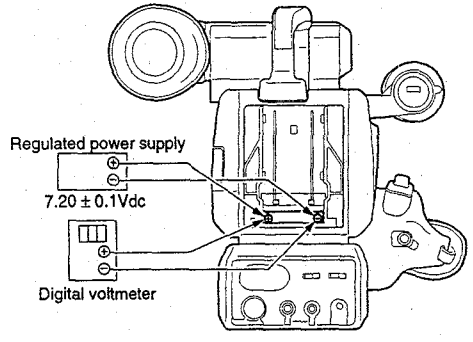

Fig. 6-3-6

Adjustment procedure:

Order	Page	Address	Data	Procedure
1				Adjustment the output voltage of the regulated power supply so that the display is 7.20 ± 0.1 Vdc.
2				Load a cassette, and set the unit to the camera recording mode.
3	1	00	01	Set the data.
4				Decrease the output voltage of the regulated power supply so that the digital voltmeter display is 5.80 ± 0.05 Vdc.
5	2	1A		Read the adjusting remote commander display data, and this data is named Dref.
6				Convert the data Dref into the decimal numbers. The resuit decimal number is Dref '. (Use page 6-37 (How to convert the hexadecimal number to decimal number) "Hexadecimal-Decimal Conversion Table".)
7				Calculate the difference between the data and the reference value using ΔDref ' the following equation. ΔDref '=Dref '−109
8	D	07 08 09 0A 0B 3A 3B 3C 3D 3E 3F		Calculate the following equations (decimal number calculation) using Dref ' for each address. Address 07 D_{07}' = ΔDref ' + 114 08 D_{08}' = ΔDref ' + 128 09 D_{09}' = ΔDref ' + 137 0A D_{0A}' = ΔDref ' + 142 0B D_{0B}' = ΔDref ' + 117 3A D_{3A}' = ΔDref ' + 109 3B D_{3B}' = ΔDref ' + 114 3C D_{3C}' = ΔDref ' + 127 3D D_{3D}' = ΔDref ' + 137 3E D_{3E}' = ΔDref ' + 142 3F D_{3F}' = ΔDref ' + 119 Convert the above eleven decimal numbers to the eleven hexadecimal numbers. Set the hexadecimal data to each address and press PAUSE each time.
9	1	00	00	Set the data.

3-4. SERVO SYSTEM ADJUSTMENTS

3-4-1. Switching position adjustment (RS-73P board)

Purpose: Removes the mechanical error of head assembly by electronic means.
Adjustment error: Skew picture

Mode	VTR playback
Signal	SW/OL alignment tape (XH2-3S)
Measurement Point	Display data at address : 08 and address : 09 of page : 3 and oscilloscope
Measuring Instrument	CH-1 : CN775 pin ① (RF MONITOR) (Note 1) CH-2 : CN775 pin ⑥ (JSWP) TRIG : CH-2
Adjustment Page	C
Adjustment Address	4C to 4F
Specification Value	T1 = 141μsec, T2 = 141μsec

Note 1 : Connect a 75Ω resistor between CN775 pin ① and pin ②.

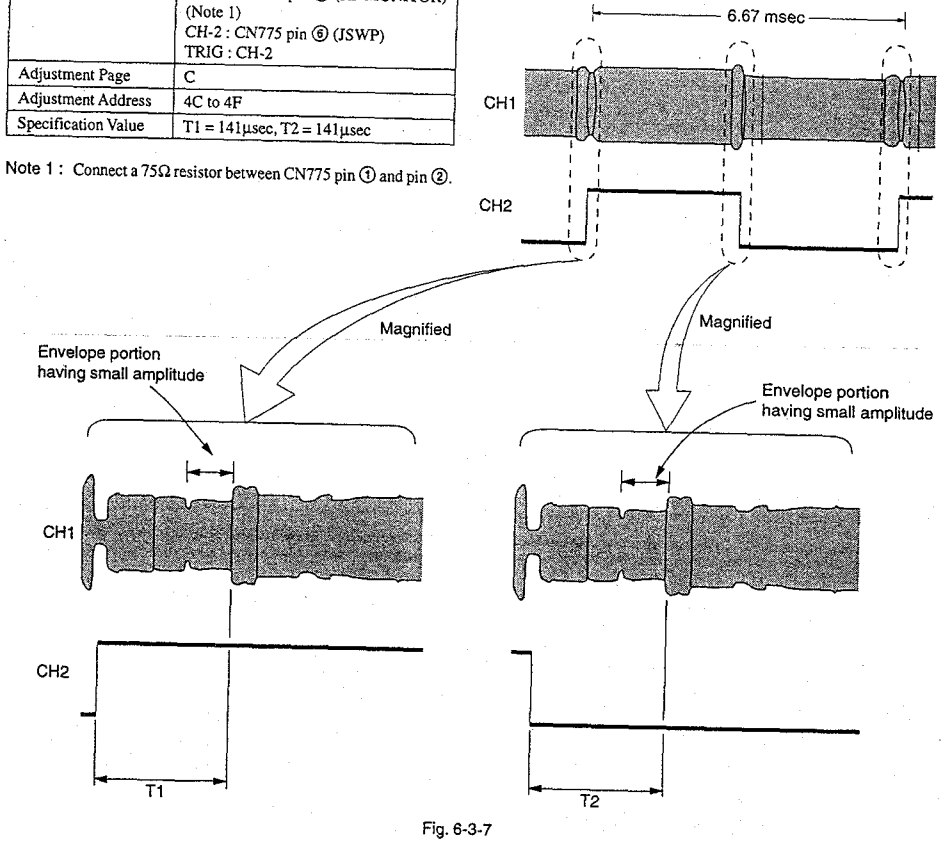

Fig. 6-3-7

Adjustment procedure:

Order	Page	Address	Data	Procedure
1	1	00	01	Set the data. (Preparation)
2	3	01	03	After setting the data, press the PAUSE button.
3	C	4C to 4F	00	Write data : 00 to address : 4C to 4F on page : C. (To write the data, press the PAUSE button of the adjustment remote commander every time when data is set.)
4	C	4C		Change the data of address : 4C on page : C until T1 satisfies the specification value of 141 µsec. Press the PAUSE button. (Note 2)
5	3	08		Read the displayed data of address : 08 on page : 03 several times. Take the average value which is named D08. Take any of the following measures depending upon the D08 value : [When D_{08} value is in the range from "80" to "FF"] Calculate the correction value, and deduct it from the data of the address : 4C on page : C. (To write the data, press the PAUSE button of the adjustment remote commander after data is changed.) Correction value = FF – D_{08} value (Hexadecimal calculation. Refer to the conversion table between D08/D09 and correction value at nearly end of this adjustment item.) [When D_{08} value is in the range from "00" to "7E"] Add D08 to the data of address : 4C of page : C. (To write the data, press the PAUSE button of the adjustment remote commander after data is changed.) [When D_{08} value is "7F"] Repeat this adjustment from step 4 of this adjustment.
6	3	08		Observe the displayed data of address : 08 on page : 3. Confirm that the value in the range from "F8" to "FF" and the value in the range of "00" to "08" appear alternately and equally. (In the case if the data changes rapidly so that the lower two digits cannot be read, check that numbers "0" and "F" appear alternately and equally in the upper digits. If they do not, repeat adjustment from step 4.)
7	C	4E		Change the data of address : 4E on page : C until T2 satisfies the specification value of 141 µsec. Press the PAUSE button.
8				Read the displayed data of address : 09 on page : 03 several times. Take the average value which is named D09. Take any of the following measures depending upon the D09 value : [When D_{09} value is in the range from "80" to "FF"] Calculate the correction value, and deduct it from the data of the address : 4E on page : C. (To write the data, press the PAUSE button of the adjustment remote commander after data is changed.) Correction value = FF – D_{09} value (Hexadecimal calculation. Refer to the conversion table between D08/D09 and correction value at nearly end of this adjustment item.) [When D_{09} value is in the range from "00" to "7E"] Add D09 to the data of address : 4E of page : C. (To write the data, press the PAUSE button of the adjustment remote commander after data is changed.) [When D_{08} value is "7F"] Repeat step 7 of this switching position adjustment again because "7F" is caused by adjustment error. (Note 3)
9	3	09		Observe the displayed data of address : 09 on page : 3. Confirm that the value in the range from "F8" to "FF" and the value in the range of "00" to "08" appear alternately and equally. (In the case if the data changes rapidly so that the lower two digits cannot be read, check that numbers "0" and "F" appear alternately and equally in the upper digits. If they do not, repeat adjustment from step 7.)

Note 2 : When the displayed data remains unchanged at "7F" even through the adjustment is repeated several times, perform section "3-5-1. RF block adjustment" of "3-5. VIDEO SYSTEM ADJUSTMENT", then repeat the "3-4-1. Switching position adjustment".
If the displayed data remains unchanged at "7F", and adjustments do not work, IC774 may be defective.

Note 3 : If T1 does not satisfy the specification value even though the data of address : 4C is changed, change the data of address : 4D too.

Conversion table between D_{08}/D_{09} and correction value:

D_{08} or D_{09}	FE	FD	FC	FB	FA	F9	F8	F7F	F6	F5	F4	F3	F2	F1	F0
Correction value (hexadecimal number)	1	2	3	4	5	6	7	8	9	A	B	C	D	E	F

Processing after adjustment:

Order	Page	Address	Data	Procedure
1	3	01	00	After setting the data, press the PAUSE button.
2	1	00	00	Set the data. (End)

3-5. VIDEO SYSTEM ADJUSTMENTS

3-5-1. RF block adjustment (RS-73P board)

1. Record current adjustment/ frequency response check

Mode	VTR stop
Measurement Point	For odd channel adjustment : CH-1 : CN771 pin ⑤ (CL816) CH-2 : CN771 pin ⑥ (CL815) For even channel adjustment : CH-1 : CN771 pin ⑧ (CL813 CH-2 : CN771 pin ⑨ (CL812)
Measuring Instrument	Oscilloscope ADD mode CH-2 INV mode
Adjustment Page	C
Adjustment Address	3E, 3F
Specification Value	A = 3.1 ± 0.1Vp-p

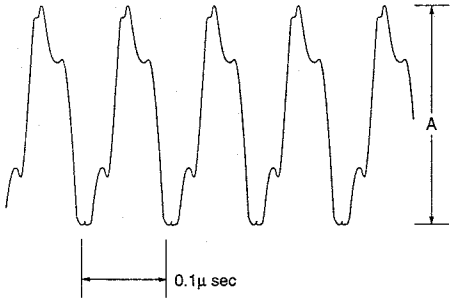

Fig. 6-3-8

Connection :

Remove CN771 and perform the following connection.

1) For odd channel adjustment, connect a resistor of 180Ω between CN771 pin ⑤ (CL816) and CN771 pin ⑥ (CL815).
2) For even channel adjustment, connect a resistor of 180Ω between CN771 pin ⑧ (CL813) and CN771 pin ⑨ (CL812).
   180Ω resistor (Sony part code : 1-249-408-11)

Adjustment procedure:

Order	Page	Address	Data	Procedure
1				Calibrate the VERT gain of CH-1 and CH-2 of an oscilloscope for unity gain. Set the scope to ADD mode. Set CH-2 to INV mode.
2	1	00	01	Set the data. (Preparation)
3	3	01	0C	After setting the data, press the PAUSE button.
4	3	34	35	After setting the data, press the PAUSE button.
5	C	3F 3E		Change the following data until the signal voltage "A" satisfies the specification value and press the PAUSE button. For odd channel : Address : 3F on page C For even channel : Address : 3E on page C.
6	3	34	84	After setting the data, press the PAUSE button.
7				Check that the signal voltage "A" of odd and even channels satisfies the specification value.

Processing after Adjustments:

Order	Page	Address	Data	Procedure
1	3	34	80	After setting the data, press the PAUSE button.
2	3	01	00	After setting the data, press the PAUSE button.
3	C	5C	00	After setting the data, press the PAUSE button.
4	1	00	00	Set the data. (End)

2. PLL fo adjustment (RS-73P board)

Mode	VTR stop
Measurement Point	The displayed data of address : 04 on
Measuring Instrument	page : 3
Adjustment Page	C
Adjustment Address	3D, 3C
Specification Value	The displayed data is in the range from "FD" to "FF", or in the range from "00" to "03". ("FF" and "00" are the center values.)

Adjustment procedure:

Order	Page	Address	Data	Procedure
1	1	00	01	Set the data. (Preparation)
2	3	01	05	After setting the data, press the PAUSE button.
3	3	36	0E	After setting the data, press the PAUSE button.
4	3	04		Take reading of the displayed data of address : 04 on page : 3 several times and take the average value which is taken as D_{04}. Confirm that D_{04} is in the range from "FD" to "FF" or from "00" to "03".
5	C	3C		If D04 is not in the specified range in step 4, adjust the data of address : 3C on page : C as follows and check the result again. [When D_{04} is in the range from "80" to "FC"] Decrease the data of address : 3C on page : C. (To write the data, press the PAUSE button of the adjustment remote commander after data is changed.) [When D_{04} is in the range from "04" to "7F"] Increase the data of address : 3C on page : C. (To write the data, press the PAUSE button of the adjustment remote commander after data is changed.)
6	3	36	0F	After setting the data, press the PAUSE button.
7	3	04		Confirm that the average data D_{04} of address : 04 on page : 3 is in the range from "FD" to "FF" or from "00" to "03".
8	C	3D		If D04 is not in the specified range in step 7, adjust the data of address : 3D on page : C as follows and check the result again. [When D_{04} is in the range from "80" to "FC"] Decrease the data of address : 3D on page : C. (To write the data, press the PAUSE button of the adjustment remote commander after data is changed.) [When D_{04} is in the range from "04" to "7F"] Increase the data of address : 3D on page : C. (To write the data, press the PAUSE button of the adjustment remote commander after data is changed.)

Processing after Adjustments:

Order	Page	Address	Data	Procedure
1	3	01	00	After setting the data, press the PAUSE button.
2	3	36	04	After setting the data, press the PAUSE button.
3	1	00	00	Set the data. (End)

3. CLK DELAY adjustment (RS-73P board)

Mode	Camera record/playback
Subject	Any Subject
Signal	Playback signal of a pre-recorded tape
Measurement Point	CH-1 : CN775 pin ⑧ (ERRP) CH-2 : CN775 pin ⑥ (JSWP)
Measuring Instrument	Oscilloscope Triggered from : CH-2
Adjustment Page	C
Adjustment Address	47

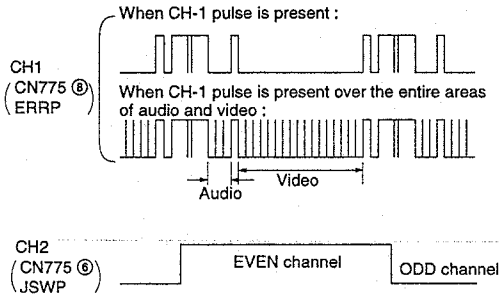

Fig. 6-3-9 (1)

[Actual waveform]

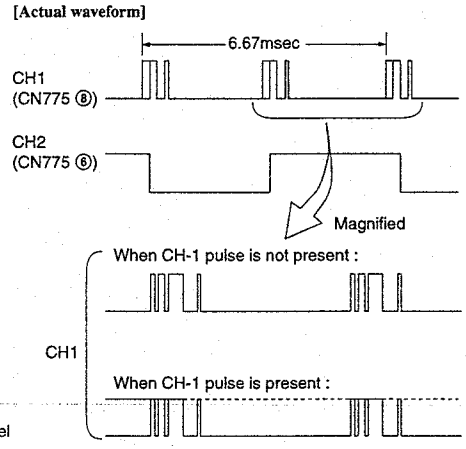

Fig. 6-3-9 (2)

Adjustment procedure:

Order	Page	Address	Data	Procedure
1				Record any camera picture for about two minutes on any tape.
2	1	00	01	Set the data.
3	C	40	C0	After setting the data, press the PAUSE button.
4	C	41	C0	After setting the data, press the PAUSE button.
5	C	42	90	After setting the data, press the PAUSE button.
6	C	43	90	After setting the data, press the PAUSE button.
7	C	47	F0	After setting the data, press the PAUSE button.
8	C	4B	8E	After setting the data, press the PAUSE button.
9	C	5A	00	After setting the data, press the PAUSE button.
10				Playback the segment of a tape which is recorded in step 1.
11	C	47		Increase the data and read the data D_1 when the CH-1 data appears over the entire areas of audio and video.
12	C	47		Decrease the data and read the data D_2 when the CH-1 data appears over the entire areas of audio and video.
13				Obtain the average value between D_1 and D_2, and take it as D_3.
14	C	47		Set D_3 to this address and press the PAUSE button.
15	C	4B	0E	After setting the data, press the PAUSE button.
16	C	5A	84	After setting the data, press the PAUSE button.
17	1	00	00	Set the data.

Processing after Adjustments:

- Perform section "6. AEQ adjustment" after this adjustment is completed.

4. AGC center level adjustment (RS-73P board)

Mode	Camera record/playback
Subject	Any Subject
Signal	Playback signal of a pre-recorded tape
Measurement Point	CH-1 : CN775 pin ⑧ (ERRP) CH-2 : CN775 pin ⑥ (JSWP)
Measuring Instrument	Oscilloscope Triggered from : CH-2
Adjustment Page	C
Adjustment Address	44

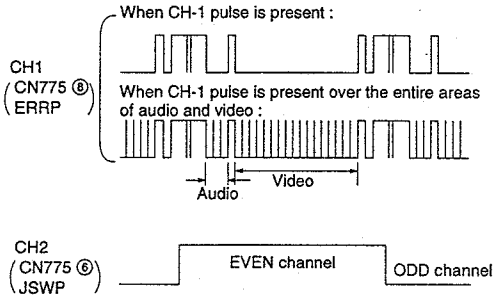

Fig. 6-3-10 (1)

[Actual waveform]

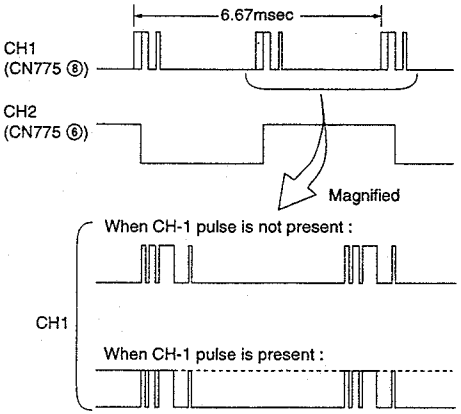

Fig. 6-3-10 (2)

Adjustment procedure:

Order	Page	Address	Data	Procedure
1				Record any camera picture for about two minutes on any tape.
2	1	00	01	Set the data.
3	C	40	C0	After setting the data, press the PAUSE button.
4	C	41	C0	After setting the data, press the PAUSE button.
5	C	42	90	After setting the data, press the PAUSE button.
6	C	43	90	After setting the data, press the PAUSE button.
7	C	44	60	After setting the data, press the PAUSE button.
8	C	4B	8E	After setting the data, press the PAUSE button.
9	C	5A	00	After setting the data, press the PAUSE button.
10				Playback the segment of a tape which is recorded in step 1.
11	C	44		Increase the data and read the data D_1 when the CH-1 data appears over the entire areas of audio and video.
12	C	44		Decrease the data and read the data D_2 when the CH-1 data appears over the entire areas of audio and video.
13				Obtain the average value between D_1 and D_2, and take it as D_3.
14	C	44		Set D_3 to this address and press the PAUSE button.
15	C	4B	0E	After setting the data, press the PAUSE button.
16	C	5A	84	After setting the data, press the PAUSE button.
17	1	00	00	Set the data.

Processing after Adjustments:

- Perform section "6. AEQ adjustment" after this adjustment is completed.

5. PLL capture range adjustment (RS-73P board)

Mode	Camera record/playback
Subject	Any Subject
Signal	Playback signal of a pre-recorded tape
Measurement Point	CH-1 : CN775 pin ⑧ (ERRP) CH-2 : CN775 pin ⑥ (JSWP)
Measuring Instrument	Oscilloscope Triggered from : CH-2
Adjustment Page	C
Adjustment Address	46

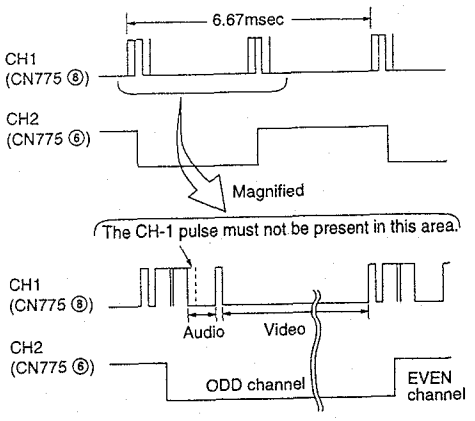

Fig. 6-3-11

Adjustment procedure:

Order	Page	Address	Data	Procedure
1				Record any camera picture for about two minutes on any tape.
2	1	00	01	Set the data.
3	C	4B	8E	After setting the data, press the PAUSE button.
4	C	5A	00	
5				Playback the segment of a tape which is recorded in step 1.
6	C	46	80	After setting the data, press the PAUSE button.
7	C	46	60	After setting the data, press the PAUSE button
8				Confirm that the pulse is not present at the top of audio area of odd channel of the CH-1 ERRP waveform on an oscilloscope.
9	C	46	A0	After setting the data, press the PAUSE button.
10				Confirm that the pulse is not present at the top of audio area of odd channel of the CH-1 ERRP waveform on an oscilloscope. When the steps 8 and 9 are confirmed, proceed to step 15.
11	C	46		If pulse is present in steps 8 and 9, increase the data from "80" and read the data D_1 when pulse starts to appear at the top of the audio area of the CH-1 data.
12	C	46		Decrease the data from "80" and read the data D_2 when pulse starts to appear at the top of the audio area of the CH-1 data.
13				Obtain the average value between D_1 and D_2, and take it as D_3.
14	C	46		Set D_3 to this address and press the PAUSE button.
15	C	4B	0E	After setting the data, press the PAUSE button.
16	C	5A	84	After setting the data, press the PAUSE button.
17	1	00	00	Set the data.

6. AEQ adjustment (RS-73P board)

Mode	Camera record/playback
Subject	Any Subject
Measurement Point	
Measuring Instrument	
Adjustment Page	C
Adjustment Address	40, 41, 42, 43, 5A

Adjustment procedure:

Order	Page	Address	Data	Procedure
1				Record any Subject for about one minute from the tape top.
2	1	C0	01	Set the data. (Preparation)
3	C	4B	8E	After setting the data, press the PAUSE button.
4	C	5A	00	After setting the data, press the PAUSE button.
5	C	40	C0	After setting the data, press the PAUSE button.
6	C	41	C0	After setting the data, press the PAUSE button.
7	C	42	90	After setting the data, press the PAUSE button.
8	C	43	90	After setting the data, press the PAUSE button.
9	3	3A		Confirm that the data is 06. (ME tape mode)
10				Rewind the tape and play it back from the tape top.
11	3	01	07	After RF envelope waveform is stabilized, set the data: 07 to this address and press the PAUSE button.
12	3	02		When about 20 to 30 seconds have elapsed after the PAUSE button is pressed, confirm that the data of address : 02 on page : 3 changes from "07" to "00".
13	3	03		Confirm that the address : 03 on page : 3 shows the following data. When "00": Normal When "01": Even channel is defective. When "02": ODD channel is defective. When "03": Even and ODD channels are defective. Only when "00" appears, proceed to the next step.
14	3	04 05 06 07		Read the data of the addresses : from 04 to 07 on page : 3. Take them as D_{04}, D_{05}, D_{06} and D_{07}.
15	C	40		Set D_{04} to this address and press the PAUSE button.
16	C	42		Set D_{05} to this address and press the PAUSE button.
17	C	41		Set D_{06} to this address and press the PAUSE button.
18	C	43		Set D_{07} to this address and press the PAUSE button.
19	C	5A	84	After setting the data, press the PAUSE button.
20	C	4B	0E	After setting the data, press the PAUSE button.

Processing after Adjustments:

Order	Page	Address	Data	Procedure
1	1	00	00	Set the data. (End)

3-5-2. Base band block adjustment

1. EVR data preset

Mode	VTR stop
Adjustment Page	D
Adjustment Address	48, 4A, 50, 51, 52, 53

Adjustment procedure:

Order	Page	Address	Data	Procedure
1	1	00	01	Set the data. (Preparation)
2	D	48	D0	Set data to each address and press the PAUSE button after each setting.
		4A	B3	
		50	3E	
		51	7C	
		52	5C	
		53	FF	
3	1	00	00	Set the data. (End)

2. AFC fo adjustment (CB-54P board)

Mode	Camera standby
Measurement Point	IC205 pin ⑨ (CL252) GND : CL215 (IC204 pin ㉗)
Measuring Instrument	Digital voltmeter
Adjustment	CT202
Specification Value	1.50 ± 0.05Vdc

Note : Confirm that pins from ㉚ to ㉜ on CN202 on the CB-54P board are in the following statuses :
Pin ㉚ (REC/PB) :"H" = 3 V
Pin ㉛ (INT/EXT) : "L"= 0 V
Pin ㉜ (EXT/INT) : "H" = 3 V

Adjustment procedure:

Order	Procedure
1	Adjust CT202 until the DC voltage satisfies the specification.

3. NPS fo adjustment (CB-54P board)

Mode	STOP (VTR mode)
Measurement Point	IC204 pin ㉘ (CL216) GND: CL215 (IC204 pin ㉗)
Measuring Instrument	Frequency counter
Adjustment	CT201
Specification Value	f = 17734476 ± 120Hz

Note 1 : Insert the plug to VIDEO OUT terminal.
Note 2 : Connect pin ⑬ of CN002and pin ㉝ of CN202.

Adjustment procedure:

Order	Procedure
1	Adjust CT201 until the frequency satisfies the specifications value.

4. D/A V Reference adjustment (CB-54P board)

Mode	Camera standby
Measurement Point	IC290 pin ㉞ (CL295) GND: CL291 (CN202 pin ㊾)
Measuring Instrument	Digital voltmeter
Adjustment Page	D
Adjustment Address	50
Specification Value	1.20 ± 0.02Vdc

Adjustment procedure:

Order	Page	Address	Data	Procedure
1	1	00	01	Set the data. (Preparation)
2	D	50	3E	After setting the data, press the PAUSE button.
3	D	50		Change the data until the output voltage satisfies the specification value.
4				Press the PAUSE button.
5	1	00	00	Set the data. (End)

5. S-Y output sync level adjustment (CB-54P board)

Purpose : Set the sync signal output level.
Adjustment error : The picture will be brighter or darker on monitor.

Mode	Camera E-E
Subject	Internal test pattern
Measurement Point	Y signal terminal of S VIDEO terminal (75Ω terminated)
Measuring Instrument	Oscilloscope
Adjustment Page	D
Adjustment Address	4D
Specification Value	A = 307 ± 6mVp-p

Fig. 6-3-12

Note : Insert the plug into the S video terminal.

Adjustment procedure:

Order	Page	Address	Data	Procedure
1	1	00	01	Set the data. (Preparation)
2	5	02	09	After setting the data, press the PAUSE button.
3	D	4D		Change the data until the sync signal level (A) satisfies the specification value.
4				Press the PAUSE button.
5	5	02	00	After setting the data, press the PAUSE button.
6	1	00	00	Set the data. (End)

6. S-Y output level adjustment (CB-54P board)

Purpose : Set the Y signal output level.
Adjustment error : The picture will be brighter or darker on monitor.

Mode	Camera E-E
Signal	Internal test pattern
Measurement Point	Y signal terminal of S VIDEO terminal (75Ω terminated)
Measuring Instrument	Oscilloscope
Adjustment Page	D
Adjustment Address	4C
Specification Value	A = 539 ± 10mVp-p

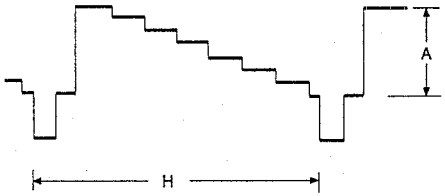

Fig. 6-3-13

Note : Insert the plug into the S video terminal.

Adjustment procedure:

Order	Page	Address	Data	Procedure
1	1	00	01	Set the data. (Preparation)
2	5	02	09	After setting the data, press the PAUSE button.
3	D	4C		Change the data until the Y signal level (A) satisfies the specification value.
4				Press the PAUSE button.
5	5	02	00	After setting the data, press the PAUSE button.
6	1	00	00	Set the data. (End)

7. S-C output chroma level adjustment (CB-54P board)

Purpose : Set the chroma signal output level.
Adjustment error : Color of the picture will be thicker or thinner on monitor.

Mode	Camera E-E
Subject	Internal test pattern
Measurement Point	Chroma signal terminal of S VIDEO terminal (75Ω terminated)
Measuring Instrument	Oscilloscope
Adjustment Page	D
Adjustment Address	4F
Specification Value	A = 487 ± 10mVp-p

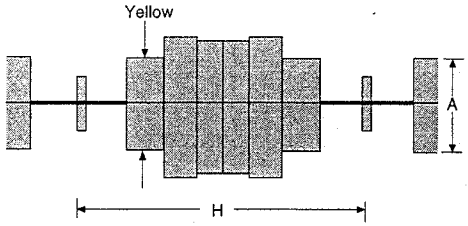

Fig. 6-3-14

Note : Insert the plug into the S video terminal.

Adjustment procedure:

Order	Page	Address	Data	Procedure
1	1	00	01	Set the data. (Preparation)
2	5	02	09	After setting the data, press the PAUSE button.
3	D	4F		Change the data until the yellow signal level (A) satisfies the specification.
4				Press the PAUSE button.
5	5	02	00	After setting the data, press the PAUSE button.
6	1	00	00	Set the data. (End)

8. S-C output burst level adjustment (CB-54P board)

Purpose : Set the burst signal output level.
Adjustment Error : Color of the picture will be thicker or thinner on monitor.

Mode	Camera E-E
Subject	Internal test pattern
Measurement Point	Chroma signal terminal of S VIDEO terminal (75Ω terminated)
Measuring Instrument	Oscilloscope
Adjustment Page	D
Adjustment Address	49
Specification Value	A = 315 ± 6mVp-p

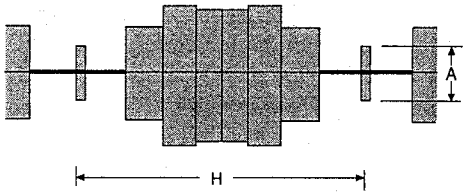

Fig. 6-3-15

Note : Insert the plug into the S video terminal.

Adjustment procedure:

Order	Page	Address	Data	Procedure
1	1	00	01	Set the data. (Preparation)
2	5	02	09	After setting the data, press the PAUSE button.
3	D	49		Change the data until the burst signal level (A) satisfies the specification.
4				Press the PAUSE button.
5	5	02	00	After setting the data, press the PAUSE button.
6	1	00	00	Set the data. (End)

9. Encoder R-Y input level adjustment (CB-54P board)

Purpose : Set the encoder balance.
Adjustment error : The encoder will have carrier leak and incorrect colorimetry

Mode	Camera E-E
Subject	Internal test pattern
Measurement Point	Chroma signal terminal of S VIDEO terminal (75Ω terminated)
Measuring Instrument	Oscilloscope
Adjustment Page	D
Adjustment Address	4A
Specification Value	RED Gain : 88.7 ± 2% (Note 3) RED Phase : 104 ± 2° (Note 4)

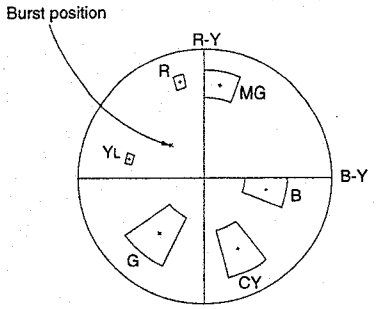

Fig. 6-3-15

Note 1 : Insert the plug to the S video terminal.
Note 2 : The "S-C output chroma level adjustment" and "S-C output burst level adjustment" must have already been completed before.
Note 3 : When the burst gain has been set to 40%.
Note 4 : When the burst phase has been set to 135°.

Adjustment procedure:

Order	Page	Address	Data	Procedure
1	1	00	01	Set the data. (Preparation)
2	5	02	09	After setting the data, press the PAUSE button.
3	D	4A		Change the data until the burst signal level (A) satisfies the specification.
4				Press the PAUSE button.
5	5	02	00	After setting the data, press the PAUSE button.
6	1	00	00	Set the data. (End)

Remarks : (Guide line of specification value.)
When using the PAL vectorscope, center values of specification correspond to the center of the specified range of each color.

10. Composite output level adjustment (CB-54P board)

Purpose : Set the composite signal output level.
Adjustment error : The picture will be brighter or darker on monitor.

Mode	Camera E-E
Subject	Internal test pattern
Measurement Point	VIDEO terminal (75Ω terminated)
Measuring Instrument	Oscilloscope
Adjustment Page	D
Adjustment Address	4E
Specification Value	A = 846 ± 15mVp-p

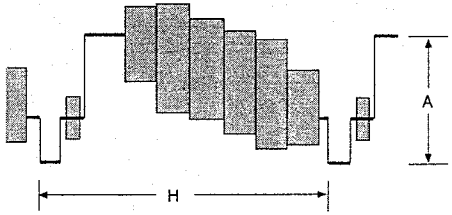

Fig. 6-3-16

Note : Insert the plug into the VIDEO terminal.

Adjustment procedure:

Order	Page	Address	Data	Procedure
1	1	00	01	Set the data. (Preparation)
2	5	02	09	After setting the data, press the PAUSE button.
3	D	4E		Change the data until the burst signal level (A) satisfies the specification.
4				Press the PAUSE button.
5	5	02	00	After setting the data, press the PAUSE button.
6	1	00	00	Set the data. (End)

11. Encoder sharpness adjustment (CB-54P board)

Purpose : Set sharpness of the Y signal output level.
Adjustment error : Sharpness of the output picture is too much or too dull on monitor.

Mode	Camera E-E
Subject	Any Subject
Measurement Point	CH-1 : IC294 pin ㉑ (CL323) GND : CL291 (CN202 pin ㊾) CH-2 : Y signal terminal of the S VIDEO output terminal (75Ω terminated)
Measuring Instrument	Oscilloscope
Adjustment Page	D
Adjustment Address	53
Specification Value	A = 40 ± 5mVp-p

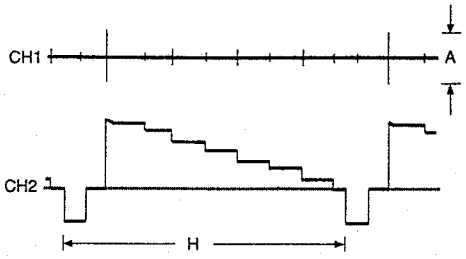

Fig. 6-3-17

Note : Insert the plug into the S video terminal.

Adjustment procedure:

Order	Page	Address	Data	Procedure
1	1	00	01	Set the data. (Preparation)
2	5	02	09	After setting the data, press the PAUSE button.
3	D	53		Change the data until the sync signal level (A) satisfies the specification.
4				Press the PAUSE button.
5	5	02	00	After setting the data, press the PAUSE button.
6	1	00	00	Set the data. (End)

5. LINE input distortion factor check

Purpose : Check distortion factor of the LINE system.

Mode	Camera mode record and playback
Signal	1kHz +2.2dBs signal : LINE IN input terminal left and right channels
Measurement Point	Audio output terminal, left and right channels
Measuring Instrument	Distortion level meter
Specification Value	0.09% or less (20kHz low-pass filter on)

Check procedure:

Order	Procedure
1	Input the 1kHz +2.2dBs signal to the LINE IN terminal.
2	Start recording in camera mode.
3	Playback the recorded segment.
4	Confirm that the distortion factor satisfies the specification value.

6. LINE input noise level check

Purpose : Check noise level of the LINE system.

Mode	Camera mode record and playback
Signal	No input signal : Connect a shorting plug to the LINE IN input terminal left and right channels.
Measurement Point	Audio output terminal, left and right channels
Measuring Instrument	Audio level meter
Specification Value	–75dBs or less (IHF-A filter on, 20kHz low-pass filter on)

Check procedure:

Order	Procedure
1	Connect a shorting plug to the LINE IN terminal. (Alternately short the LINE input with GND.)
2	Start recording in camera mode.
3	Playback the recorded segment.
4	Confirm that the noise level satisfies the specification value.

7. LINE input separation check

Purpose : Check channel separation of the LINE system.

Mode	Camera mode record and playback
Signal	1kHz +2.2dBs signal : LINE IN input terminal left channel only. (Connect the right channel of the EXT MIC input terminal with GND.)
Measurement Point	Audio output terminal, right channel
Measuring Instrument	Audio level meter
Specification Value	–70dBs or less (IHF-A filter on, 20 kHz low-pass filter on)

Check procedure:

Order	Procedure
1	Connect 1kHz, +2.2dBs signal to the left channel only of the LINE IN terminal. (Connect the right channel of the LINE input with GND.)
2	Start recording in camera mode.
3	Playback the recorded segment.
4	Confirm that the signal level of the right channel of the audio output terminal satisfies the specification value.

8. Audio after-recording playback check

Purpose : Check playback function of audio after-recording

Mode	Camera mode record and VTR playback
Signal	• MIC INPUT (L/R) ① 400Hz, –56dBs (normal recording mode) ② 1kHz, –56dBs (after-recording mode) Note
Measurement Point	Audio output terminal, right and left channels
Measuring Instrument	Oscilloscope
Specification Value	The mixed output of the 400Hz and 1kHz signals must be output.

Note : ① REC MODE (FK-68 board S401) 12bits

Check procedure:

Order	Procedure
1	Connect 400Hz, –56dBs signal to the EXT MIC IN terminal.
2	Start recording in camera mode.
3	Rewind the recorded tape to the start point of recording at step 2. (VTR mode)
4	Connect 1kHz, –56dBs signal to the EXT MIC IN terminal.
5	Press the PB button, then press the PAUSE immediately to enter the PAUSE mode.
6	Press the AUDIO DUB button.
7	Press the PAUSE button again to cancel the PAUSE mode. (Then after-recording starts.)
8	Playback the recorded segment.
9	Confirm that the mixed output of the 400Hz and 1kHz signals is output.

CB-54P board (Side A)

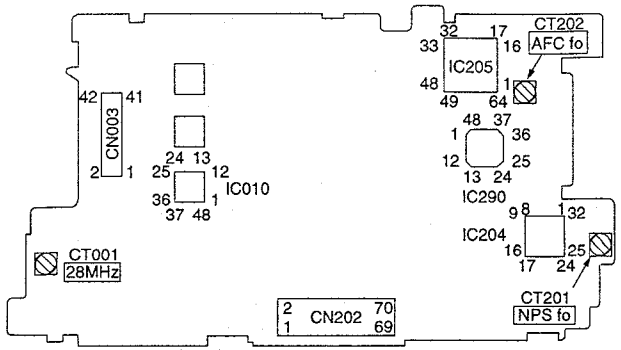

DD-75P board (Side A)

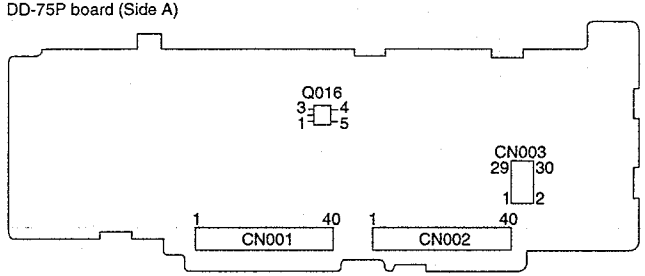

JC-15P board (Side A)

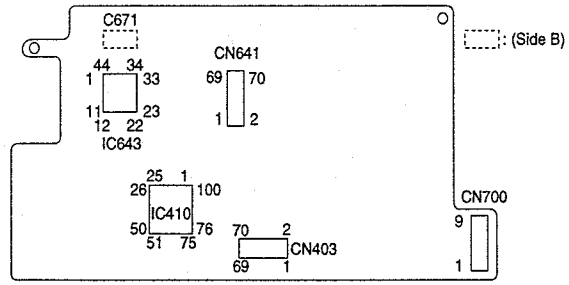

RS-73P board (Side A)

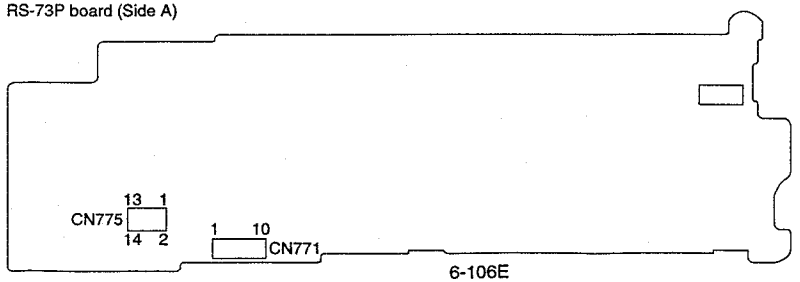

DCR-VX9000E

RMT-806/807

SONY

SERVICE MANUAL

AEP Model
UK Model
E Model

CORRECTION-1

Correct your service manual as shown below.

(96-039)

(P5-4)

5-1-4. EVF SECTION

: Points added parts. : Points changed parts.

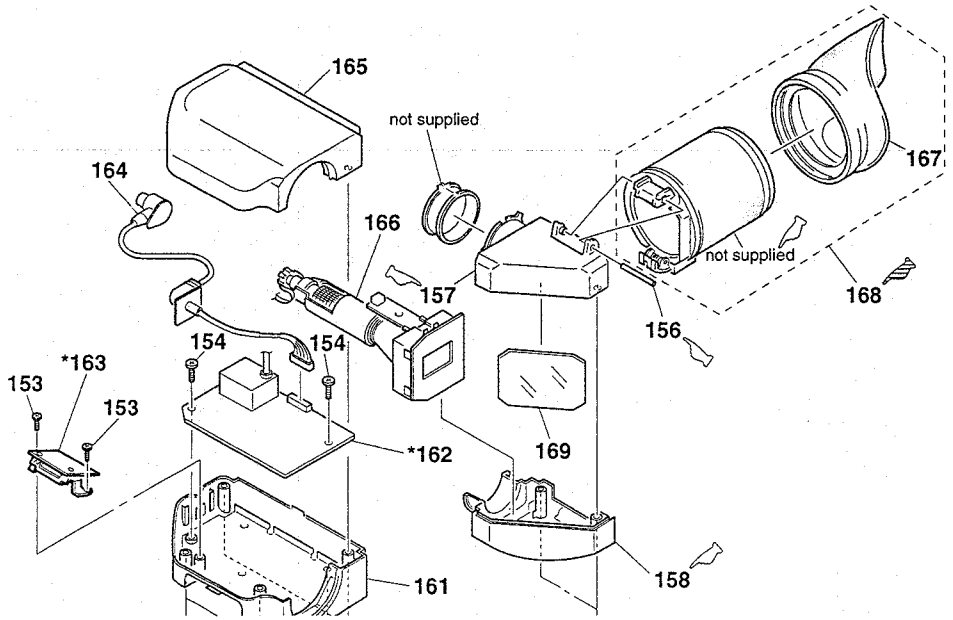

Ref. No.	Part.No.	Description
156	3-709-190-01	PIN
157	3-709-186-01	HOLDER (T) ASSY, OUT SIDE
158	3-709-187-01	HOLDER (B), OUT SIDE

Ref. No.	Part No.	Description
168	3-709-165-01	LENS ASSY

DCR-VX9000E

RMT-806/807

SONY

SERVICE MANUAL

AEP Model
UK Model
E Model

SUPPLEMENT-3

File this supplement with the Service Manual.

(99-011)

- MD bracket is changed from "not supplied" to a repair part for service.
- Changed of adjustment data.
- Correction of pad cover information on service manual.

<Page 5-8>

SECTION 5. REPAIR PARTS LIST

5-1-8. CABINET (L) SECTION

: Added portion, : Changed portion.

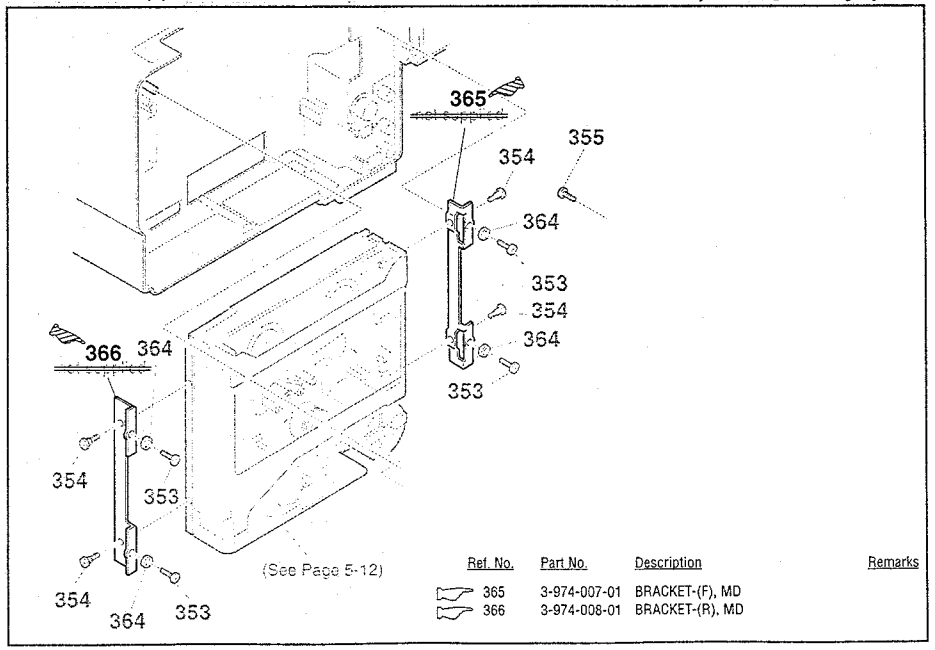

(See Page 5-12)

Ref. No.	Part No.	Description	Remarks
365	3-974-007-01	BRACKET-(F), MD	
366	3-974-008-01	BRACKET-(R), MD	

(P6-90)

3-5. VIDEO SYSTEM ADJUSTMENTS

3-5-1. RF block adjustment (RS-73P board)

Adjustment procedure:

Order	Page	Address	Data	Procedure
1				Calibrate the VERT gain of CH-1 and CH-2 of an oscilloscope for unity gain. Set the scope to ADD mode. Set CH-2 to INV mode.
2	1	00	01	Set the data. (Preparation)
3	3	01	0C	After setting the data, press the PAUSE button.
4	3	34	85	After setting the data, press the PAUSE button.
5	C	3F 3E		Change the following data until the signal voltage "A" satisfies the specification value and press the PAUSE button. For odd channel : Address : 3F on page C For even channel : Address : 3E on page C.
6	3	34	84	After setting the data, press the PAUSE button.
7				Check that the signal voltage "A" of odd and even channels satisfies the specification value.

(P6-95)

6. AEQ adjustment (RS-73P board)

Adjustment procedure:

Order	Page	Address	Data	Procedure
1				Record any Subject for about one minute from the tape top.
2	1	00	01	Set the data. (Preparation)
3	C	4B	8E	After setting the data, press the PAUSE button.
4	C	5A	00	After setting the data, press the PAUSE button.
5	C	40	C0	After setting the data, press the PAUSE button.
6	C	41	C0	After setting the data, press the PAUSE button.
7	C	42	90	After setting the data, press the PAUSE button.
8	C	43	90	After setting the data, press the PAUSE button.
9	~~3~~	~~3A~~		~~Confirm that the data is 06. (ME tape mode)~~

(P6-100)

10. Composite output level adjustment (CB-54P board)

Adjustment procedure:

Order	Page	Address	Data	Procedure
1	1	00	01	Set the data. (Preparation)
2	5	02	09	After setting the data, press the PAUSE button.
3	D	4E		Change the data until the white (75%) signal level (A) satisfies the specification.
4				Press the PAUSE button.
5	5	02	00	After setting the data, press the PAUSE button.
6	1	00	00	Set the data. (End)

(P6-104)

3-6-2. Audio system adjustment.

1. Audio PLL VCO oscillating frequency check (JC-15P board)

Purpose : Check the audio PLL VCO oscillating frequency.

Mode	VTR PB (48 kHz PB)
Signal	Alignment playback
Measurement Point	CN641 pin ㉙ (CL645) (MCLK) or AU-192 board IC011 pin ⑪
Measuring Instrument	Frequency counter
Specification Value	11.7 ± 0.6MHz

Note : Connect 2.3Vdc between C671 (CL669) and GND (C671 (CL670)).

(P6-105)

7. LINE input separation check

Purpose : Check channel separation of the LINE system.

Mode	Camera mode record and playback
Signal	1kHz +2.2dBs signal : LINE IN input terminal left channel only. (Connect the right channel of the LINE input terminal with GND.)
Measurement Point	Audio output terminal, right channel
Measuring Instrument	Audio level meter
Specification Value	–70dBs or less (IHF-A filter on, 20 kHz low-pass filter on)

DCR-VX9000E

• Replace the your manual with this page.

FOR CAMERA COLOR REPRODUCTION ADJUSTMENT

Take a copy of CAMERA COLOR REPRODUCTION FRAME and Parts referencesheets with a clear sheet for use.

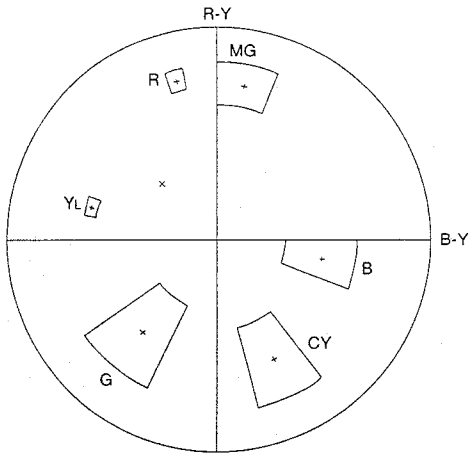

DCR-VX9000E

⟨PARTS REFERENCE SHEET⟩

You can find the parts position of location of mount locations applying to CB-54P board of a set.

CB-54P DCR-VX9000E SIDE A

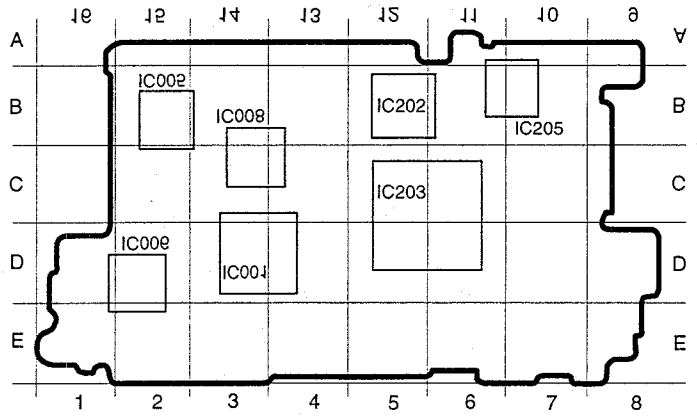

SIDE B DCR-VX9000E CB-54P

9-973-914-91

Sony Corporation
Personal A&V Products Company

97A1666-1
Printed in Japan © 1997.1
Published by Quality Engineering Dept.
(Osaki East)

⟨PARTS REFERENCE SHEET⟩

You can find the parts position of location of mount locations applying to AU-192 and JC-15P boards of a set.

AU-192 DCR-VX9000E SIDE A

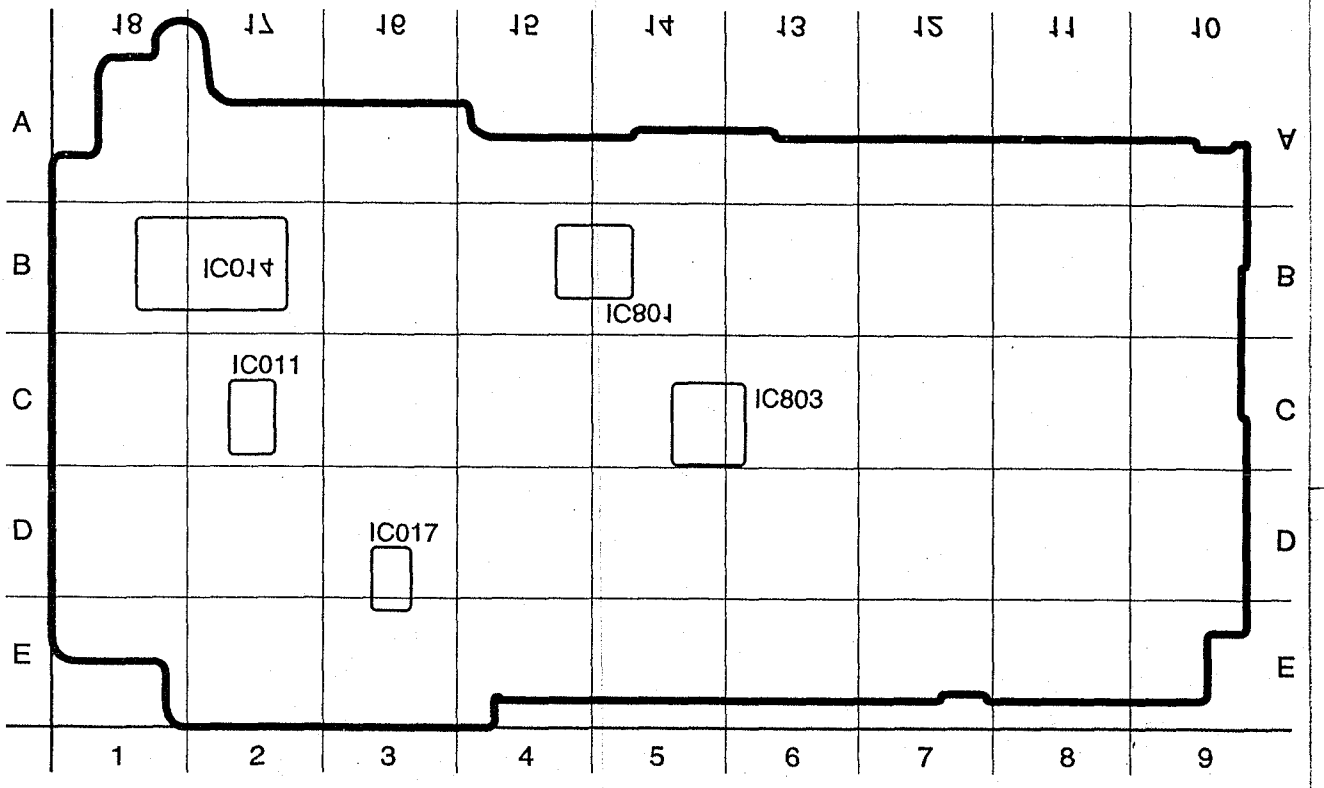

SIDE B DCR-VX9000E AU-192

JC-15P DCR-VX9000E SIDE A

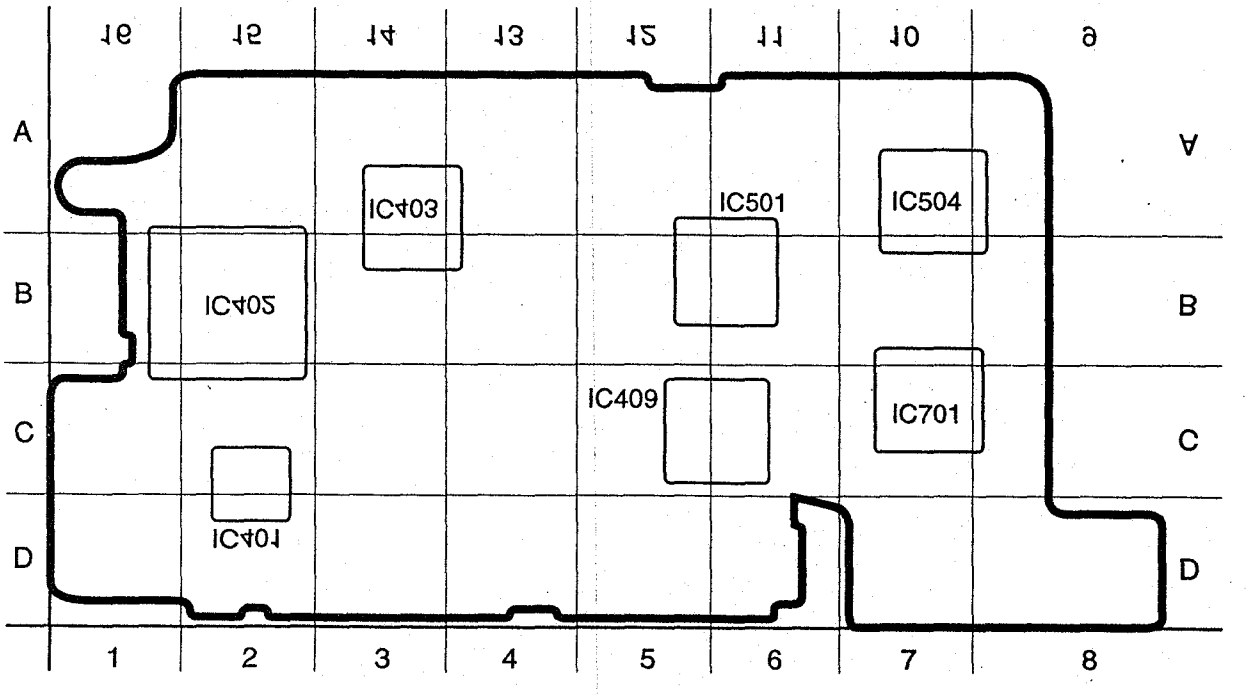

SIDE B DCR-VX9000E JC-15P

FOR CAMERA COLOR REPRODUCTION ADJUSTMENT

Take a copy of CAMERA COLOR REPRODUCTION FRAME and Parts referencesheets with a clear sheet for use.

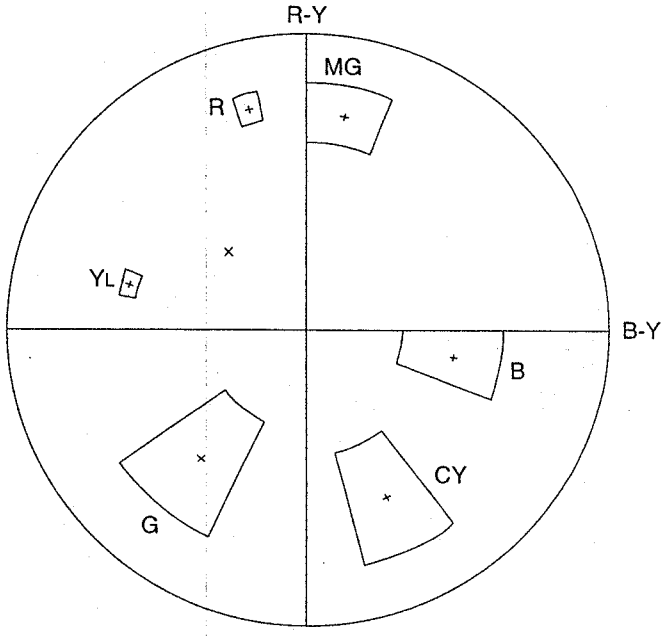

DCR-VX9000E

⟨PARTS REFERENCE SHEET⟩

You can find the parts position of location of mount locations applying to CB-54P board of a set.

CB-54P DCR-VX9000E SIDE A

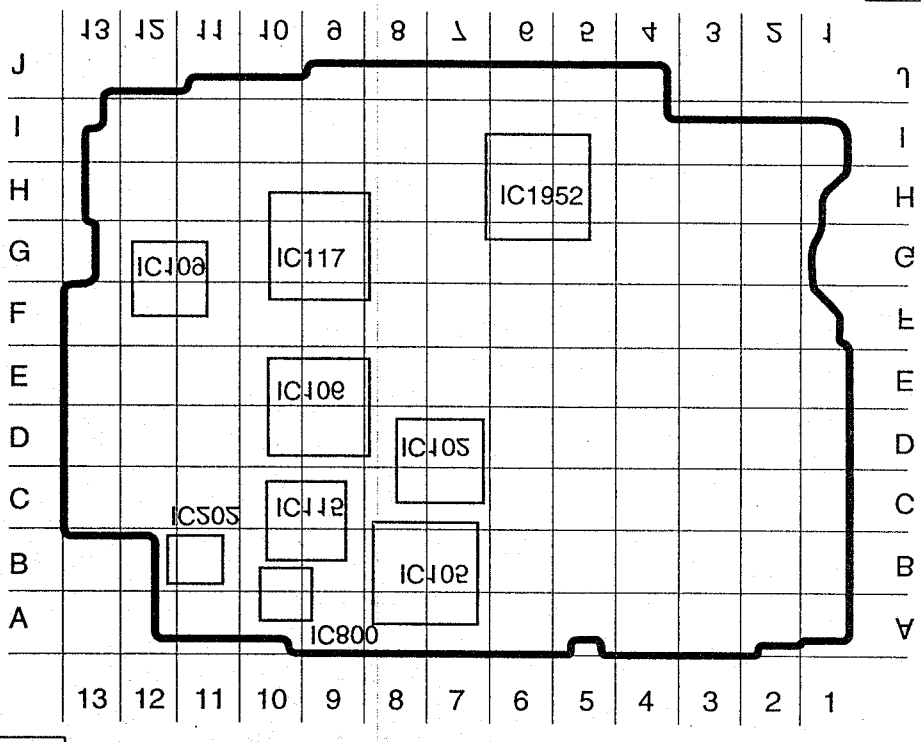

SIDE B DCR-VX9000E CB-54P